FAIRVIEW CAMPUS

New Middle School and High School

Tony Marchio Drive
Townsend, DE 19734

\

BID PAC 'C-D'

Volume 2 of 3
DIVISION 2- 14
Date: January 24, 2018

TABLE OF CONTENTS

DIVISION 03 - CONCRETE

03 3000 CAST-IN-PLACE CONCRETE
03 4900 GLASS-FIBER REINFORCED CONCRETE

DIVISION 04 - MASONRY

04 2000 UNIT MASONRY
04 4301 STONE MASONRY VENEER
04 7200 CAST STONE MASONRY
04 7313 CALCIUM SILICATE MANUFACTURED STONE MASONRY

DIVISION 05 - METALS

05 1200 STRUCTURAL STEEL
05 2100 STEEL JOISTS
05 3100 STEEL DECK
05 4000 COLD-FORMED METAL FRAMING
05 4400 COLD-FORMED METAL TRUSSES
05 5000 METAL FABRICATIONS
05 5100 METAL STAIRS
05 5213 PIPE AND TUBE RAILINGS
05 5305 GRATINGS AND FLOOR PLATES
05 5800 ARCHITECTURAL METAL COLUMN COVERS
05 7000 DECORATIVE METAL

DIVISION 06 - WOOD, PLASTICS, AND COMPOSITES

06 1000 ROUGH CARPENTRY
06 2000 FINISH CARPENTRY
06 6500 PLASTIC SIMULATED WOOD TRIM

DIVISION 07 - THERMAL AND MOISTURE PROTECTION

07 1113 BITUMINOUS DAMPPROOFING
07 1300 SHEET WATERPROOFING
07 2100 THERMAL INSULATION
07 2400 EXTERIOR INSULATION AND FINISH SYSTEMS
07 2500 WEATHER BARRIERS
07 2616 UNDER-SLAB VAPOR BARRIER/RETARDER
07 2640 SPRAY POLYURETHANE FOAM INSULATING AIR BARRIER
07 3113 ASPHALT SHINGLES
07 4113 METAL ROOF PANELS
07 4213 METAL WALL PANELS
07 5300 ELASTOMERIC MEMBRANE ROOFING
07 6200 SHEET METAL FLASHING AND TRIM
07 7100 ROOF SPECIALTIES
07 7123 MANUFACTURED GUTTERS AND DOWNSPOUTS
07 7200 ROOF ACCESSORIES
07 8100 APPLIED FIREPROOFING
07 8123 INTUMESCENT MASTIC FIREPROOFING

07 8400	FIRESTOPPING
07 9200	JOINT SEALANTS
07 9513	EXPANSION JOINT COVER ASSEMBLIES

DIVISION 08 - OPENINGS

08 0671	HARDWARE SETS
08 1113	HOLLOW METAL DOORS AND FRAMES
08 1416	FLUSH WOOD DOORS
08 1613	FRP FLUSH DOORS
08 1700	INTEGRATED DOOR OPENING ASSEMBLIES
08 3100	ACCESS DOORS AND PANELS
08 3323	OVERHEAD COILING DOORS
08 3326	OVERHEAD COILING GRILLES
08 3473	ACOUSTICAL DOORS AND FRAMES
08 4313	ALUMINUM-FRAMED STOREFRONTS
08 4413	GLAZED ALUMINUM CURTAIN WALLS
08 4500	TRANSLUCENT WALL ASSEMBLIES
08 5113	ALUMINUM WINDOWS
08 5674	ACOUSTICALLY RATED CONTROL ROOM WINDOWS
08 7100	DOOR HARDWARE
08 8000	GLAZING
08 9100	LOUVERS

DIVISION 09 - FINISHES

09 0561	COMMON WORK RESULTS FOR FLOORING PREPARATION
09 2116	GYPSUM BOARD ASSEMBLIES
09 3000	TILING
09 5100	ACOUSTICAL CEILINGS
09 5420	SPECIALTY CEILING SYSTEMS
09 6429	WOOD STRIP FLOORING
09 6500	RESILIENT FLOORING
09 6566	RESILIENT ATHLETIC FLOORING
09 6616	PRECAST CEMENT TERRAZZO TREADS AND LANDINGS
09 6633	CEMENT TERRAZZO TILES
09 6700	TROWELED SEAMLESS FLOORING
09 6813	TILE CARPETING
09 8100	ACOUSTICAL INSULATION
09 8400	ACOUSTIC ROOM COMPONENTS
09 9000	PAINTS AND COATINGS

DIVISION 10 - SPECIALTIES

10 1101	VISUAL DISPLAY BOARDS AND DISPLAY CASES
10 2113	PLASTIC TOILET COMPARTMENTS
10 2123	CUBICLE CURTAINS
10 2239	FOLDING PANEL PARTITIONS
10 2310	GLAZED INTERIOR WALL AND DOOR ASSEMBLIES
10 2601	CORNER GUARDS
10 2800	TOILET ACCESSORIES
10 4400	FIRE PROTECTION SPECIALTIES

10 5100	METAL LOCKERS

DIVISION 11 - EQUIPMENT

11 1300	LOADING DOCK EQUIPMENT
11 2300	COMMERCIAL LAUNDRY EQUIPMENT
11 4000	FOODSERVICE EQUIPMENT
11 5313	FUME HOODS
11 5415	KILNS
11 6113	ORCHESTRA SHELL
11 6213	DEMOUNTABLE PLATFORMS
11 6133	RIGGING SYSTEMS
11 6625	GYMNASIUM EQUIPMENT

DIVISION 12 - FURNISHINGS

12 2413	WINDOW TREATMENT – ROLLER SHADES
12 3400	LAMINATE CLAD CASEWORK
12 3553.19	WOOD LABORATORY CASEWORK
12 3583	SPECIALTY CASEWORK
12 3600	COUNTERTOPS, BACKSPLASHES AND WINDOW STOOLS
12 6113	FIXED AUDIENCE SEATING
12 6613	TELESCOPING BLEACHERS
12 6623	TELESCOPING CHAIR PLATFORMS
12 9313	BICYCLE RACKS

DIVISION 13 - SPECIAL CONSTRUCTION

13 3420	METAL CUPOLA

DIVISION 14 - CONVEYING EQUIPMENT

14 2013	HYDRAULIC HOLELESS PASSENGER ELEVATOR
14 2100	MACHINE ROOM-LESS (MRL) TRACTION ELEVATORS
14 4216	VERTICAL WHEELCHAIR LIFTS
14 4313	ORCHESTRA LIFT

DIVISION 21 - FIRE SUPPRESSION

210170	NEW – FIRE SUPPRESSION SPRINKLER SYSTEM
210171	FIRE PUMP – ELECTRIC

DIVISION 22 - PLUMBING

220000	GENERAL PROVISIONS – PLUMBING/FIRE PROTECTION
220010	BASIC MATERIALS AND METHODS – PLUMBING
220030	INSULATION & COVERING – PLUMBING
220110	DRAINAGE SYSTEMS – PLUMBING
220120	DOMESTIC WATER SYSTEMS – PLUMBING
220130	GAS PIPING SYSTEMS – PLUMBING
220140	FIXTURES – PLUMBING
220150	EQUIPMENT – PLUMBING
220190	TESTING – PLUMBING
220191	BALANCING – PLUMBING

DIVISION 23 - HVAC

230200	GENERAL PROVISIONS – HVAC
230210	BASIC MATERIALS AND METHODS – HVAC
230215	VALVES
230230	INSULATION & COVERING – HVAC
230300	VIBRATION ISOLATION – HVAC
230400	HEATING GENERATION EQUIPMENT
230410	HEATING GENERATION AUXILIARY EQUIPMENT
230450	REFRIGERATION EQUIPMENT – HVAC
230500	PIPING SYSTEMS & ACCESSORIES – HVAC
230510	WATER TREATMENT (HVAC)
230600	AIR DISTRIBUTION & ACCESSORIES – HVAC
230605	FANS
230725	TERMINAL HEATING UNITS
230760	AIR HANDLING EQUIPMENT
230861	AIR PURIFICATION SYSTEM
230900	AUTOMATIC TEMPERATURE CONTROLS (DDC)
230950	TESTING & BALANCING OF MECHANICAL SYSTEMS

DIVISION 26 - ELECTRICAL

260000	GENERAL PROVISIONS – ELECTRICAL
260055	ELECTRICAL IDENTIFICATION
260110	RACEWAYS
260120	WIRES AND CABLES
260130	MANHOLES
260135	ELECTRICAL BOXES & FITTINGS
260140	WIRING DEVICES
260155	MOTOR STARTERS
260156	ADJUSTABLE FREQUENCY DRIVES
260160	PANELBOARDS
260165	SWITCHBOARDS
260170	MOTOR AND CIRCUIT DISCONNECTS
260180	OVERCURRENT PROTECTIVE DEVICES
260190	SUPPORTING DEVICES
260195	POWER SYSTEM STUDIES
260430	METERING EQUIPMENT
260444	PAD-MOUNTED PRIMARY LOAD INTERRUPTER
260452	GROUNDING
260460	TRANSFORMERS
260470	DISTRIBUTION CIRCUITS
260471	FEEDER CIRCUITS
260472	BRANCH CIRCUITS
260475	ELEVATOR ELECTRICAL SYSTEMS
260510	BUILDING LIGHTING
260520	ROADWAY & PARKING AREA LIGHTING
260601	LIGHTNING PROTECTION SYSTEMS
260606	AUTOMATIC TRANSFER SWITCHES
260612	EMERGENCY GENERATOR SYSTEMS
260731	WIRELESS CLOCK SYSTEM
260740	NETWORK CABLING SYSTEMS (DCET) SCHOOLS
260771	INTERCOM/TELEPHONE COMMUNICATIONS SYSTEM
260851	HEATING TERMINALS
260961	PERFORMANCE LIGHTING SYSTEMS
260963	PERFORMANCE LIGHTING SYSTEMS INSTALLATION

262861 COMPANY SWITCHES
266010 RIGGING SYSTEM ELECTRICAL WORK

DIVISION 27 - COMMUNICATIONS

274117 SOUND, VIDEO & COMMUNICATION SYSTEMS

DIVISION 28 - ELECTRONIC SAFETY AND SECURITY

280721 FIRE ALARM AND DETECTION SYSTEMS
280724 AREA RESCUE SYSTEM
280725 INTRUSION DETECTION SYSTEM
280727 INTEGRATED ACCESS CONTROL & SECURITY MANAGEMENT SYSTEM
280728 CCTV-NETWORK DIGITAL VIDEO MANAGEMENT SYSTEM

DIVISION 32 - EXTERIOR IMPROVEMENTS

32 3119 DECORATIVE METAL FENCES AND GATES

SECTION 033000 - CAST-IN-PLACE CONCRETE

PART 1 - GENERAL

1.1 RELATED DOCUMENTS

A. Drawings and general provisions of the Contract, including General and Supplementary Conditions and Division 1 Specification Sections, apply to this Section.

1.2 SUMMARY

A. This Section specifies cast-in place concrete, including formwork, reinforcement, concrete materials, mixture design, placement procedures, and finishes, for the following:

1. Footings.
2. Foundation walls.
3. Slabs-on-grade.
4. Suspended slabs.

B. Related Sections include the following:

1. Division 2 Section "Earthwork" for drainage fill under slabs-on-grade.
2. Division 2 Section "Cement Concrete Pavement" for concrete pavement and walks.
3. Division 2 Section "Decorative Cement Concrete Pavement" for decorative concrete pavement and walks.

1.3 DEFINITIONS

A. Cementitious Materials: Portland cement alone or in combination with one or more of the following: blended hydraulic cement, fly ash and other pozzolans, ground granulated blast-furnace slag, and silica fume; subject to compliance with requirements.

1.4 SUBMITTALS

A. Product Data: For each type of product indicated.

B. Design Mixtures: For each concrete mixture. Submit alternate design mixtures when characteristics of materials, Project conditions, weather, test results, or other circumstances warrant adjustments.

1. Indicate amounts of mixing water to be withheld for later addition at Project site.

C. Steel Reinforcement Shop Drawings: Placing drawings that detail fabrication, bending, and placement. Include bar sizes, lengths, material, grade, bar schedules, stirrup spacing, bent bar diagrams, bar arrangement, splices and laps, mechanical connections, tie spacing, hoop spacing, and supports for concrete reinforcement.

D. Samples: For waterstops and vapor retarder.

E. Welding certificates.

F. Qualification Data: For Installer, manufacturer, testing agency.

G. Material Test Reports: For the following, from a qualified testing agency, indicating compliance with requirements:

1. Aggregates.

H. Material Certificates: For each of the following, signed by manufacturers:

1. Cementitious materials.
2. Admixtures.
3. Form materials and form-release agents.
4. Steel reinforcement and accessories.
5. Waterstops.
6. Curing compounds.
7. Floor and slab treatments.
8. Bonding agents.
9. Adhesives.
10. Vapor retarders.
11. Semirigid joint filler.
12. Joint-filler strips.
13. Repair materials.

I. Floor surface flatness and levelness measurements to determine compliance with specified tolerances.

J. Field quality-control test reports.

K. Minutes of preinstallation conference.

1.5 QUALITY ASSURANCE

A. Installer Qualifications: A qualified installer who employs on Project personnel qualified as ACI-certified Flatwork Technician and Finisher and a supervisor who is an ACI-certified Concrete Flatwork Technician.

B. Manufacturer Qualifications: A firm experienced in manufacturing ready-mixed concrete products and that complies with ASTM C 94/C 94M requirements for production facilities and equipment.

1. Manufacturer certified according to NRMCA's "Certification of Ready Mixed Concrete Production Facilities."

C. Testing Agency Qualifications: An independent agency, acceptable to authorities having jurisdiction, qualified according to ASTM C 1077 and ASTM E 329 for testing indicated, as documented according to ASTM E 548.

1. Personnel conducting field tests shall be qualified as ACI Concrete Field Testing Technician, Grade 1, according to ACI CP-01 or an equivalent certification program.
2. Personnel performing laboratory tests shall be ACI-certified Concrete Strength Testing Technician and Concrete Laboratory Testing Technician - Grade I. Testing Agency laboratory supervisor shall be an ACI-certified Concrete Laboratory Testing Technician - Grade II.

D. Source Limitations: Obtain each type or class of cementitious material of the same brand from the same manufacturer's plant, obtain aggregate from one source, and obtain admixtures through one source from a single manufacturer.

E. Welding: Qualify procedures and personnel according to AWS D1.4, "Structural Welding Code--Reinforcing Steel."

F. ACI Publications: Comply with the following unless modified by requirements in the Contract Documents:

1. ACI 301, "Specification for Structural Concrete,"
2. ACI 117, "Specifications for Tolerances for Concrete Construction and Materials."

G. Concrete Testing Service: Engage a qualified independent testing agency to perform material evaluation tests and to design concrete mixtures.

H. Preinstallation Conference: Conduct conference at Project site to comply with requirements in Division 1 Section "Project Management and Coordination."

1. Before submitting design mixtures, review concrete design mixture and examine procedures for ensuring quality of concrete materials. Require representatives of each entity directly concerned with cast-in-place concrete to attend, including the following:

   a. Contractor's superintendent.
   b. Independent testing agency responsible for concrete design mixtures.
   c. Ready-mix concrete manufacturer.
   d. Concrete subcontractor.

2. Review special inspection and testing and inspecting agency procedures for field quality control, concrete finishes and finishing, cold- and hot-weather concreting procedures, [curing procedures, construction contraction and isolation joints, and joint-filler strips, forms and form removal limitations, vapor-retarder installation, steel reinforcement installation, floor and slab flatness and levelness measurement**,** and concrete protection.

1.6 DELIVERY, STORAGE, AND HANDLING

A. Steel Reinforcement: Deliver, store, and handle steel reinforcement to prevent bending and damage.

B. Waterstops: Store waterstops under cover to protect from moisture, sunlight, dirt, oil, and other contaminants.

PART 2 - PRODUCTS

2.1 MANUFACTURERS

A. In other Part 2 articles where titles below introduce lists, the following requirements apply to product selection:

1. Available Products: Subject to compliance with requirements, products that may be incorporated into the Work include, but are not limited to, products specified.
2. Available Manufacturers: Subject to compliance with requirements, manufacturers offering products that may be incorporated into the Work include, but are not limited to, manufacturers specified.

2.2 FORM-FACING MATERIALS

A. Smooth-Formed Finished Concrete: Form-facing panels that will provide continuous, true, and smooth concrete surfaces. Furnish in largest practicable sizes to minimize number of joints.

1. Plywood, metal, or other approved panel materials.
2. Exterior-grade plywood panels, suitable for concrete forms, complying with DOC PS 1, and as follows:

a. High-density overlay, Class 1 or better.

B. Rough-Formed Finished Concrete: Plywood, lumber, metal, or another approved material. Provide lumber dressed on at least two edges and one side for tight fit.

C. Chamfer Strips: Wood, metal, PVC, or rubber strips, 3/4 by 3/4 inch (19 by 19 mm), minimum.

D. Form-Release Agent: Commercially formulated form-release agent that will not bond with, stain, or adversely affect concrete surfaces and will not impair subsequent treatments of concrete surfaces.

1. Formulate form-release agent with rust inhibitor for steel form-facing materials.

E. Form Ties: Factory-fabricated, removable or snap-off metal or glass-fiber-reinforced plastic form ties designed to resist lateral pressure of fresh concrete on forms and to prevent spalling of concrete on removal.

1. Furnish units that will leave no corrodible metal closer than 1 inch (25 mm) to the plane of exposed concrete surface.
2. Furnish ties that, when removed, will leave holes no larger than 1 inch (25 mm) in diameter in concrete surface.
3. Furnish ties with integral water-barrier plates to walls indicated to receive dampproofing or waterproofing.

2.3 STEEL REINFORCEMENT

A. Reinforcing Bars: ASTM A 615/A 615M, Grade 60 (Grade 420), deformed.

B. Steel Bar Mats: ASTM A 184/A 184M, fabricated from ASTM A 615/A 615M, Grade 60 (Grade 420) , deformed bars, assembled with clips.

C. Plain-Steel Welded Wire Reinforcement: ASTM A 185, plain, fabricated from as-drawn steel wire into flat sheets.

2.4 REINFORCEMENT ACCESSORIES

A. Joint Dowel Bars: ASTM A 615/A 615M, Grade 60 (Grade 420), plain-steel bars, cut bars true to length with ends square and free of burrs.

B. Bar Supports: Bolsters, chairs, spacers, and other devices for spacing, supporting, and fastening reinforcing bars and welded wire reinforcement in place. Manufacture bar supports from steel wire, plastic, or precast concrete according to CRSI's "Manual of Standard Practice," of greater compressive strength than concrete and as follows:

1. For concrete surfaces exposed to view where legs of wire bar supports contact forms, use CRSI Class 1 plastic-protected steel wire or CRSI Class 2 stainless-steel bar supports.

2.5 CONCRETE MATERIALS

A. Cementitious Material: Use the following cementitious materials, of the same type, brand, and source, throughout Project:

1. Portland Cement: ASTM C 150, Type I/II, gray. Supplement with the following:

a. Fly Ash: ASTM C 618, Class C.
b. Ground Granulated Blast-Furnace Slag: ASTM C 989, Grade 100 or 120.

B. Silica Fume: ASTM C 1240, amorphous silica.

C. Normal-Weight Aggregates: ASTM C 33, Class 3S coarse aggregate or better, graded. Provide aggregates from a single source.

1. Maximum Coarse-Aggregate Size: 1 inch (25 mm) nominal.

2. Fine Aggregate: Free of materials with deleterious reactivity to alkali in cement.

D. Water: ASTM C 94/C 94M and potable.

2.6 ADMIXTURES

A. Air-Entraining Admixture: ASTM C 260.

B. Chemical Admixtures: Provide admixtures certified by manufacturer to be compatible with other admixtures and that will not contribute water-soluble chloride ions exceeding those permitted in hardened concrete. Do not use calcium chloride or admixtures containing calcium chloride.

1. Water-Reducing Admixture: ASTM C 494/C 494M, Type A.
2. Retarding Admixture: ASTM C 494/C 494M, Type B.
3. High-Range, Water-Reducing Admixture: ASTM C 494/C 494M, Type F.
4. Plasticizing and Retarding Admixture: ASTM C 1017/C 1017M, Type II.

C. Set-Accelerating Corrosion-Inhibiting Admixture: Commercially formulated, anodic inhibitor or mixed cathodic and anodic inhibitor; capable of forming a protective barrier and minimizing chloride reactions with steel reinforcement in concrete and complying with ASTM C 494/C 494M, Type C. Provide at exterior concrete slabs.

1. Products:

a. Boral Material Technologies, Inc.; Boral BCN.
b. Euclid Chemical Company (The); Eucon CIA.
c. Grace Construction Products, W. R. Grace & Co.; DCI.
d. Master Builders, Inc.; Rheocrete CNI.
e. Sika Corporation; Sika CNI.

D. Non-Set-Accelerating Corrosion-Inhibiting Admixture: Commercially formulated, non-set-accelerating, anodic inhibitor or mixed cathodic and anodic inhibitor; capable of forming a protective barrier and minimizing chloride reactions with steel reinforcement in concrete. Provide at exterior concrete slabs.

1. Products:

a. Axim Concrete Technologies; Catexol 1000CI.
b. Boral Material Technologies, Inc.; Boral BCN2.
c. Grace Construction Products, W. R. Grace & Co.; DCI-S.
d. Master Builders, Inc.; Rheocrete 222+.
e. Sika Corporation; FerroGard-901.

E. Color Pigment: ASTM C 979, synthetic mineral-oxide pigments or colored water-reducing admixtures; color stable, free of carbon black, nonfading, and resistant to lime and other alkalis.

1. Manufacturers:

a. Bayer Corporation.
b. ChemMasters.
c. Conspec Marketing & Manufacturing Co., Inc.; a Dayton Superior Company.
d. Davis Colors.
e. Elementis Pigments, Inc.
f. Hoover Color Corporation.
g. Lambert Corporation.
h. Scofield, L. M. Company.
i. Solomon Colors.

2. Color: As selected by Architect from manufacturer's full range.

2.7 WATERSTOPS

A. Self-Expanding Butyl Strip Waterstops: Manufactured rectangular or trapezoidal strip, butyl rubber with sodium bentonite or other hydrophilic polymers, for adhesive bonding to concrete, 3/4 by 1 inch (19 by 25 mm).

1. Products:

a. Colloid Environmental Technologies Company; Volclay Waterstop-RX.
b. Approved equal

2.8 VAPOR RETARDERS

A. Plastic Vapor Retarder: ASTM E 1745, Class C**,** or polyethylene sheet, ASTM D 4397, not less than 10 mils (0.25 mm) thick. Include manufacturer's recommended adhesive or pressure-sensitive joint tape.

1. Products:

a. Fortifiber Corporation; Moistop Plus.
b. Raven Industries Inc.; Dura Skrim 8.
c. Reef Industries, Inc.; Griffolyn Type-85.
d. Stego Industries, LLC; Stego Wrap, 10 mils.

B. Granular Fill: Clean mixture of crushed stone or crushed or uncrushed gravel; ASTM D 448, Size 57, with 100 percent passing a 1-1/2-inch (37.5-mm) sieve and 0 to 5 percent passing a No. 8 (2.36-mm) sieve.

2.9 FLOOR AND SLAB TREATMENTS

A. Penetrating Liquid Floor Treatment: Provide at all exposed concrete surfaces to be treated to harden, seal and densify exposed concrete. Clear, chemically reactive, waterborne solution of inorganic silicate or siliconate materials and proprietary components; odorless; colorless; that penetrates, hardens, and densifies concrete surfaces.

1. Products:
   a. Dayton Superior Corporation; Day-Chem Sure Hard.
   b. Euclid Chemical Company (The); Euco Diamond Hard.
   c. L&M Construction Chemicals, Inc.; Seal Hard.
   d. Meadows, W. R., Inc.; Liqui-Hard.

B. Stained Hardener with matching cure/sealer - Pigmented Mineral Dry-Shake Floor Hardener: Factory-packaged, dry combination of portland cement, graded quartz aggregate, color pigments, and plasticizing admixture. Use color pigments that are finely ground, nonfading mineral oxides interground with cement. Placing of hardener is followed by manufacturer's recommended water membrane-forming cure and seal: ASTM C 309

1. Products:
   a. L&M Construction Chemicals, Inc.; Quartz Plate FF Hardener followed by Dress & Seal WB 30 per manufacturer's recommendations and specifications.
   b. Scofield, L. M. Company; Lithochrome Color Hardener followed by Lithochrome Colorwax in matching color per manufacturer's recommendations and specifications.

2.10 CURING MATERIALS

A. Evaporation Retarder: Waterborne, monomolecular film forming, manufactured for application to fresh concrete.

1. Products:
   a. Conspec Marketing & Manufacturing Co., Inc., a Dayton Superior Company; Aquafilm.
   b. Dayton Superior Corporation; Sure Film.
   c. Euclid Chemical Company (The); Eucobar.
   d. L&M Construction Chemicals, Inc.; E-Con.
   e. Meadows, W. R., Inc.; Sealtight Evapre.
   f. Sika Corporation, Inc.; SikaFilm.

B. Absorptive Cover: AASHTO M 182, Class 2, burlap cloth made from jute or kenaf, weighing approximately 9 oz./sq. yd. (305 g/sq. m) when dry.

C. Moisture-Retaining Cover: ASTM C 171, polyethylene film or white burlap-polyethylene sheet.

D. Water: Potable.

E. Clear, Waterborne, Membrane-Forming Curing Compound: ASTM C 309, Type 1, Class B, dissipating.

1. Products:
   a. Dayton Superior Corporation; Day Chem Rez Cure (J-11-W).
   b. Euclid Chemical Company (The); Kurez DR VOX.
   c. L&M Construction Chemicals, Inc.; L&M Cure R.

d. Meadows, W. R., Inc.; 1100 Clear.
e. Tamms Industries, Inc.; Horncure WB 30.

2.11 RELATED MATERIALS

A. Expansion- and Isolation-Joint-Filler Strips: ASTM D 1751, asphalt-saturated cellulosic fiber or ASTM D 1752, cork or self-expanding cork.

B. Bonding Agent: ASTM C 1059, Type II, non-redispersible, acrylic emulsion or styrene butadiene.

C. Reglets: Fabricate reglets of not less than 0.0217-inch- (0.55-mm-) thick, galvanized steel sheet. Temporarily fill or cover face opening of reglet to prevent intrusion of concrete or debris.

D. Dovetail Anchor Slots: Hot-dip galvanized steel sheet, not less than 0.0336 inch (0.85 mm) thick, with bent tab anchors. Temporarily fill or cover face opening of slots to prevent intrusion of concrete or debris.

2.12 REPAIR MATERIALS

A. Repair Underlayment: Cement-based, polymer-modified, self-leveling product that can be applied in thicknesses from 1/8 inch (3.2 mm) and that can be feathered at edges to match adjacent floor elevations.

1. Cement Binder: ASTM C 150, portland cement or hydraulic or blended hydraulic cement as defined in ASTM C 219.
2. Primer: Product of underlayment manufacturer recommended for substrate, conditions, and application.
3. Aggregate: Well-graded, washed gravel, 1/8 to 1/4 inch (3.2 to 6 mm) or coarse sand as recommended by underlayment manufacturer.
4. Compressive Strength: Not less than 4100 psi (29 MPa) at 28 days when tested according to ASTM C 109/C 109M.

B. Repair Overlayment: Cement-based, polymer-modified, self-leveling product that can be applied in thicknesses from 1/8 inch (3.2 mm) and that can be feathered at edges to match adjacent floor elevations.

1. Cement Binder: ASTM C 150, portland cement or hydraulic or blended hydraulic cement as defined in ASTM C 219.
2. Primer: Product of topping manufacturer recommended for substrate, conditions, and application.
3. Aggregate: Well-graded, washed gravel, 1/8 to 1/4 inch (3.2 to 6 mm) or coarse sand as recommended by topping manufacturer.
4. Compressive Strength: Not less than 5000 psi (34.5 MPa) at 28 days when tested according to ASTM C 109/C 109M.

2.13 CONCRETE MIXTURES, GENERAL

A. Prepare design mixtures for each type and strength of concrete, proportioned on the basis of laboratory trial mixture or field test data, or both, according to ACI 301.

1. Use a qualified independent testing agency for preparing and reporting proposed mixture designs based on laboratory trial mixtures.

B. Cementitious Materials: Limit percentage, by weight, of cementitious materials other than portland cement in concrete as follows:
1. Combined Fly Ash or Pozzolan and Ground Granulated Blast-Furnace Slag: 50 percent portland cement minimum, with fly ash or pozzolan not exceeding 25 percent.
2. Silica Fume: 10 percent.

C. Limit water-soluble, chloride-ion content in hardened concrete to 0.15 percent by weight of cement at exterior conditions and 0.30 percent by weight of cement at interior conditions.

D. Admixtures: Use admixtures according to manufacturer's written instructions.

1. Use water-reducing or plasticizing admixture in concrete, as required, for placement and workability.
2. Use water-reducing and retarding admixture when required by high temperatures, low humidity, or other adverse placement conditions.
3. Use water-reducing admixture in pumped concrete, concrete for heavy-use industrial slabs and parking structure slabs, concrete required to be watertight, and concrete with a water-cementitious materials ratio below 0.50.
4. Use corrosion-inhibiting admixture in concrete mixtures where indicated.

E. Color Pigment: Add color pigment to concrete mixture according to manufacturer's written instructions and to result in hardened concrete color consistent with approved mockup. Coordinate color and location with Architect.

2.14 CONCRETE MIXTURES FOR BUILDING ELEMENTS

A. Footings: Proportion normal-weight concrete mixture as follows:

1. Minimum Compressive Strength: 4000 psi (27.6 MPa) at 28 days.
2. Maximum Water-Cementitious Materials Ratio: 0.50.
3. Slump Limit: 3 inch minimum and 5 inch maximum (at point of concrete placement), plus or minus 1 inch (25 mm).
4. Exposure Class: F2, S0, C1, P0

B. Foundation Walls: Proportion normal-weight concrete mixture as follows:

1. Minimum Compressive Strength: 4000 psi (27.6 MPa) at 28 days.
2. Maximum Water-Cementitious Materials Ratio: 0.50.
3. Slump Limit: 3 inch minimum and 5 inch maximum (at point of concrete placement), plus or minus 1 inch (25 mm).

4. Exposure Class: F2, S0, C1, P0

C. Slabs-on-Grade - Interior: Proportion normal-weight concrete mixture as follows:

1. Minimum Compressive Strength: 4000 psi (27.6 MPa) at 28 days.
2. Minimum Cementitious Materials Content: 520 lb/cu. yd. (309 kg/cu. m).
3. Slump Limit: 3 inch minimum and 5 inch maximum (at point of concrete placement), plus or minus 1 inch (25 mm).
4. Exposure Class: F2, So, C1, P0

D. Slabs-on-Grade – Exterior (Exposed to Exterior Conditions): Proportion normal-weight concrete mixture as follows:

1. Minimum Compressive Strength: 4500 psi (31 MPa) at 28 days.
2. Minimum Cementitious Materials Content: 520 lb/cu. yd. (309 kg/cu. m).
3. Slump Limit: 3 inch minimum and 5 inch maximum (at point of concrete placement), plus or minus 1 inch (25 mm).
4. Air Content: 6 percent, plus or minus 1.5 percent at point of delivery for 1-inch (25-mm) nominal maximum aggregate size.
5. Air Content: Do not allow air content of troweled finished floors to exceed 3 percent.
6. Exposure Class: F2, S0, C2, P0

E. Suspended Slabs: Proportion normal-weight concrete mixture as follows:

1. Minimum Compressive Strength: 3500 psi (24.1 MPa) at 28 days.
2. Minimum Cementitious Materials Content: 470 lb/cu. yd. (309 kg/cu. m).
3. Slump Limit: 3 inch minimum and 5 inch maximum (at point of concrete placement), plus or minus 1 inch (25 mm). For pumpable concrete, slumps may be increased by 3 inches.
4. Exposure Class: F0, S0, C0, P0

2.15 FABRICATING REINFORCEMENT

A. Fabricate steel reinforcement according to CRSI's "Manual of Standard Practice."

2.16 CONCRETE MIXING

A. Ready-Mixed Concrete: Measure, batch, mix, and deliver concrete according to ASTM C 94/C 94M, and furnish batch ticket information.

1. When air temperature is between 85 and 90 deg F (30 and 32 deg C), reduce mixing and delivery time from 1-1/2 hours to 75 minutes; when air temperature is above 90 deg F (32 deg C), reduce mixing and delivery time to 60 minutes.

B. Project-Site Mixing: Measure, batch, and mix concrete materials and concrete according to ASTM C 94/C 94M. Mix concrete materials in appropriate drum-type batch machine mixer.

1. For mixer capacity of 1 cu. yd. (0.76 cu. m) or smaller, continue mixing at least 1-1/2 minutes, but not more than 5 minutes after ingredients are in mixer, before any part of batch is released.
2. For mixer capacity larger than 1 cu. yd. (0.76 cu. m), increase mixing time by 15 seconds for each additional 1 cu. yd. (0.76 cu. m).
3. Provide batch ticket for each batch discharged and used in the Work, indicating Project identification name and number, date, mixture type, mixture time, quantity, and amount of water added. Record approximate location of final deposit in structure.

PART 3 - EXECUTION

3.1 FORMWORK

A. Design, erect, shore, brace, and maintain formwork, according to ACI 301, to support vertical, lateral, static, and dynamic loads, and construction loads that might be applied, until structure can support such loads.

B. Construct formwork so concrete members and structures are of size, shape, alignment, elevation, and position indicated, within tolerance limits of ACI 117.

C. Limit concrete surface irregularities, designated by ACI 347R as abrupt or gradual, as follows:

1. Class A, 1/8 inch (3.2 mm) for smooth-formed finished surfaces.
2. Class C, 1/2 inch (13 mm) for rough-formed finished surfaces.

D. Construct forms tight enough to prevent loss of concrete mortar.

E. Fabricate forms for easy removal without hammering or prying against concrete surfaces. Provide crush or wrecking plates where stripping may damage cast concrete surfaces. Provide top forms for inclined surfaces steeper than 1.5 horizontal to 1 vertical.

1. Install keyways, reglets, recesses, and the like, for easy removal.
2. Do not use rust-stained steel form-facing material.

F. Set edge forms, bulkheads, and intermediate screed strips for slabs to achieve required elevations and slopes in finished concrete surfaces. Provide and secure units to support screed strips; use strike-off templates or compacting-type screeds.

G. Provide temporary openings for cleanouts and inspection ports where interior area of formwork is inaccessible. Close openings with panels tightly fitted to forms and securely braced to prevent loss of concrete mortar. Locate temporary openings in forms at inconspicuous locations.

H. Chamfer exterior corners and edges of permanently exposed concrete.

I. Form openings, chases, offsets, sinkages, keyways, reglets, blocking, screeds, and bulkheads required in the Work. Determine sizes and locations from trades providing such items.

J. Clean forms and adjacent surfaces to receive concrete. Remove chips, wood, sawdust, dirt, and other debris just before placing concrete.

K. Retighten forms and bracing before placing concrete, as required, to prevent mortar leaks and maintain proper alignment.

L. Coat contact surfaces of forms with form-release agent, according to manufacturer's written instructions, before placing reinforcement.

3.2 EMBEDDED ITEMS

A. Place and secure anchorage devices and other embedded items required for adjoining work that is attached to or supported by cast-in-place concrete. Use setting drawings, templates, diagrams, instructions, and directions furnished with items to be embedded.

1. Install anchor rods, accurately located, to elevations required and complying with tolerances in Section 7.5 of AISC's "Code of Standard Practice for Steel Buildings and Bridges."
2. Install reglets to receive waterproofing and to receive through-wall flashings in outer face of concrete frame at exterior walls, where flashing is shown at lintels, shelf angles, and other conditions.
3. Install dovetail anchor slots in concrete structures as indicated.

3.3 REMOVING AND REUSING FORMS

A. General: Formwork for sides of beams, walls, columns, and similar parts of the Work that does not support weight of concrete may be removed after cumulatively curing at not less than 50 deg F (10 deg C) for 24 hours after placing concrete, if concrete is hard enough to not be damaged by form-removal operations and curing and protection operations are maintained.

1. Leave formwork for beam soffits, joists, slabs, and other structural elements that supports weight of concrete in place until concrete has achieved at least 70 percent of its 28-day design compressive strength.
2. Remove forms only if shores have been arranged to permit removal of forms without loosening or disturbing shores.

B. Clean and repair surfaces of forms to be reused in the Work. Split, frayed, delaminated, or otherwise damaged form-facing material will not be acceptable for exposed surfaces. Apply new form-release agent.

C. When forms are reused, clean surfaces, remove fins and laitance, and tighten to close joints. Align and secure joints to avoid offsets. Do not use patched forms for exposed concrete surfaces unless approved by Architect.

3.4 SHORES AND RESHORES

A. Comply with ACI 318 (ACI 318M) and ACI 301 for design, installation, and removal of shoring and reshoring.

1. Do not remove shoring or reshoring until measurement of slab tolerances is complete.

B. In multistory construction, extend shoring or reshoring over a sufficient number of stories to distribute loads in such a manner that no floor or member will be excessively loaded or will induce tensile stress in concrete members without sufficient steel reinforcement.

C. Plan sequence of removal of shores and reshore to avoid damage to concrete. Locate and provide adequate reshoring to support construction without excessive stress or deflection.

3.5 VAPOR RETARDERS

A. Plastic Vapor Retarders: Place, protect, and repair vapor retarders according to ASTM E 1643 and manufacturer's written instructions.

1. Lap joints 6 inches (150 mm) and seal with manufacturer's recommended tape.

B. Bituminous Vapor Retarders: Place, protect, and repair vapor retarders according to manufacturer's written instructions.

C. Granular Course: Cover vapor retarder with granular fill, moisten, and compact with mechanical equipment to elevation tolerances of plus 0 inch (0 mm) or minus 3/4 inch (19 mm).

3.6 STEEL REINFORCEMENT

A. General: Comply with CRSI's "Manual of Standard Practice" for placing reinforcement.

1. Do not cut or puncture vapor retarder. Repair damage and reseal vapor retarder before placing concrete.

B. Clean reinforcement of loose rust and mill scale, earth, ice, and other foreign materials that would reduce bond to concrete.

C. Accurately position, support, and secure reinforcement against displacement. Locate and support reinforcement with bar supports to maintain minimum concrete cover. Do not tack weld crossing reinforcing bars.

1. Weld reinforcing bars according to AWS D1.4, where indicated.

D. Set wire ties with ends directed into concrete, not toward exposed concrete surfaces.

E. Install welded wire reinforcement in longest practicable lengths on bar supports spaced to minimize sagging. Lap edges and ends of adjoining sheets at least one mesh spacing. Offset

laps of adjoining sheet widths to prevent continuous laps in either direction. Lace overlaps with wire.

3.7 JOINTS

A. General: Construct joints true to line with faces perpendicular to surface plane of concrete.

B. Construction Joints: Install so strength and appearance of concrete are not impaired, at locations indicated or as approved by Architect.

1. Place joints perpendicular to main reinforcement. Continue reinforcement across construction joints, unless otherwise indicated. Do not continue reinforcement through sides of strip placements of floors and slabs.
2. Form keyed joints as indicated. Embed keys at least 1-1/2 inches (38 mm) into concrete.
3. Locate joints for beams, slabs, joists, and girders in the middle third of spans. Offset joints in girders a minimum distance of twice the beam width from a beam-girder intersection.
4. Locate horizontal joints in walls and columns at underside of floors, slabs, beams, and girders and at the top of footings or floor slabs.
5. Space vertical joints in walls as indicated. Locate joints beside piers integral with walls, near corners, and in concealed locations where possible.
6. Use a bonding agent at locations where fresh concrete is placed against hardened or partially hardened concrete surfaces.
7. Use epoxy-bonding adhesive at locations where fresh concrete is placed against hardened or partially hardened concrete surfaces.

C. Contraction Joints in Slabs-on-Grade: Form weakened-plane contraction joints, sectioning concrete into areas as indicated. Construct contraction joints for a depth equal to at least one-fourth of concrete thickness as follows:

1. Grooved Joints: Form contraction joints after initial floating by grooving and finishing each edge of joint to a radius of 1/8 inch (3.2 mm). Repeat grooving of contraction joints after applying surface finishes. Eliminate groover tool marks on concrete surfaces.
2. Sawed Joints: Form contraction joints with power saws equipped with shatterproof abrasive or diamond-rimmed blades. Cut 1/8-inch- (3.2-mm-) wide joints into concrete when cutting action will not tear, abrade, or otherwise damage surface and before concrete develops random contraction cracks.

D. Isolation Joints in Slabs-on-Grade: After removing formwork, install joint-filler strips at slab junctions with vertical surfaces, such as column pedestals, foundation walls, grade beams, and other locations, as indicated.

1. Extend joint-filler strips full width and depth of joint, terminating flush with finished concrete surface, unless otherwise indicated.
2. Terminate full-width joint-filler strips not less than 1/2 inch (13 mm) or more than 1 inch (25 mm) below finished concrete surface where joint sealants, specified in Division 7 Section "Joint Sealants," are indicated.

3. Install joint-filler strips in lengths as long as practicable. Where more than one length is required, lace or clip sections together.

E. Doweled Joints: Install dowel bars and support assemblies at joints where indicated. Lubricate or asphalt coat one-half of dowel length to prevent concrete bonding to one side of joint.

3.8 WATERSTOPS

A. Flexible Waterstops: Install in construction joints and at other joints indicated to form a continuous diaphragm. Install in longest lengths practicable. Support and protect exposed waterstops during progress of the Work. Field fabricate joints in waterstops according to manufacturer's written instructions.

B. Self-Expanding Strip Waterstops: Install in construction joints and at other locations indicated, according to manufacturer's written instructions, adhesive bonding, mechanically fastening, and firmly pressing into place. Install in longest lengths practicable.

3.9 CONCRETE PLACEMENT

A. Before placing concrete, verify that installation of formwork, reinforcement, and embedded items is complete and that required inspections have been performed.

B. Do not add water to concrete during delivery, at Project site, or during placement unless approved by Architect.

C. Before test sampling and placing concrete, water may be added at Project site, subject to limitations of ACI 301.

1. Do not add water to concrete after adding high-range water-reducing admixtures to mixture.

D. Deposit concrete continuously in one layer or in horizontal layers of such thickness that no new concrete will be placed on concrete that has hardened enough to cause seams or planes of weakness. If a section cannot be placed continuously, provide construction joints as indicated. Deposit concrete to avoid segregation.

1. Deposit concrete in horizontal layers of depth to not exceed formwork design pressures and in a manner to avoid inclined construction joints.
2. Consolidate placed concrete with mechanical vibrating equipment according to ACI 301.
3. Do not use vibrators to transport concrete inside forms. Insert and withdraw vibrators vertically at uniformly spaced locations to rapidly penetrate placed layer and at least 6 inches (150 mm) into preceding layer. Do not insert vibrators into lower layers of concrete that have begun to lose plasticity. At each insertion, limit duration of vibration to time necessary to consolidate concrete and complete embedment of reinforcement and other embedded items without causing mixture constituents to segregate.

E. Deposit and consolidate concrete for floors and slabs in a continuous operation, within limits of construction joints, until placement of a panel or section is complete.

1. Consolidate concrete during placement operations so concrete is thoroughly worked around reinforcement and other embedded items and into corners.
2. Maintain reinforcement in position on chairs during concrete placement.
3. Screed slab surfaces with a straightedge and strike off to correct elevations.
4. Slope surfaces uniformly to drains where required.
5. Begin initial floating using bull floats or darbies to form a uniform and open-textured surface plane, before excess bleedwater appears on the surface. Do not further disturb slab surfaces before starting finishing operations.

F. Cold-Weather Placement: Comply with ACI 306.1 and as follows. Protect concrete work from physical damage or reduced strength that could be caused by frost, freezing actions, or low temperatures.

1. When average high and low temperature is expected to fall below 40 deg F (4.4 deg C) for three successive days, maintain delivered concrete mixture temperature within the temperature range required by ACI 301.
2. Do not use frozen materials or materials containing ice or snow. Do not place concrete on frozen subgrade or on subgrade containing frozen materials.
3. Do not use calcium chloride, salt, or other materials containing antifreeze agents or chemical accelerators unless otherwise specified and approved in mixture designs.

G. Hot-Weather Placement: Comply with ACI 301 and as follows:

1. Maintain concrete temperature below 90 deg F (32 deg C) at time of placement. Chilled mixing water or chopped ice may be used to control temperature, provided water equivalent of ice is calculated to total amount of mixing water. Using liquid nitrogen to cool concrete is Contractor's option.
2. Fog-spray forms, steel reinforcement, and subgrade just before placing concrete. Keep subgrade uniformly moist without standing water, soft spots, or dry areas.

3.10 FINISHING FORMED SURFACES

A. Rough-Formed Finish: As-cast concrete texture imparted by form-facing material with tie holes and defects repaired and patched. Remove fins and other projections that exceed specified limits on formed-surface irregularities.

1. Apply to concrete surfaces not exposed to public view.

B. Smooth-Formed Finish: As-cast concrete texture imparted by form-facing material, arranged in an orderly and symmetrical manner with a minimum of seams. Repair and patch tie holes and defects. Remove fins and other projections that exceed specified limits on formed-surface irregularities.

1. Apply to concrete surfaces exposed to public view, to be covered with a coating or covering material applied directly to concrete.

C. Related Unformed Surfaces: At tops of walls, horizontal offsets, and similar unformed surfaces adjacent to formed surfaces, strike off smooth and finish with a texture matching adjacent formed surfaces. Continue final surface treatment of formed surfaces uniformly across adjacent unformed surfaces, unless otherwise indicated.

3.11 FINISHING FLOORS AND SLABS

A. General: Comply with ACI 302.1R recommendations for screeding, restraightening, and finishing operations for concrete surfaces. Do not wet concrete surfaces.

B. Scratch Finish: While still plastic, texture concrete surface that has been screeded and bull-floated or darbied. Use stiff brushes, brooms, or rakes to produce a profile amplitude of 1/4 inch (6 mm) in 1 direction.

1. Apply scratch finish to surfaces indicated and to receive concrete floor toppings.

C. Float Finish: Consolidate surface with power-driven floats or by hand floating if area is small or inaccessible to power driven floats. Restraighten, cut down high spots, and fill low spots. Repeat float passes and restraightening until surface is left with a uniform, smooth, granular texture.

1. Apply float finish to surfaces indicated to receive trowel finish and to be covered with fluid-applied or sheet waterproofing, built-up or membrane roofing, or sand-bed terrazzo.

D. Trowel Finish: After applying float finish, apply first troweling and consolidate concrete by hand or power-driven trowel. Continue troweling passes and restraighten until surface is free of trowel marks and uniform in texture and appearance. Grind smooth any surface defects that would telegraph through applied coatings or floor coverings.

1. Apply a trowel finish to surfaces indicated, exposed to view or to be covered with resilient flooring, carpet, ceramic or quarry tile set over a cleavage membrane, paint, or another thin-film-finish coating system.
2. Finish surfaces to the following tolerances, according to ASTM E 1155 (ASTM E 1155M), for a randomly trafficked floor surface and per ACI 117 “Specification For Tolerances For Concrete Construction & Materials”:

   a. Specified overall values of flatness, F(F) 25; and of levelness, F(L) 20 as a minimum. Coordinate and specify minimum F(F) and F(L) values with flooring manufacturer during concrete pre-installation conference. Note: Flooring manufacturer may require very flat surface classification (F(F) 45; F(L) 35) or super flat surface classification (F(F) 60 ; F(L) 40). Coordinate locations and requirements prior to installation.

   b. Provide maximum floor variation of 1/8” in 10’ and 1/16” in 1’ for terrazzo floor tile area or requirement as indicated by product manufacturer, whichever is more stringent.

E. Broom Finish: Apply a broom finish to exterior concrete platforms, steps, and ramps, and elsewhere as indicated.

1. Immediately after float finishing, slightly roughen trafficked surface by brooming with fiber-bristle broom perpendicular to main traffic route. Coordinate required final finish with Architect before application.

3.12 MISCELLANEOUS CONCRETE ITEMS

A. Filling In: Fill in holes and openings left in concrete structures, unless otherwise indicated, after work of other trades is in place. Mix, place, and cure concrete, as specified, to blend with in-place construction. Provide other miscellaneous concrete filling indicated or required to complete the Work.

B. Curbs: Provide monolithic finish to interior curbs by stripping forms while concrete is still green and by steel-troweling surfaces to a hard, dense finish with corners, intersections, and terminations slightly rounded.

C. Equipment Bases and Foundations: Provide machine and equipment bases and foundations as shown on Drawings. Set anchor bolts for machines and equipment at correct elevations, complying with diagrams or templates from manufacturer furnishing machines and equipment.

D. Steel Pan Stairs: Provide concrete fill for steel pan stair treads, landings, and associated items. Cast-in inserts and accessories as shown on Drawings. Screed, tamp, and trowel-finish concrete surfaces.

3.13 CONCRETE PROTECTING AND CURING

A. General: Protect freshly placed concrete from premature drying and excessive cold or hot temperatures. Comply with ACI 306.1 for cold-weather protection and ACI 301 for hot-weather protection during curing.

B. Evaporation Retarder: Apply evaporation retarder to unformed concrete surfaces if hot, dry, or windy conditions cause moisture loss approaching 0.2 lb/sq. ft. x h (1 kg/sq. m x h) before and during finishing operations. Apply according to manufacturer's written instructions after placing, screeding, and bull floating or darbying concrete, but before float finishing.

C. Formed Surfaces: Cure formed concrete surfaces, including underside of beams, supported slabs, and other similar surfaces. If forms remain during curing period, moist cure after loosening forms. If removing forms before end of curing period, continue curing for the remainder of the curing period.

D. Unformed Surfaces: Begin curing immediately after finishing concrete. Cure unformed surfaces, including floors and slabs, concrete floor toppings, and other surfaces.

E. Cure concrete according to ACI 308.1, by one or a combination of the following methods:

1. Moisture Curing: Keep surfaces continuously moist for not less than seven days with the following materials:

    a. Water.
    b. Continuous water-fog spray.
    c. Absorptive cover, water saturated, and kept continuously wet. Cover concrete surfaces and edges with 12-inch (300-mm) lap over adjacent absorptive covers.

2. Moisture-Retaining-Cover Curing: Cover concrete surfaces with moisture-retaining cover for curing concrete, placed in widest practicable width, with sides and ends lapped at least 12 inches (300 mm), and sealed by waterproof tape or adhesive. Cure for not less than seven days. Immediately repair any holes or tears during curing period using cover material and waterproof tape.

    a. Moisture cure or use moisture-retaining covers to cure concrete surfaces to receive floor coverings.
    b. Moisture cure or use moisture-retaining covers to cure concrete surfaces to receive penetrating liquid floor treatments.
    c. Cure concrete surfaces to receive floor coverings with either a moisture-retaining cover or a curing compound that the manufacturer certifies will not interfere with bonding of floor covering used on Project..

3. Curing Compound: Apply uniformly in continuous operation by power spray or roller according to manufacturer's written instructions. Recoat areas subjected to heavy rainfall within three hours after initial application. Maintain continuity of coating and repair damage during curing period.

    a. After curing period has elapsed, remove curing compound without damaging concrete surfaces by method recommended by curing compound manufacturer unless manufacturer certifies curing compound will not interfere with bonding of floor covering used on Project.

4. Curing and Sealing Compound: Apply uniformly to floors and slabs indicated in a continuous operation by power spray or roller according to manufacturer's written instructions. Recoat areas subjected to heavy rainfall within three hours after initial application. Repeat process 24 hours later and apply a second coat. Maintain continuity of coating and repair damage during curing period.

3.14 JOINT FILLING

A. Prepare, clean, and install joint filler according to manufacturer's written instructions.

    1. Defer joint filling until concrete has aged at least one month(s). Do not fill joints until construction traffic has permanently ceased.

B. Remove dirt, debris, saw cuttings, curing compounds, and sealers from joints; leave contact faces of joint clean and dry.

C. Install semirigid joint filler full depth in saw-cut joints and at least 2 inches (50 mm) deep in formed joints. Overfill joint and trim joint filler flush with top of joint after hardening.

3.15 CONCRETE SURFACE REPAIRS

A. Defective Concrete: Repair and patch defective areas when approved by Architect. Remove and replace concrete that cannot be repaired and patched to Architect's approval.

B. Patching Mortar: Mix dry-pack patching mortar, consisting of one part portland cement to two and one-half parts fine aggregate passing a No. 16 (1.18-mm) sieve, using only enough water for handling and placing.

C. Repairing Formed Surfaces: Surface defects include color and texture irregularities, cracks, spalls, air bubbles, honeycombs, rock pockets, fins and other projections on the surface, and stains and other discolorations that cannot be removed by cleaning.

1. Immediately after form removal, cut out honeycombs, rock pockets, and voids more than 1/2 inch (13 mm) in any dimension in solid concrete, but not less than 1 inch (25 mm) in depth. Make edges of cuts perpendicular to concrete surface. Clean, dampen with water, and brush-coat holes and voids with bonding agent. Fill and compact with patching mortar before bonding agent has dried. Fill form-tie voids with patching mortar or cone plugs secured in place with bonding agent.
2. Repair defects on surfaces exposed to view by blending white portland cement and standard portland cement so that, when dry, patching mortar will match surrounding color. Patch a test area at inconspicuous locations to verify mixture and color match before proceeding with patching. Compact mortar in place and strike off slightly higher than surrounding surface.
3. Repair defects on concealed formed surfaces that affect concrete's durability and structural performance as determined by Architect.

D. Repairing Unformed Surfaces: Test unformed surfaces, such as floors and slabs, for finish and verify surface tolerances specified for each surface. Correct low and high areas. Test surfaces sloped to drain for trueness of slope and smoothness; use a sloped template.

1. Repair finished surfaces containing defects. Surface defects include spalls, popouts, honeycombs, rock pockets, crazing and cracks in excess of 0.01 inch (0.25 mm) wide or that penetrate to reinforcement or completely through unreinforced sections regardless of width, and other objectionable conditions.
2. After concrete has cured at least 14 days, correct high areas by grinding.
3. Correct localized low areas during or immediately after completing surface finishing operations by cutting out low areas and replacing with patching mortar. Finish repaired areas to blend into adjacent concrete.
4. Correct other low areas scheduled to receive floor coverings with a repair underlayment. Prepare, mix, and apply repair underlayment and primer according to manufacturer's written instructions to produce a smooth, uniform, plane, and level surface. Feather edges to match adjacent floor elevations.

5. Correct other low areas scheduled to remain exposed with a repair topping. Cut out low areas to ensure a minimum repair topping depth of 1/4 inch (6 mm) to match adjacent floor elevations. Prepare, mix, and apply repair topping and primer according to manufacturer's written instructions to produce a smooth, uniform, plane, and level surface.
6. Repair defective areas, except random cracks and single holes 1 inch (25 mm) or less in diameter, by cutting out and replacing with fresh concrete. Remove defective areas with clean, square cuts and expose steel reinforcement with at least a 3/4-inch (19-mm) clearance all around. Dampen concrete surfaces in contact with patching concrete and apply bonding agent. Mix patching concrete of same materials and mixture as original concrete except without coarse aggregate. Place, compact, and finish to blend with adjacent finished concrete. Cure in same manner as adjacent concrete.
7. Repair random cracks and single holes 1 inch (25 mm) or less in diameter with patching mortar. Groove top of cracks and cut out holes to sound concrete and clean off dust, dirt, and loose particles. Dampen cleaned concrete surfaces and apply bonding agent. Place patching mortar before bonding agent has dried. Compact patching mortar and finish to match adjacent concrete. Keep patched area continuously moist for at least 72 hours.

E. Perform structural repairs of concrete, subject to Architect's approval, using epoxy adhesive and patching mortar.

F. Repair materials and installation not specified above may be used, subject to Architect's approval.

3.16 FIELD QUALITY CONTROL

A. Testing and Inspecting: Owner will engage a qualified testing and inspecting agency to perform field tests and inspections and prepare test reports.

B. Testing and Inspecting: Engage a qualified testing and inspecting agency to perform tests and inspections and to submit reports.

C. Inspections:

1. Steel reinforcement placement.
2. Steel reinforcement welding.
3. Headed bolts and studs.
4. Verification of use of required design mixture.
5. Concrete placement, including conveying and depositing.
6. Curing procedures and maintenance of curing temperature.
7. Verification of concrete strength before removal of shores and forms from beams and slabs.

D. Concrete Tests: Testing of composite samples of fresh concrete obtained according to ASTM C 172 shall be performed according to the following requirements:

1. Testing Frequency: Obtain one composite sample for each day's pour of each concrete mixture exceeding 5 cu. yd. (4 cu. m), but less than 25 cu. yd. (19 cu. m), plus one set for each additional 50 cu. yd. (38 cu. m) or fraction thereof.
2. Testing Frequency: Obtain at least one composite sample for each 100 cu. yd. (76 cu. m) or fraction thereof of each concrete mixture placed each day.

    a. When frequency of testing will provide fewer than five compressive-strength tests for each concrete mixture, testing shall be conducted from at least five randomly selected batches or from each batch if fewer than five are used.

3. Slump: ASTM C 143/C 143M; one test at point of placement for each composite sample, but not less than one test for each day's pour of each concrete mixture. Perform additional tests when concrete consistency appears to change.
4. Air Content: ASTM C 231, pressure method, for normal-weight concrete; one test for each composite sample, but not less than one test for each day's pour of each concrete mixture.
5. Concrete Temperature: ASTM C 1064/C 1064M; one test hourly when air temperature is 40 deg F (4.4 deg C) and below and when 80 deg F (27 deg C) and above, and one test for each composite sample.
6. Unit Weight: ASTM C 567, fresh unit weight of structural lightweight concrete; one test for each composite sample, but not less than one test for each day's pour of each concrete mixture.
7. Compression Test Specimens: ASTM C 31/C 31M.

    a. Cast and laboratory cure two sets of two standard cylinder specimens for each composite sample.
    b. Cast and field cure two sets of two standard cylinder specimens for each composite sample.

8. Compressive-Strength Tests: ASTM C 39/C 39M; test one set of two laboratory-cured specimens at 7 days and one set of two specimens at 28 days.

    a. Test one set of two field-cured specimens at 7 days and one set of two specimens at 28 days.
    b. A compressive-strength test shall be the average compressive strength from a set of two specimens obtained from same composite sample and tested at age indicated.

9. When strength of field-cured cylinders is less than 85 percent of companion laboratory-cured cylinders, Contractor shall evaluate operations and provide corrective procedures for protecting and curing in-place concrete.
10. Strength of each concrete mixture will be satisfactory if every average of any three consecutive compressive-strength tests equals or exceeds specified compressive strength and no compressive-strength test value falls below specified compressive strength by more than 500 psi (3.4 MPa).
11. Test results shall be reported in writing to Architect, concrete manufacturer, and Contractor within 48 hours of testing. Reports of compressive-strength tests shall contain Project identification name and number, date of concrete placement, name of concrete testing and inspecting agency, location of concrete batch in Work, design compressive

strength at 28 days, concrete mixture proportions and materials, compressive breaking strength, and type of break for both 7- and 28-day tests.

12. Nondestructive Testing: Impact hammer, sonoscope, or other nondestructive device may be permitted by Architect but will not be used as sole basis for approval or rejection of concrete.
13. Additional Tests: Testing and inspecting agency shall make additional tests of concrete when test results indicate that slump, air entrainment, compressive strengths, or other requirements have not been met, as directed by Architect. Testing and inspecting agency may conduct tests to determine adequacy of concrete by cored cylinders complying with ASTM C 42/C 42M or by other methods as directed by Architect.
14. Additional testing and inspecting, at Contractor's expense, will be performed to determine compliance of replaced or additional work with specified requirements.
15. Correct deficiencies in the Work that test reports and inspections indicate dos not comply with the Contract Documents.

E. Measure floor and slab flatness and levelness according to ASTM E 1155 (ASTM E 1155M) within 48 hours of finishing. Values to be documented and provided to Architect and Flooring Manufacturer prior to placing flooring.

END OF SECTION 033000

SECTION 03 4900
GLASS-FIBER REINFORCED CONCRETE

PART 1 GENERAL

1.01 SECTION INCLUDES

A. Architectural precast glass-fiber-reinforced concrete (GFRC) columns, to receive field finish.

B. Supports, anchors, and attachments.

1.02 RELATED REQUIREMENTS

A. Section 05 1200 - Structural Steel Framing: Placement of anchors specified in this section.

B. Section 05 4000 - Cold-Formed Metal Framing: Structural stud members.

C. Section 07 9200 - Joint Sealants: Application of backer rods or bond breakers and joint sealers.

D. Section 09 9000 - Paints and Coatings: Field painting of GFRC items.

1.03 REFERENCE STANDARDS

A. ASTM A36/A36M - Standard Specification for Carbon Structural Steel; 2014.

B. ASTM A153/A153M - Standard Specification for Zinc Coating (Hot-Dip) on Iron and Steel Hardware; 2016a.

C. ASTM A563 - Standard Specification for Carbon and Alloy Steel Nuts; 2007a (Reapproved 2014).

D. ASTM A563M - Standard Specification for Carbon and Alloy Steel Nuts [Metric]; 2007.

E. ASTM A653/A653M - Standard Specification for Steel Sheet, Zinc-Coated (Galvanized) or Zinc-Iron Alloy-Coated (Galvannealed) by the Hot-Dip Process; 2015.

F. ASTM C33/C33M - Standard Specification for Concrete Aggregates; 2013.

G. ASTM C150/C150M - Standard Specification for Portland Cement; 2015.

H. ASTM C260/C260M - Standard Specification for Air-Entraining Admixtures for Concrete; 2010a.

I. ASTM C494/C494M - Standard Specification for Chemical Admixtures for Concrete; 2013.

J. ASTM C618 - Standard Specification for Coal Fly Ash and Raw or Calcined Natural Pozzolan for Use in Concrete; 2015.

K. ASTM F436/F436M - Standard Specification for Hardened Steel Washers Inch and Metric Dimensions; 2016.

L. ASTM F3125/F3125M - Standard Specification for High Strength Structural Bolts, Steel and Alloy Steel, Heat Treated, 120 ksi (830 MPa) and 150 ksi (1040 MPa) Minimum Tensile Strength, Inch and Metric Dimensions; 2015a.

M. AWS D1.1/D1.1M - Structural Welding Code - Steel; 2015 (Errata 2016).

N. PCI MNL-117 - Manual for Quality Control for Plants and Production of Architectural Precast Concrete Products; 2007.

O. PCI MNL-128 - Recommended Practice for Glass Fiber Reinforced Concrete Panels; 2001, Fourth Edition.

1.04 PERFORMANCE REQUIREMENTS

A. Structural Performance: GFRC cornice and columns, including anchors, and connections, shall withstand the following design loads, as well as the effects of thermal- and moisture-induced

volume changes, according to load factors and combinations established in PCI MNL 128, "Recommended Practice for Glass Fiber Reinforced Concrete Panel."

1. Design Loads:
   a. Exterior GFRC: Lateral Loads not less than 50 psf inward and outward.
2. Deflection: Design panel frames to withstand design loads without lateral deflections greater than 1/240 of wall span.
3. Thermal Movements: Provide for thermal movements resulting from annual ambient temperature changes of 120 degF.
4. Design cornice frames and connections to accommodate deflections and other building movements.

1.05 SUBMITTALS

A. Shop Drawings: Indicate locations, fabrication and installation details for GFRC components including the following:
   1. Structural analysis data signed and sealed by the qualified professional engineer responsible for their preparation.
   2. Reinforcement.
   3. Metal framing details.
   4. Connection details.
   5. Dimensions, and relationship to adjacent materials.
   6. Erection details, including the sequence for typical and special conditions, joint treatment.
   7. Repair procedures.

B. Samples: Submit two samples 8 inch by 10 inch in size illustrating surface color, finish and texture.

C. Manufacturer's Installation Instructions: Indicate surface cleaning instructions.

D. Designer Qualifications.

E. Fabricator Qualifications.

1.06 QUALITY ASSURANCE

A. Designer Qualifications: Design units under direct supervision of a Professional Structural Engineer experienced in design of this Work and licensed in the State of Delaware.

B. Fabricator Qualifications: Certified by the Precast/Prestressed Concrete Institute Plant Certification Program; product Group G, Glass Fiber Reinforced Concrete or that participates in APA's Plant Certification Program and is certified for GFRC production.

C. Welding Qualifications: Qualify procedures and personnel according to AWS D1.1/Dl.lM, "Structural Welding Code--Steel," and AWS D1.3, "Structural Welding Code--Sheet Steel."

1.07 MOCK-UP

A. Construct one column, four feet high by the design diameter, with surface finish applied, including supporting backup structure, attachments, and vapor seals applied.

B. Locate where directed.

C. Mock-up may not remain as part of the Work.

1.08 PROJECT CONDITIONS

A. Coordinate the Work with installation of backup supporting structure, application of joint sealers.

1.09 DELIVERY, STORAGE, AND HANDLING

A. Handle units to position, consistent with their shape and design. Lift and support only from support points.

B. Lifting Device: Capable of maintaining unit shape during manufacture, storage, transportation, erection, and in position for fastening.

C. Blocking and Lateral Support During Transport and Storage: Clean, non-staining, without causing harm to exposed surfaces. Provide temporary lateral support to prevent bowing and warping. Place spacers in same location during transport and site storage.

D. Protect edges of units to prevent staining, chipping, or spalling of concrete.

PART 2 PRODUCTS

2.01 MANUFACTURERS

A. Glass-Fiber-Reinforced Concrete: Subject to compliance with the requirements of this Section, with special attention to the metal framing requirement, provide products from one of the following manufacturers:
   1. ARC, Ltd.
   2. Casting Design, Inc. Fort Worth, Texas.
   3. Plaster Concepts
   4. Formglas, Inc.
   5. Stromberg Architectural Products, Inc: www.strombergarchitectural.com.
   6. Substitutions: See Section 01 6000 - Product Requirements.

2.02 GLASS-FIBER-REINFORCED CONCRETE UNITS

A. Glass-Fiber-Reinforced Concrete Units: Factory-fabricated, complying with PCI MNL-128, using rigid molds, constructed to maintain unit panel uniform in shape, size and finish.
   1. Design and fabricate to comply with applicable code(s).
   2. Design to withstand dead loads, positive and negative wind loads, and erection forces.
   3. Control deflection of units to maintain fit with adjacent construction and openings within their tolerances.
   4. Design connections to accommodate building movement without damage to components, wracking of joint connections, breakage of seals, or moisture penetration.
   5. Allow for adjustment of connections to accommodate misalignment of structure without permanent distortion.
   6. Concrete Mix: Of strength to accommodate panel configuration, panel size and weight, and manufacturing criteria, air entrained.
   7. Welding: Comply with AWS D1.1/D1.1M.
   8. Appearance: Ensure exposed-to-view finish surfaces of units are uniform in color and appearance.

2.03 GFRC MATERIALS

A. Cement: ASTM C150/C150M Portland Type I - Normal; white color.

B. Concrete Aggregates: ASTM C33/C33M.

C. Sand for GFRC Backing: Washed and dried silica, complying with composition requirementsof ASTM C 144; passing No. 20 sieve with a maximum of 2 percent passing No. 100 sieve.

D. Water: Potable; free from deleterious material that may affect color stability, setting, or strength of GFRC and complying with the chemical limits of PCI MNL 130.

E. Reinforcement: Alkali resistant glass fiber rovings specifically formulated for use in concrete, with lengths varying from 1-1/2 to 2 inches with a minimum zirconia content of 16 percent complying with ASTM C 1666/C 1666M.

F. Admixtures: Conforming to ASTM C260/C260M, ASTM C494/C494M, and ASTM C618.
   1. Metakaolin: ASTM C 618, Class N.
   2. Air-Entrainment Admixture: ASTM C 260, containing not more than 0.1 percent chloride ions.
   3. Chemical Admixtures: ASTM C 494/C 494M containing chloride ions are not permitted.

G. Polymer Curing Admixture: Acrylic thermoplastic copolymer dispersion complying with PCI MNL 130.

2.04 MOLD FABRICATION

A. Construct molds that will result in finished GFRC complying with profiles, dimensions, and tolerances indicated, without damaging GFRC during stripping. Construct molds to prevent water leakage and loss of cement paste.
   1. Coat contact surface with form-release agent.

B. Place form liners accurately to provide finished surface texture indicated. Provide solid backing and supports to maintain stability of liners during GFRC application.
   1. Coat contact surface with form-release agent.

C. Locate, place and secure flashing reglets accurately.

2.05 FRAMING MATERIALS

A. Metal Framing Members: Formed from hot-dipped galvanized steel sheet, ASTM A653/A653M, SS Grade 50 (340) Class 1, with G90/Z275 coating.

2.06 SUPPORT DEVICES

A. Connecting and Support Devices: ASTM A36/A36M steel; hot-dip galvanized in accordance with ASTM A153/A153M.

B. Bolts, Nuts, and Washers: ASTM F3125/F3125M heavy hex structural bolts, Type 1, with matching ASTM A563 (ASTM A563M) nuts, and washers as follows:
   1. Standard Washers: ASTM F436/F436M washers, in finish matching bolts.

C. Primer: Zinc rich oil alkyd.

2.07 ACCESSORIES

A. Reglets: Plastic shaped and flanged to remain in place once cast; foam plastic filled to eliminate concrete intrusion.

2.08 FABRICATION

A. Spray-up concrete mix in multiple passes; maintain consistent quality during manufacture.

B. Place metal framing members in position in mold.

C. Embed anchors, inserts, plates, angles, and other cast-in items as indicated on shop drawings.

D. Fabricate connecting devices, items fit to framing members, fasteners and accessories necessary for proper installation.

E. Locate hoisting devices to permit device removal after erection.

F. Cure units to minimize appearance blemishes such as non-uniformity, staining or surface cracking.

G. Identify each unit with corresponding code on erection drawings, in location not visible in finish work.

H. Exposed Non-Galvanized Steel Components: Clean surfaces of rust, scale, grease, and foreign matter; prime paint in two coats, except surfaces in direct contact with concrete or requiring field welding.

2.09 FABRICATION TOLERANCES

A. Manufacturing Tolerances: Manufacturer GFRC panels so each finished unit complies with PCI MNL 130 for dimension, position and tolerances.

2.10 FINISHES

A. Finish exposed-face surface of GFRC shall be free of joint marks, grain, or other obvious defects.

1. Surface Finish: match approved architectural precast concrete and approved sample panels.

PART 3 EXECUTION

3.01 EXAMINATION

A. Verify that building structure, anchors, devices, and openings are ready to receive work of this section.

3.02 PREPARATION

A. Provide for erection procedures and induced loads during erection. Maintain temporary bracing in place until final support is provided.

3.03 ERECTION

A. Coordinate installation with that of structural supports, backup, and opening framing, if any.

B. Erect units without damage to shape or finish. Replace or repair damaged panels.

C. Erect units level and plumb within allowable tolerances.

D. Align and maintain uniform horizontal and vertical joints as erection progresses.

E. When units require adjustment beyond design or tolerance criteria, discontinue affected work and advise Architect.

F. Site cutting of panels not permitted.

G. Weld units in place. Perform welding in accordance with AWS D1.1/D1.1M. Provide non-combustible shields during welding operations.

H. Touch-up field welds and scratched or damaged primed painted surfaces.

3.04 TOLERANCES

A. Maximum Variation from Plane of Location: 1/4 inch in 10 feet and 3/8 inch in 100 feet, non-cumulative.

B. Maximum Offset from True Alignment Between Two Connecting Units: 1/4 inch.

C. Maximum Out of Square: 1/8 inch in 10 feet, non-cumulative.

D. Variation From Dimensions Indicated on Shop Drawings: Plus or minus 1/8 inch.

E. Maximum Misalignment of Anchors, Inserts, Openings: 1/8 inch.

F. Bowing of Units: Length of Unit/360.

G. Exposed Joint Dimension: 1/2 inch plus or minus 1/4 inch.

H. Location of Reglets: 1/4 inch from true position.

3.05 FIELD QUALITY CONTROL

A. Perform water absorption test in accordance with PCI MNL-117.

3.06 PROTECTION

A. Protect installed units from damage.

END OF SECTION

SECTION 04 2000
UNIT MASONRY

PART 1 GENERAL

1.01 SECTION INCLUDES

A. Concrete Block.

B. Split-face concrete block.

C. Ground-face concrete block.

D. Clay Facing Brick.

E. Mortar and Grout.

F. Reinforcement and Anchorage.

G. Lintels.

H. Accessories.

1.02 RELATED REQUIREMENTS

A. Division 1 - Administrative Requirements: Preconstruction meeting.

B. Division 1 - Quality Requirements: The Owner will engage an Independent Testing and Inspection Agency to verify the adequacy of the Contractor's quality control.
   1. Before concealing the work behind the brick veneer, obtain the required inspection from a representative of the Owner's independent testing and inspection agency.

C. Division 1 - Quality Requirements: Mock-up:
   1. Construct mock-ups where indicated on the drawings, incorporating all components specified for the location.
   2. Demolish mock-up when directed by Architect, and remove debris from the site.

D. Section 04 4301 - Stone Masonry Veneer: Stone Veneer at base of Calcium Silicate Masonry.

E. Section 04 7200 - Cast Stone Fabrications

F. Section 04 7313 - Calcium Silicate Manufactured Stone Masonry

G. Section 05 5000 - Metal Fabrications: Loose steel lintels.

H. Section 07 1113 - Bituminous Dampproofing: Dampproofing masonry surfaces.

I. Section 07 1300 - Sheet Waterproofing: Waterproofing masonry surfaces.

J. Section 07 2100 - Thermal Insulation: Insulation for cavity spaces.

K. Section 07 6200 - Sheet Metal Flashing and Trim: Through-wall masonry flashings.

L. Section 07 8400 - Firestopping: Firestopping at penetrations of fire-rated masonry and at top of fire-rated walls.

M. Section 07 9200 - Joint Sealants: Sealing control and expansion joints.

1.03 PRICE AND PAYMENT PROCEDURES

A. See Section 01 2300 - Alternates, for alternates affecting the work of this section.

1.04 REFERENCE STANDARDS

A. ACI 530/530.1/ERTA - Building Code Requirements and Specification for Masonry Structures and Related Commentaries; 2011.

B. ASTM A153/A153M - Standard Specification for Zinc Coating (Hot-Dip) on Iron and Steel Hardware; 2016a.

C. ASTM A615/A615M - Standard Specification for Deformed and Plain Carbon Steel Bars for Concrete Reinforcement; 2015.

D. ASTM A1064/A1064M - Standard Specification for Carbon-Steel Wire and Welded Wire Reinforcement, Plain and Deformed, for Concrete; 2015.

E. ASTM C90 - Standard Specification for Loadbearing Concrete Masonry Units; 2014.

F. ASTM C140/C140M - Standard Test Methods of Sampling and Testing Concrete Masonry Units and Related Units; 2014.

G. ASTM C144 - Standard Specification for Aggregate for Masonry Mortar; 2011.

H. ASTM C150/C150M - Standard Specification for Portland Cement; 2015.

I. ASTM C207 - Standard Specification for Hydrated Lime for Masonry Purposes; 2006 (Reapproved 2011).

J. ASTM C216 - Standard Specification for Facing Brick (Solid Masonry Units Made From Clay or Shale); 2014.

K. ASTM C270 - Standard Specification for Mortar for Unit Masonry; 2014a.

L. ASTM C404 - Standard Specification for Aggregates for Masonry Grout; 2011.

M. ASTM C476 - Standard Specification for Grout for Masonry; 2010.

N. ASTM C780 - Standard Test Method for Preconstruction and Construction Evaluation of Mortars for Plain and Reinforced Unit Masonry; 2012.

O. ASTM C979/C979M - Standard Specification for Pigments for Integrally Colored Concrete; 2010.

P. ASTM C1072 - Standard Test Method for Measurement of Masonry Flexural Bond Strength; 2013.

Q. ASTM C1148 - Standard Test Method for Measuring the Drying Shrinkage of Masonry Mortar; 1992a (Reapproved 2008).

R. ASTM C1314 - Standard Test Method for Compressive Strength of Masonry Prisms; 2014.

S. ASTM E514/E514M - Standard Test Method for Water Penetration and Leakage Through Masonry; 2014.

T. BIA Technical Notes No. 7 - Water Penetration Resistance – Design and Detailing; 2005.

U. UL (FRD) - Fire Resistance Directory; current edition.

1.05 ADMINISTRATIVE REQUIREMENTS

A. Preinstallation Meeting: Convene a preinstallation meeting two weeks before starting work of this section; require attendance by all relevant installers.

B. Refer to Section 01 3000 - Administrative Requirements for additional information.

1.06 SUBMITTALS

A. Product Data: Provide data for masonry units, fabricated wire reinforcement, mortar, masonry accessories, and cleaning products including application .

B. Samples: Submit four samples of decorative block and facing brick units to illustrate color, texture, and extremes of color range.

C. Manufacturer's Certificate: Certify that masonry units meet or exceed specified requirements, including referenced material standards and fire ratings.

D. Shop Drawings: Provide shop drawings of vertical wall reinforcement and bond beam reinforcement. Submit, with copies to the Owner's Independent Testing and Inspection Agency, shop drawings for reinforcing detailing fabrication, bending, and placement of unit masonry reinforcing bars. Show details of construction, including dimensioned drawings, plans, elevations, sections, and details of components to be incorporated into Work including, but not limited to, the following:
   1. Flashing System: Large-scale details for each element of flashing system showing layout, profiles, methods of joining, and anchorage details; including lintel units, shelf units, corner units, end dam units, drip edges, conditions showing interface and relationship to adjacent materials, and other special applications.
   2. Fabricated Flashing: Detail corner units, end-dam units, drip edges, and other special applications.
   3. Anchors, Ties, and Accessories: Show sizes, coursing, and locations.
   4. Reinforcing: For masonry reinforcing bars; comply with ACI 315, "Details and Detailing of Concrete Reinforcement"showing bar schedules, stirrup spacing, diagrams of bent bars, and arrangement of masonry reinforcement. Show elevations of reinforced walls.

1.07 INFORMATIONAL SUBMITTALS

A. Material Test Reports: For each type of masonry unit, cementitious materials, and accessories required. Include data on material propertiesmaterial test reports substantiating compliance with requirements. For brick, include test report for efflorescence according to ASTM C 67.
   1. Provide test reports based on testing within previous two years.

B. Material Certificates: Submit material certificates for the following, signed by manufacturer and Contractor. Include statements of material properties indicating compliance with requirements including compliance with standards and type designations within standards.
   1. Each type of masonry unit.
   2. Cementitious materials. Include brand, type, and name of manufacturer. Provide certifications from manufacturer that no admixtures have been added to cementitious materials.
   3. Grout mixes. Include description of type and proportions of ingredients.
   4. Each material and grade indicated for reinforcing bars.
   5. Each type and size of joint reinforcement.
   6. Each type and size of anchors, ties, and metal accessory.

C. Mix Designs: Submit material test reports for the Owner's Independent Testing and Inspection Agency, indicating and interpreting test results relative to compliance of the following proposed masonry materials with requirements.
   1. Include test reports for mortar mixes required to comply with property specification. Test according to ASTM C 109/C 109M for compressive strength, ASTM C 1506 for water retention, and ASTM C 91 for air content. Include description of type and proportions of mortar ingredients.
   2. Include test reports, according to ASTM C 1019 for grout mixes required to comply with compressive strength requirement. Include description of type and proportions of grout ingredients.

D. Manufacturer's Certificate: Certify that water repellent admixture manufacturer has certified masonry unit manufacturer as an approved user of water repellent admixture in the manufacture of concrete block.

E. Maintenance Materials: Furnish the following for Owner's use in maintenance of project.
   1. See Section 01 6000 - Product Requirements, for additional provisions.

2. Extra Pre-Faced Units: 50 of each type, size, and color combination.

1.08 QUALITY ASSURANCE

A. Installer Qualifications: The unit masonry work to be by a single firm specializing in exterior wall masonry work, for a period of not less than 5 years, so that there will be undivided responsibility in this single firm for such work.
   1. The Installer must be experienced with work comparable to the work shown and specified and who has completed projects with a successful in-service performance for a period of not less than 5 years.
   2. The Installer shall engage experienced and qualified subcontractors to perform any part of the masonry work which he is not equipped or qualified to perform properly with his own forces.

B. Standards: Comply with the applicable provisions and recommendations of the following standards below, where standards conflict, the more stringent shall apply, and where a conflict between any stated standard and a project specific requirement of the specifications arise, the more stringent provision shall prevail.
   1. National Concrete Masonry Association (NCMA):"TEK" Information Series.
   2. American Concrete Institute (ACI):
      a. ACI 530/ASCE 5/TMS 402: "Building Code Requirements for Masonry Structures."
      b. ACI 530.1/ASCE 6/TMS 602: "Specifications for Masonry Structures."
   3. Brick Industry Association (BIA) "Technical Notes on Brick Construction."
   4. Underwriters Laboratories, Inc. (UL) "Fire Resistance Ratings."
   5. American Society for Testing and Materials (ASTM) E 2266 “Standard Guide for Design and Construction of Low-Rise FrameBuilding Wall Systems to Resist Water Intrusion.”

C. Source Limitations for Masonry Units: Obtain exposed masonry units of a uniform texture and color, through one source from a single manufacturer for each product required.

D. Source Limitations for Mortar Materials: Obtain mortar ingredients of a uniform quality, including color for exposed masonry, from a single manufacturer for each cementitious component and from one source or producer for each aggregate.

E. Owner’s Independent Testing and Inspection Agency: The Owner will engage a qualified independent testing and inspection agency to perform preconstruction testing indicated below for field quality control. Payment for these services will be made by Owner. Independent testing agency to coordinate submittal of "Special Inspections" testing documentation for State of Delaware (State) review and approval.
   1. The Contractor is responsible for the expense of testing or inspection resulting as a consequence of the following:
      a. Work not evidencing compliance with this specification.
      b. Testing to verify the adequacy of work done without prior notice, improper supervision, or contrary to standard construction practice.
   2. Contractor's Responsibilities:
      a. Furnish labor required to facilitate testing.
      b. Provide materials, samples and access to materials as required for testing.
      c. Provide a complete set of shop and erection drawings, including revisions to previous Architect reviewed submittals.
   3. Owner’s Independent Testing and Inspection Agency's Duties:
      a. The Owner’s Independent Testing and Inspection Agency shall conduct the following tests and inspections, interpret them, evaluate the results for compliance

with the specifications, and report the findings to the Architect, Owner, Contractor, and Local Building Authority, as their interests may appear.

1) Inspection and testing shall be in accordance with ACI requirements for masonry (ACI 530 and ACI 503.1) for the following inspections:
   (a) Observation, sampling and placing of masonry units used in all reinforced masonry construction.
   (b) Inspection reports during reinforced masonry erection.
   (c) Observations of reinforcement condition, size and placement for compliance with ACI 530.
   (d) Ambient temperature during reinforced masonry erection.
   (e) Inspection of reinforced masonry materials to verify compliance with ACI 530.1.
   (f) Prism testing of masonry.
   (g) Observation of proportioning, mixing, consistency of mortar and grout for compliance with ACI 530.1.
   (h) Observation of application of mortar, grout and masonry units for compliance with ACI 530.1.
   (i) Observation of installation of anchors for compliance with ACI 530.

b. Tests shall be conducted at the start of the job, using materials and mixes sampled at point of deposit.

c. Testing of Mortar: The Owner's Independent Testing Laboratory shall verify mix consistency by daily testing in accordance with ASTM C780. Test shall establish specific and overall performance characteristics of the mortar system. Test reports shall be submitted to the Owner / Architect for review under the provisions of the Division 01 section under "General Requirements".

d. Test of grout for reinforced masonry for compliance with ASTM C 476 requirements for the types specified and strength shown, conduct and report the following:
   1) Compressive strength (ASTM C 1019); lab cure and break at a time increment of one at 7 days, and two at 28 days; a minimum of 1 field test shall be made for each 5000 square feet of reinforced CMU wall. Make no less than 3 tests.

e. Preliminary Test of Concrete Masonry Design Strength: With sufficient time, and not less than 28 days prior to the start of reinforced masonry construction, test for the compressive concrete masonry design strength (f'm) as specified. The value of f'm shall be determined by tests of masonry assemblies (prisms) in accordance with ACI 530.1. Not less than five prisms shall be taken as 8 inches for reinforced CMU.

f. Field Tests of Concrete Masonry Design Strength: During construction, the value of the compressive concrete masonry design strength (f'm) shall be verified by field tests in accordance with the ACI and ASTM standards. A minimum of one field test shall be made for every 5000 square feet of reinforced CMU wall. Not less than three prisms shall be made for each field test. The thickness of the prisms shall be taken as 8 inches for the reinforced CMU.

F. Fire-Resistance Ratings: Where indicated, provide materials and construction identical to those of assemblies with fire-resistance ratings determined per ASTM E 119 by a testing and inspecting agency, by equivalent concrete masonry thickness, or by other means, as acceptable to authorities having jurisdiction.

1.09 MOCK-UP

A. Construct a masonry wall as a mock-up panel sized 12 feet long by 10 feet high, with a corner and a 4 foot return. Include components listed below in mock-up.

B. Construct a masonry wall as a mock-up panel; include:
   1. Mortar and accessories.
   2. Structural backup, including sheathing.
   3. Flashings.
   4. Spray foam wall insulation.
   5. Brick watertable.
   6. Control joint
   7. (1) sample window unit with jack arch and cast stone window sill.
   8. Corner quoins detail

C. Refer to Section 01 4000 - Quality Requirements for additional information.

D. Locate where directed.

E. Mock-up may not remain as part of the Work.

1.10 DELIVERY, STORAGE, AND HANDLING

A. Deliver, handle, and store masonry units by means that will prevent mechanical damage and contamination by other materials.

B. Store masonry units on elevated platforms in a dry location. If units are not stored in an enclosed location, cover tops and sides of stacks with waterproof sheeting, securely tied. If units become wet, do not install until they are dry.
   1. Deliver masonry veneer units to the jobsite on covered banded pallets with cardboard between layers. Store pallets in single stacks on level ground and cover with waterproof covering to protect the units form inclement weather. Handle masonry veneer units carefully to avoid breakage and damage to the finished surfaces.

C. Store cementitious materials on elevated platforms, under cover, and in a dry location. Do not use cementitious materials that have become damp.

D. Store aggregates where grading and other required characteristics can be maintained and contamination avoided. During cold weather stockpile aggregates so that it may be possible to heat them for use in mixing mortar in compliance with ACI recommendations for cold weather masonry practices.

E. Deliver pre-blended dry mortar mix, if used for the project, in moisture-resistant containers designed for use with dispensing silos. Store pre-blended dry mortar mix in delivery containers on elevated platforms, under cover, and in a dry location or in covered weatherproof dispensing silos.

F. Store masonry accessories, including metal items, to prevent corrosion and accumulation of dirt and oil. Do not use metal reinforcing or ties having loose rust or other coatings, including ice, that will reduce rust or destroy bond.

1.11 PROJECT CONDITIONS

A. Protection of Masonry: During construction, cover tops of walls, projections, and sills with waterproof sheeting at end of each day's work. Cover partially completed masonry when construction is not in progress. Prevent excess moisture from entering work in progress.
   1. Extend cover a minimum of 24 inches (600 mm) down both sides and hold cover securely in place.
   2. Protect door and window frames and exposed metal flashings from damage.

B. Stain Prevention: Prevent mortar and soil from staining the face of masonry to be left exposed. Immediately remove mortar and soil that come in contact with such masonry.

1. Protect base of walls from rain-splashed mud and from mortar splatter by spreading coverings on ground and over wall surface.
2. Protect sills, ledges, and projections from mortar droppings.
3. Protect surfaces of window and door frames, as well as similar products with painted and integral finishes, from mortar droppings.
4. Turn scaffold boards near the wall on edge at the end of each day to prevent rain from splashing mortar and dirt onto completed masonry.

C. Cold-Weather Requirements: Do not use metal reinforcing or ties having loose rust or other coatings that will reduce or destroy bond. Do not use frozen materials or materials mixed or coated with ice or frost. Do not build on frozen substrates. Remove and replace unit masonry damaged by frost or by freezing conditions. Comply with cold-weather construction requirements contained in ACI 530.1/ASCE 6 and ACI 530/ASCE 5 and the following requirements:
1. If air temperature falls below 40 deg F, mixing water shall be heated.
2. If the air temperature falls between 20 deg F and 32 deg F inclusively, sand and water shall be heated.
3. If the air temperature falls below 20 deg F, in addition to the requirements of the preceding sub-paragraph, masonry units shall be heated, and heated enclosures shall be used with a minimum temperature of 40 deg F.
4. Masonry shall be protected from freezing for 24 hours after laying.

D. Hot-Weather Requirements: When ambient temperature exceeds 100 deg F (38 deg C), or 90 deg F (32 deg C) with a wind velocity greater than 8 mph (13 km/h), do not spread mortar beds more than 48 inches (1200 mm) ahead of masonry. Set masonry units within one minute of spreading mortar. Comply with hot-weather construction requirements contained in ACI 530.1/ASCE 6/TMS 602.

1.12 DEFINITIONS

A. Exterior: Areas exposed to the elements and areas located in unconditioned spaces

B. Interior: Areas located in conditioned spaces

PART 2 PRODUCTS

2.01 CONCRETE MASONRY UNITS

A. Concrete Block: Comply with referenced standards and as follows:
1. Size: Standard units with nominal face dimensions of 16 by 8 inches and nominal depths as indicated on the drawings for specific locations.
2. Special Shapes: Provide non-standard blocks configured for corners, lintels, control joint edges, jambs, sash, acoustical units, and other detailed conditions.
3. Load-Bearing Units: ASTM C90, lightweight.
   a. Hollow block, as indicated.

B. Decorative Concrete Masonry Units
1. Ground Face and Split Face Block: ASTM C 90:
   a. Size:
      1) Size: Standard units with nominal face dimensions of 16 x 8 inches and nominal depths as indicated on the drawings for specific locations.
   b. Pattern and Texture:
      1) Pattern: ground face and split face finish.
   c. Color: To be selected from full range of manufacturer's standard colors.
      1) Ground Face Type 1: Parchment

2) Ground Face Type 2: Terracotta
3) Ground Face Type 3: Artic White
4) Split Face Type 1: Cream
5) Split Face Type 2: Adobe
6) Split Face Type 3: Terracotta

2. Shapes: Provide special shapes indicated, with exposed surfaces matching exposed faces of adjacent units unless otherwise indicated.
3. Manufacturers:
   a. Basis of Design Ground Face Product: Oldcastle Building Products, Trenwyth Trendstone.
      1) Subject to compliance with requirements, products by the following manufacturers are also acceptable:
         (a) New Holland Concrete
         (b) Fizzano Brothers; Groundface
   b. Basis of Design Split Face Product: Oldcastle Building Products, Split Face.
      1) Subject to compliance with requirements, products by the following manufacturers are also acceptable:
         (a) New Holland Concrete
         (b) Fizzano Brothers; Split Face
   c. Substitutions: See Section 01 6000 - Product Requirements.

C. Units with Integral Water Repellent: Provide exterior concrete block units as specified in this section with polymeric liquid admixture added to concrete masonry units at the time of manufacture.
1. Performance of Units with Integral Water Repellent:
   a. Water Permeance: When tested per ASTM E514/E514M and for a minimum of 72 hours.
      1) No water visible on back of wall above flashing at the end of 24 hours.
      2) No flow of water from flashing equal to or greater than 0.032 gallons per hour at the end of 24 hours.
      3) No more than 25 percent of wall area above flashing visibly damp at end of test.
   b. Flexural Bond Strength: ASTM C1072; minimum 10 percent increase.
   c. Compressive Strength: ASTM C1314; maximum 5 percent decrease.
   d. Drying Shrinkage: ASTM C1148; maximum 5 percent increase in shrinkage.
2. Use only in combination with mortar that also has integral water repellent admixture.
3. Use water repellent admixtures for masonry units and mortar by a single manufacturer.

2.02 BRICK UNITS

A. Facing Brick: ASTM C216, Type FBS Smooth, Grade SW.
1. Basis of Design Manufacturer: Glen Gery Corporation: www.glengery.com.
   a. Color and texture: "Ravenna", sand finish .
2. Actual size: 15-5/8" long x 3-5/8" high, x 3-5/8" deep.
3. Special shapes: Molded units as required by conditions indicated, unless standard units can be sawn to produce equivalent effect:
   a. Corner brick units (custom angle).
   b. Lipped brick at horizontal relieving angles.
   c. Jack arch units .
   d. Circular arch units.
   e. Soldier course units with solid corners.

f. Water table units, including inside and outside corner units.
4. Other approved manufacturers, subject to compliance with requirements:
a. Watsontown Brick Company, Atlantic Series, Bristol Sanded KT.
5. Substitutions: See Section 001600 - Product Requirements.

2.03 MORTAR AND GROUT MATERIALS

A. Masonry Cement: not permitted.

B. Portland Cement: ASTM C150/C150M, Type Ior Type II, without air entrainment.

C. Hydrated Lime: ASTM C207, Type S.

D. Mortar Aggregate: ASTM C144: sand.

E. Grout Aggregate: ASTM C404.

F. Pigments for Colored Mortar: Pure, concentrated mineral pigments specifically intended for mixing into mortar and complying with ASTM C979/C979M.
1. Color(s): To match Architect's sample(s) when incorporated into specified mix design(s).

G. Water: Clean and potable.

H. Accelerating Admixture: Not permitted.

I. Integral Water Repellent Admixture for Mortar: Polymeric liquid admixture added to mortar at the time of manufacture.
1. Use only in combination with concrete masonry units manufactured with integral water repellent admixture.
2. Use only water repellent admixture for mortar from the same manufacturer as water repellent admixture in masonry units.
3. Meet or exceed performance specified for water repellent admixture used in masonry units.
a. Grace Construction Products, a unit of W. R. Grace & Co. - Conn.; Dry-Block Mortar Admixture.
b. Master Builders, Inc.; Rheopel
c. Amerimix, an Oldcastle brand; AMX 410: www.amerimix.com.

2.04 REINFORCEMENT AND ANCHORAGE

A. Manufacturers:
1. Blok-Lok Limited: www.blok-lok.com.
2. Hohmann & Barnard, Inc (including Dur-O-Wal brand): www.h-b.com.
3. WIRE-BOND: www.wirebond.com.

B. Reinforcing Steel: ASTM A615/A615M, Grade 60 (60,000 psi), deformed billet bars; uncoated.

C. Joint Reinforcement: Use ladder type joint reinforcement where vertical reinforcement is involved and truss type elsewhere, unless otherwise indicated.

D. Single Wythe Joint Reinforcement: Truss or ladder type; ASTM A1064/A1064M steel wire, hot dip galvanized after fabrication to ASTM A153/A153M, Class B; 0.1483 inch side rods with 0.1483 inch cross rods; width as required to provide not more than 1 inch and not less than 1/2 inch of mortar coverage on each exposure. . Provide in lengths of not less than 10 feet (3 m),with prefabricated corner and tee units.

E. Adjustable Multiple Wythe Joint Reinforcement: Truss type with adjustable ties spaced at 16 in on center ASTM A1064/A1064M steel wire, hot dip galvanized after fabrication to ASTM A153/153M, Class B; 0.1483 inch side rods with 0.1483 inch cross rods and adjustable

components of 0.1875 inch wire; width of components as required to provide not more than 1 inch and not less than 1/2 inch of mortar coverage from each masonry face. Provide in lengths of not less than 10 feet (3 m),with prefabricated corner and tee units.

1. Vertical adjustment: Not less than 3-1/2 inches.

F. Flexible Anchors: 2-piece anchors that permit differential movement between masonry and building frame, sized to provide not more than 1 inch and not less than 1/2 inch of mortar coverage from masonry face.
   1. Steel frame: Crimped wire anchors for welding to frame, 0.25 inch thick, with trapezoidal wire ties 0.1875 inch thick, hot dip galvanized to ASTM A 153/A 153M, Class B.

G. Two-Piece Wall Ties: Formed steel wire, 0.1875 inch thick, adjustable, eye and pintle type, stainless steel, sized to provide not more than 1 inch and not less than 1/2 inch of mortar coverage from masonry face and to allow vertical adjustment of up to 1-1/4 in.

H. Masonry Veneer Anchors: 2-piece anchors that permit differential movement between masonry veneer and structural backup, Stainless Steel Wire: ASTM A 580/A 580M, AISI Type 304 and / or Stainless Steel Sheet: ASTM A 167, A 240, or A 666, AISI Type 316..
   1. Anchor plates: Not less than.093 inch thick, designed for fastening to structural backup through sheathing by two fasteners.
   2. Pintles: Trapezoidal, or rectangular shape shape, 0.1875 inch thick.
   3. Vertical adjustment: Not less than 2 inches.
   4. Manufacturers:
      a. HB-200-X anchor by Hohmann & Barnard, Inc.(/www.h-b.com)

2.05 FLASHINGS

A. See Section 076200 - Sheet Metal Flashing and Trim.

2.06 ACCESSORIES

A. Preformed Control Joints: Rubber material. Provide with corner and tee accessories, fused joints.

B. Joint Filler: Closed cell polyvinyl chloride; oversized 50 percent to joint width; self expanding.

C. Cavity Mortar Control: Semi-rigid polyethylene or polyester mesh panels, sized to thickness of wall cavity, duel level, trapezoidal shape and designed to prevent mortar droppings from clogging cavity weeps and allow proper cavity drainage.
   1. Mortar Diverter: Semi-rigid mesh designed for installation at flashing locations.
      a. Manufacturers:
         1) Mortar Net Solutions; MortarNet with Insect Barrier: www.mortarnet.com.
      b. Locations: At flashing locations in brick veneer walls.

D. Cavity Weeps and Vents: Polyester mesh.
   1. Manufacturers:
      a. CavClear/Archovations, Inc: www.cavclear.com.
      b. Mortar Net Solutions: www.mortarnet.com.
      c. Colors: selected from manufacturers standard range.

E. Masonry Sealer:
   1. Prosoco SureKlean Weather Seal PD Siloxane.
   2. Substitutions: See Section 016000 - Product Requirements.

F. Steel Shelf Angles and Lintels: galvanized, see Section 05 1200 - Structural Steel Framing and Section 05 5000 - Metal Fabrications.

G. Reinforcing Bar Positioners: Wire units designed to fit into mortar bed joints spanning masonry unit cells with loops for holding reinforcing bars in center of cells. Units are formed from 0.142inch (3.6mm) steel wire, hot-dip galvanized after fabrication. Provide units with either two loops or four loops as needed for number of bars indicated.

2.07 MORTAR AND GROUT MIXES

A. Mortar for Unit Masonry: ASTM C270, using the Proportion Specification.
   1. Masonry below grade and in contact with earth: Type S.
   2. Exterior, loadbearing masonry: Type S.
   3. Exterior, non-loadbearing masonry: Type N.
   4. Interior, loadbearing masonry: Type S.
   5. Interior, non-loadbearing masonry: Type N.

B. Mortar Type S: minimum 1800 psi, ASTM C 270.

C. Mortar Type N: One (1) part Portland Cement, one (1) part hydrated lime, and six (6) parts sand.

D. Colored Mortar: Proportion selected pigments and other ingredients to match Architect's sample, without exceeding manufacturer's recommended pigment-to-cement ratio.

E. Grout: ASTM C476; consistency required to fill completely volumes indicated for grouting; fine grout for spaces with smallest horizontal dimension of 2 inches or less; coarse grout for spaces with smallest horizontal dimension greater than 2 inches. Use grout of type indicated or, if not otherwise indicated, of type (fine or coarse) that will comply with Table 1.15.1 of ACI 530.1/ASCE 6/TMS 602 and ACI 530/ASCE 5 for dimensions of grout spaces and pour height. Provide grout with a slump of 8 to 11 inches as measured according to ASTM C 143/C 143M.

F. Admixtures: Add to mixture at manufacturer's recommended rate and in accordance with manufacturer's instructions; mix uniformly.

G. Mixing: Use mechanical batch mixer and comply with referenced standards.

2.08 SOURCE QUALITY CONTROL

A. Owner may engage a qualified independent testing agency to perform source quality-control testing indicated below. Payment for these services will be made by Owner.

B. Brick Tests: For each type and grade of brick indicated, units will be tested according to ASTM C 67.

C. Concrete Masonry Unit Tests: For each type of concrete masonry unit indicated, units will be tested according to ASTM C 140.

PART 3 EXECUTION

3.01 EXAMINATION

A. Verify that field conditions are acceptable and are ready to receive masonry.

B. Verify that related items provided under other sections are properly sized and located.

C. Verify that built-in items are in proper location, and ready for roughing into masonry work.

3.02 PREPARATION

A. Direct and coordinate placement of metal anchors supplied for installation under other sections.

B. Provide temporary bracing during installation of masonry work. Maintain in place until building structure provides permanent bracing.

3.03 INSTALLATION - GENERAL

A. Comply with ACI 530.1/ASCE 6, ACI 530/ASCE 5, and other requirements indicated applicable to each type of installation included in Project.

B. Use full size units without cutting, if possible.
   1. If cutting is required to provide a continuous pattern or to fit adjoining construction, cut units with motor-driven saws; provide clean, sharp, unchipped edges.
   2. Allow units to dry before laying unless wetting of units is specified.
   3. Install cut units with cut surfaces and, where possible, cut edges concealed.

C. Select and arrange units for exposed unit masonry to produce a uniform blend of colors and textures.
   1. Mix units from several pallets as they are placed.

D. Wetting of Brick:
   1. Wet brick before laying if initial rate of absorption exceeds 30 g/30 sq. in. per minute when tested per ASTM C 67.
   2. Allow units to absorb water so they are damp but not wet at time of laying.

E. Cover tops of all partially completed walls at end of day to protect completed work and prevent water from entering the cavity.

F. Grouting: Do not place grout until entire height of masonry to be grouted has attained enough strength to resist grout pressure.
   1. Comply with requirements in ACI 530.1/ASCE 6/TMS 602 for cleanouts and for grout placement, including minimum grout space and maximum pour height.

3.04 COLD AND HOT WEATHER REQUIREMENTS

A. Comply with requirements of ACI 530/530.1/ERTA or applicable building code, whichever is more stringent.

3.05 COURSING

A. Establish lines, levels, and coursing indicated. Protect from displacement.

B. Maintain masonry courses to uniform dimension. Form vertical and horizontal joints of uniform thickness.

C. Concrete Masonry Units:
   1. Bond: Running.
   2. Coursing: One unit and one mortar joint to equal 8 inches.
   3. Mortar Joints: Concave.

D. Brick Units:
   1. Bond: Running.
   2. Coursing: Two units and two mortar joints to equal 8 inches.
   3. Mortar Joints: Concave.

3.06 PLACING AND BONDING

A. Lay solid masonry units in full bed of mortar, with full head joints, uniformly jointed with other work.

B. Lay hollow masonry units with face shell bedding on head and bed joints.

C. Buttering corners of joints or excessive furrowing of mortar joints is not permitted.

D. Remove excess mortar and mortar smears as work progresses.

E. Remove excess mortar with water repellent admixture promptly. Do not use acids, sandblasting or high pressure cleaning methods.

F. Interlock intersections and external corners.

G. Do not shift or tap masonry units after mortar has achieved initial set. Where adjustment must be made, remove mortar and replace.

H. Perform job site cutting of masonry units with proper tools to provide straight, clean, unchipped edges. Prevent broken masonry unit corners or edges.

I. Cut mortar joints flush where wall tile is scheduled, cement parging is required, or resilient base is scheduled. Use square outside corners where wall tile is scheduled, corner guards are shown. Use bullnose outside corners at typical outside CMU corner.

J. Isolate masonry partitions from vertical structural framing members with a control joint as indicated.

K. Isolate top joint of masonry partitions from horizontal structural framing members and slabs or decks with compressible joint filler.

3.07 WEEPS/CAVITY VENTS

A. Install weeps in veneer and cavity walls at 16 inches on center horizontally above through-wall flashing, above shelf angles and lintels, and at bottom of walls.

B. Place weeps directly on flashing.

C. Do not strike mortar across bottom of weep.
   1. If mortar is struck across weep, remove and replace weep.

D. Install cavity vents in veneer and cavity walls at 24 inches on center horizontally near top of walls.

3.08 CAVITY MORTAR CONTROL

A. Do not permit mortar to drop or accumulate into cavity air space or to plug weep/cavity vents.

B. For cavity walls, build inner wythe ahead of outer wythe to accommodate accessories.

C. Install cavity mortar diverter at base of cavity full width of air space and at other flashing locations as recommended by manufacturer to prevent mortar droppings from blocking weep/cavity vents.

3.09 REINFORCEMENT AND ANCHORAGE - GENERAL

A. Unless otherwise indicated on drawings or specified under specific wall type, install horizontal joint reinforcement 16 inches on center.

B. Place masonry joint reinforcement in first and second horizontal joints above and below openings. Extend minimum 16 inches each side of opening.

C. Place continuous joint reinforcement in first and second joint below top of walls.

D. Lap joint reinforcement ends minimum 6 inches.

E. Reinforce joint corners and intersections with strap anchors 16 inches on center.

F. Fasten anchors to structural framing and embed in masonry joints as masonry is laid. Unless otherwise indicated on drawings or closer spacing is indicated under specific wall type, space anchors at maximum of 16 inches horizontally and 16 inches vertically.

3.10 REINFORCEMENT AND ANCHORAGE - SINGLE WYTHE MASONRY

A. Install horizontal joint reinforcement 16 inches on center.

B. Place masonry joint reinforcement in first and second horizontal joints above and below openings. Extend minimum 16 inches each side of opening.

C. Place continuous joint reinforcement in first and second joint below top of walls.

D. Lap joint reinforcement ends minimum 6 inches.

3.11 REINFORCEMENT AND ANCHORAGE - MASONRY VENEER

A. Masonry Back-Up: Embed anchors to bond veneer at maximum 16 inches on center vertically and 16 inches on center horizontally. Place additional anchors at perimeter of openings and ends of panels, so maximum spacing of anchors is 8 inches on center.

B. Stud Back-Up: Secure veneer anchors to stud framed back-up and embed into masonry veneer at maximum 16 inches on center vertically and 16 inches on center horizontally. Place additional anchors at perimeter of openings and ends of panels, so maximum spacing of anchors is 8 inches on center.

3.12 REINFORCEMENT AND ANCHORAGES - MULTIPLE WYTHE UNIT MASONRY

A. Install horizontal joint reinforcement 16 inches on center.

B. Place masonry joint reinforcement in first and second horizontal joints above and below openings. Extend minimum 16 inches each side of opening.

C. Place continuous joint reinforcement in first and second joint below top of walls.

D. Lap joint reinforcement ends minimum 6 inches.

E. Support and secure reinforcing bars from displacement. Maintain position within 1/2 inch of dimensioned position.

F. Fasten anchors to structural framing and embed in masonry joints as masonry is laid. Space anchors at maximum of 16 inches horizontally and 16 inches vertically.

3.13 MASONRY FLASHINGS

A. Whether or not specifically indicated, install masonry flashing to divert water to exterior at all locations where downward flow of water will be interrupted.
   1. Extend flashings full width at such interruptions and at least 6 inches, minimum, into adjacent masonry or turn up at least 8 inches, minimum, to form watertight pan at non-masonry construction.
   2. Remove or cover protrusions or sharp edges that could puncture flashings.
   3. Seal lapped ends with a minimum of two beads of continuous sealant from leading edge of horizontal surface across and up entire height of vertical/sloped surface. Seal penetrations of flashing before covering with mortar.
   4. Fold flashing to create end dams at discontinuous ends. Turn up one course.
   5. Seal penetrations of flashing materials at cast stone and other anchors with compatible sealant or mastic.

B. Extend metal flashings flush with the exterior face of masonry. Install flashing in two beads of butyl joint sealer Type 3 below flashing to prevent moisture migration under flashing. Refer to Section 07 9200 - Joint Sealants.

C. Lap end joints of metal flashings at least 6 inches (152 mm) and seal watertight with Sealant Type 3.
   1. Refer to Sections 07 6200 - Sheet Metal Flashing and Trim and 07 9200 - Joint Sealants.

3.14 LINTELS

A. Install loose steel lintels over openings.

B. Maintain minimum 8 inch bearing on each side of opening.

3.15 GROUTED COMPONENTS

A. Reinforce bond beams as noted on the Contract Drawings.

B. Lap splices minimum 24 bar diameters.

C. Support and secure reinforcing bars from displacement. Maintain position within 1/2 inch of dimensioned position.

D. Place and consolidate grout fill without displacing reinforcing.

E. At bearing locations, fill masonry cores with grout for a minimum 12 inches either side of opening.

F. Limit height of vertical grout pours to not more than 60 inches (1520 mm).

3.16 CONTROL AND EXPANSION JOINTS

A. Do not continue horizontal joint reinforcement through control or expansion joints.

B. Form control joint with a sheet building paper bond breaker fitted to one side of the hollow contour end of the block unit. Fill the resultant core with grout fill. Rake joint at exposed unit faces for placement of backer rod and sealant.

C. Size control joints as indicated on drawings; if not indicated, 3/8 inch wide and deep.

D. Form expansion joint as detailed on drawings.

3.17 BUILT-IN WORK

A. As work progresses, install built-in metal door frames, window frames, anchor bolts, plates, and louvers and other items to be built into the work and furnished under other sections.

B. Install built-in items plumb, level, and true to line.

C. Bed anchors of metal door and glazed frames in adjacent mortar joints. Fill frame voids solid with grout.

1. Fill adjacent masonry cores with grout minimum 12 inches from framed openings.

D. Do not build into masonry construction organic materials that are subject to deterioration.

3.18 TOLERANCES

A. Maximum Variation from Alignment of Columns: 1/4 inch.

B. Maximum Variation From Unit to Adjacent Unit: 1/16 inch.

C. Maximum Variation from Plane of Wall: 1/4 inch in 10 ft and 1/2 inch in 20 ft or more.

D. Maximum Variation from Plumb: 1/4 inch per story non-cumulative; 1/2 inch in two stories or more.

E. Maximum Variation from Level Coursing: 1/8 inch in 3 ft and 1/4 inch in 10 ft; 1/2 inch in 30 ft.

F. Maximum Variation of Mortar Joint Thickness: Head joint, minus 1/4 inch, plus 3/8 inch.

G. Maximum Variation from Cross Sectional Thickness of Walls: 1/4 inch.

3.19 CUTTING AND FITTING

A. Cut and fit for chases, pipes, conduit, sleeves, grounds, and other items. Coordinate with other sections of work to provide correct size, shape, and location.

B. Obtain approval prior to cutting or fitting masonry work not indicated or where appearance or strength of masonry work may be impaired.

3.20 FIELD QUALITY CONTROL

A. An independent testing agency will perform field quality control tests, as specified in Section 01 4000 - Quality Requirements.

B. Concrete Masonry Unit Tests: Test each variety of concrete unit masonry in accordance with ASTM C140/C140M for conformance to requirements of this specification.

C. Mortar Tests: Test each type of mortar in accordance with ASTM C780, testing with same frequency as masonry samples.

3.21 CLEANING

A. Remove excess mortar and mortar droppings.

B. Replace defective mortar. Match adjacent work.

C. Clean soiled surfaces with cleaning solution.

D. Use non-metallic tools in cleaning operations.

3.22 PROTECTION

A. Without damaging completed work, provide protective boards at exposed external corners that are subject to damage by construction activities.

END OF SECTION

SECTION 04 4301
STONE MASONRY VENEER

PART 1 GENERAL

1.01 SECTION INCLUDES

A. Cut stone veneer at base of calcium silicate and cast stone exterior walls.

B. Metal anchors and accessories.

C. Setting mortar.

1.02 RELATED REQUIREMENTS

A. Section 04 2000 - Unit Masonry: Joint reinforcement, Ties, Anchors, and Mortar.

B. Section 04 7200 - Cast Stone Masonry

C. Section 04 7313 - Calcium Silicate Manufactured Stone Masonry

D. Section 07 6200 - Sheet Metal Flashing and Trim: Flashings.

E. Section 07 9200 - Joint Sealants: Sealing joints indicated to be left open for sealant.

1.03 REFERENCE STANDARDS

A. ACI 530/530.1/ERTA - Building Code Requirements and Specification for Masonry Structures and Related Commentaries; 2011.

B. ASTM A666 - Standard Specification for Annealed or Cold-Worked Austenitic Stainless Steel Sheet, Strip, Plate, and Flat Bar; 2015.

C. ASTM C615/C615M - Standard Specification for Granite Dimension Stone; 2011.

D. NBGQA (SPEC) - Specifications for Architectural Granite; National Building Granite Quarries Association, Inc.; www.nbgqa.com; 2007.

1.04 ADMINISTRATIVE REQUIREMENTS

A. Preinstallation Meeting: See Section 04 2000 - Unit Masonry.

1.05 SUBMITTALS

A. See Section 01 3000 - Administrative Requirements, for submittal procedures.

B. Product Data: Provide data on stone units, mortar, and reinforcement.

C. Samples: Submit two stone samples, 8 inches square minimum, illustrating color range, texture, and markings.

1.06 QUALITY ASSURANCE

A. Stone Fabricator Qualifications: Company specializing in fabricating cut stone with minimum ten years of documented experience.

1.07 MOCK-UP

A. See Section 04 2000 - Unit Masonry.

1.08 DELIVERY, STORAGE, AND HANDLING

A. Protect stone from discoloration during storage on site.

1.09 FIELD CONDITIONS

A. Cold Weather Requirements: Comply with requirements of ACI 530/530.1/ERTA or applicable building code, whichever is more stringent.

PART 2 PRODUCTS

2.01 STONE

A. Granite, complying with ASTM C615/C615M:
   1. Acceptable Producers:
      a. Cold Spring Granite Inc.; Sierra White: www.coldspringgranite.com.
      b. New England Stone; Bethel White: www.newenglandstone.com.
      c. North Carolina Granite Corporation; Bethel White: www.ncgranite.com.

B. Surface Texture: Honed.

C. Color: White/Grey.

2.02 MORTAR

A. Setting and Pointing Mortar: ASTM C270, Type N, using the Proportion Method as specified in Section 04 2000.

2.03 ACCESSORIES

A. Flashings: Stanless steel type as specified in Section 07 6200.

B. Weep/Cavity Vents: Polyethylene tubing.

C. Cleaning Solution: Type that will not harm stone, joint materials, or adjacent surfaces.

2.04 STONE FABRICATION

A. Actual thickness: 3-5/8 inches.

B. Actual face size: 11-5/8 inches x 23-5/8".

C. Pattern and coursing: running bond.

D. Fabricate for 3/8 inch beds and joints.

E. Bed and Joint Surfaces:
   1. Cut or sawn full square for full thickness of unit.

F. Backs: Sawn.

G. Fabricate stone per requirements, as shown on Drawings, and as follows:
   1. Granite Fabrication: Comply with NBGQA's "Specifications for Architectural Granite."
   2. Fabrication Tolerances: In accordance with NBGQA (SPEC).

H. Fabricate units for uniform coloration between adjacent units and over the full area of the installation.

I. Form stone corners to quirk mitered joint profile. Clean jagged corners from stone in preparation for setting.

J. Finish exposed faces and edges of stone, except sawed reveals, to comply with requirements indicated for finish and to match final samples and mockups.

K. Provide chases, reveals, reglets, openings, and similar features as required to accommodate adjacent work.

PART 3 EXECUTION

3.01 EXAMINATION

A. Verify that support work and site conditions are ready to receive work of this section.

B. Verify that items built-in under other sections are properly located and sized.

3.02 PREPARATION

A. Establish lines, levels, and coursing. Protect from disturbance.

B. Clean stone prior to erection. Do not use wire brushes or implements that mark or damage exposed surfaces.

3.03 INSTALLATION

A. Install flashings of longest practical length and seal watertight to back-up. Lap end joints minimum 6 inches and seal watertight.

B. Size stone units to fit opening dimensions and perimeter conditions.

C. Arrange stone pattern to provide color uniformity and minimize visual variations.

D. Provide setting and pointing mortar in accordance with Section 04 2000.

E. Arrange stone coursing in running bond with consistent joint width.

F. Set stone in full mortar setting bed to fully support stone over bearing surface. Use setting buttons or shims to maintain correct joint width.

G. Install weep/cavity vents in vertical stone joints at 24 inches on center horizontally; immediately above horizontal flashings, above shelf angles and supports, and at top of each cavity space; do not permit mortar accumulation in cavity space.

3.04 JOINTS

A. Leave the following joints open for sealant:
   1. Joints in projecting units.
   2. Joints below ledge and relieving angles.
   3. Joints labeled "expansion joint".

B. Rake out mortar joints 5/8 to 3/4 inch and brush joints clean to accommodate pointing mortar. Fill joints with pointing mortar.

C. Pack mortar into joints and work into voids. Neatly tool surface to concave joint.

D. At joints to be sealed, clean mortar out of joint before it sets. Brush joints clean.

3.05 CLEANING

A. Remove excess mortar as work progresses, and upon completion of work.

B. Clean soiled surfaces with cleaning solution.

C. Use non-metallic tools in cleaning operations.

3.06 PROTECTION

A. During temporary storage on site, at the end of working day, and during rainy weather, cover stone work exposed to weather with non-staining waterproof coverings, securely anchored.

END OF SECTION

SECTION 04 7200
CAST STONE MASONRY

PART 1 GENERAL

1.01 SECTION INCLUDES

A. Architectural cast stone.

B. Units required are:
   1. Exterior wall units, including sills and keystones.
   2. Other items indicated on the drawings.

1.02 RELATED REQUIREMENTS

A. Section 04 2000 - Unit Masonry: Installation of cast stone in conjunction with masonry.

B. Section 07 9200 - Joint Sealants: Sealing joints indicated to be left open for sealant.

1.03 REFERENCE STANDARDS

A. ACI 318 - Building Code Requirements for Structural Concrete and Commentary; 2014 (Errata 2016).

B. ASTM A123/A123M - Standard Specification for Zinc (Hot-Dip Galvanized) Coatings on Iron and Steel Products; 2015.

C. ASTM A615/A615M - Standard Specification for Deformed and Plain Carbon Steel Bars for Concrete Reinforcement; 2015.

D. ASTM A767/A767M - Standard Specification for Zinc-Coated (Galvanized) Steel Bars for Concrete Reinforcement; 2009 (Reapproved 2015).

E. ASTM A884/A884M - Standard Specification for Epoxy-Coated Steel Wire and Welded Wire Reinforcement; 2014.

F. ASTM A1064/A1064M - Standard Specification for Carbon-Steel Wire and Welded Wire Reinforcement, Plain and Deformed, for Concrete; 2015.

G. ASTM C33/C33M - Standard Specification for Concrete Aggregates; 2013.

H. ASTM C150/C150M - Standard Specification for Portland Cement; 2015.

I. ASTM C270 - Standard Specification for Mortar for Unit Masonry; 2014a.

J. ASTM C494/C494M - Standard Specification for Chemical Admixtures for Concrete; 2013.

K. ASTM C1364 - Standard Specification for Architectural Cast Stone; 2016.

1.04 SUBMITTALS

A. See Section 01 3000 - Administrative Requirements, for submittal procedures.

B. Product Data: Test results of cast stone components made previously by the manufacturer.

C. Shop Drawings: Include elevations, dimensions, layouts, profiles, cross sections, reinforcement, exposed faces, arrangement of joints, anchoring methods, anchors, and piece numbers.

D. Mortar Color Selection Samples.

E. Verification Samples: Pieces of actual cast stone components not less than 6 inches square, illustrating range of color and texture to be anticipated in components furnished for the project.

F. Source Quality Control Test Reports.

G. Manufacturer's Qualification Data: Documentation showing compliance with specified requirements.

1.05 QUALITY ASSURANCE

A. Manufacturer Qualifications:
   1. A firm with a minimum of 5 years experience producing cast stone of types required for project.
   2. Current producer member of the Cast Stone Institute or the Architectural Precast Association.
   3. Adequate plant capacity to furnish quality, sizes, and quantity of cast stone required without delaying progress of the work.

B. Mock-Up: Provide full size cast stone components for installation in mock-up of exterior wall.

   1. Approved mock-up will become standard for appearance and workmanship.
   2. Mock-up may remain as part of the completed work.
   3. Remove mock-up not incorporated into the work and dispose of debris.

1.06 DELIVERY, STORAGE, AND HANDLING

A. Deliver cast stone components secured to shipping pallets and protected from damage and discoloration. Protect corners from damage.

B. Number each piece individually to match shop drawings and schedule.

C. Store cast stone components and installation materials in accordance with manufacturer's instructions.

D. Store cast stone components on pallets with nonstaining, waterproof covers. Ventilate under covers to prevent condensation. Prevent contact with dirt.

E. Protect cast stone components during handling and installation to prevent chipping, cracking, or other damage.

F. Store mortar materials where contamination can be avoided.

G. Schedule and coordinate production and delivery of cast stone components with unit masonry work to optimize on-site inventory and to avoid delaying the work.

PART 2 PRODUCTS

2.01 MANUFACTURERS

A. Architectural Cast Stone:
   1. Any current producer member of the Architectural Precast Association.
   2. Any current producer member of the Cast Stone Institute.

2.02 ARCHITECTURAL CAST STONE

A. Cast Stone: Architectural concrete product manufactured to simulate appearance of natural limestone, complying with ASTM C1364.
   1. Compressive Strength: As specified in ASTM C1364; calculate strength of pieces to be field cut at 80 percent of uncut piece.
   2. Freeze-Thaw Resistance: Demonstrated by field experience.
   3. Surface Texture: Fine grained texture, with no bugholes, air voids, or other surface blemishes visible from distance of 20 feet.
   4. Remove cement film from exposed surfaces before packaging for shipment.

B. Shapes: Provide shapes indicated on drawings.
   1. Variation from Any Dimension, Including Bow, Camber, and Twist: Maximum of plus/minus 1/8 inch or length divided by 360, whichever is greater, but not more than 1/4 inch.

2. Unless otherwise indicated on drawings, provide:
   a. Wash or slope of 1:12 on exterior horizontal surfaces.
   b. Drips on projecting components, wherever possible.
   c. Raised fillets at back of sills and at ends to be built in.

C. Reinforcement: Provide reinforcement as required to withstand handling and structural stresses; comply with ACI 318.

2.03 MATERIALS

A. Portland Cement: ASTM C150/C150M.
   1. For Mortar: Type I or II, except Type III may be used in cold weather.

B. Coarse Aggregate: ASTM C33/C33M, except for gradation; granite, quartz, or limestone.

C. Fine Aggregate: ASTM C33/C33M, except for gradation; natural or manufactured sands.

D. Admixtures: ASTM C494/C494M.

E. Water: Potable.

F. Reinforcing Bars: ASTM A615/A615M deformed bars, galvanized.
   1. Galvanized in accordance with ASTM A767/A767M, Class I.

G. Steel Welded Wire Reinforcement: ASTM A1064/A1064M, galvanized or ASTM A884/A884M, epoxy coated.

H. Embedded Anchors, Dowels, and Inserts: Type 304 stainless steel, of type and size as required for conditions.

I. Shelf Angles and Similar Structural Items: Hot-dip galvanized steel per ASTM A123/A123M, of shapes and sizes as required for conditions.

J. Mortar: Portland cement-lime, ASTM C270, Type N; do not use masonry cement.

K. Cleaner: General-purpose cleaner designed for removing mortar and grout stains, efflorescence, and other construction stains from new masonry surfaces without discoloring or damaging masonry surfaces; approved for intended use by cast stone manufacturer and by cleaner manufacturer for use on cast stone and adjacent masonry materials.

PART 3 EXECUTION

3.01 EXAMINATION

A. Examine construction to receive cast stone components. Notify Architect if construction is not acceptable.

B. Do not begin installation until unacceptable conditions have been corrected.

3.02 INSTALLATION

A. Install cast stone components in conjunction with masonry, complying with requirements of Section 04 2000.

B. Mechanically anchor cast stone units indicated; set remainder in mortar.

C. Setting:
   1. Drench cast stone components with clear, running water immediately before installation.
   2. Set units in a full bed of mortar unless otherwise indicated.
   3. Fill vertical joints with mortar.
   4. Fill dowel holes and anchor slots completely with mortar or non-shrink grout.

D. Joints: Make all joints 3/8 inch, except as otherwise detailed.
   1. Rake mortar joints 3/4 inch for pointing.

2. Remove excess mortar from face of stone before pointing joints.
3. Point joints with mortar in layers 3/8 inch thick and tool to a slight concave profile.
4. Leave the following joints open for sealant:
   a. Head joints in top courses, including copings, parapets, cornices, sills, and steps.
   b. Joints in projecting units.
   c. Joints between rigidly anchored units, including soffits, panels, and column covers.
   d. Joints below lugged sills and stair treads.
   e. Joints below ledge and relieving angles.
   f. Joints labeled "expansion joint".

E. Repairs: Repair chips and other surface damage noticeable when viewed in direct daylight at 20 feet.
   1. Repair with matching touchup material provided by the manufacturer and in accordance with manufacturer's instructions.
   2. Repair methods and results subject to Architect 's approval.

3.03 CLEANING

A. Keep cast stone components clean as work progresses.

3.04 PROTECTION

A. Protect completed work from damage.

B. Clean, repair, or restore damaged or mortar-splashed work to condition of new work.

3.05 SCUEDULE

A. Provide window sills, keystones and other trim as shown.

END OF SECTION

SECTION 04 7313
CALCIUM SILICATE MANUFACTURED STONE MASONRY

PART 1 - GENERAL

1.01 SECTION INCLUDES

A. Calcium silicate masonry units.

1.02 RELATED SECTIONS

A. Section 04 2000 - Masonry Anchorage, Accessories and Reinforcing.

B. Section 04 4301 - Stone Veneer at grade

C. Section 04 7200 - Cast Stone Masonry.

D. Section 05 5000 - Metal Fabrications: loose steel lintels.

E. Section 07 9005 - Joint Sealants.

1.03 REFERENCES

A. ACI 530/ASCE 5/TMS 402, Building Code Requirements for Masonry Structures.

B. ACI 530.1/ASCE 6/TMS 602, Specifications for Masonry Structures.

C. ASTM C73: Standard Specification for Calcium Silicate Face Brick.

D. ASTM C97: Standard Test Methods for Absorption and Bulk Specific Gravity of Dimension Stone.

E. ASTM C99, Standard Test Method for Modulus of Rupture of Dimension Stone.

F. ASTM C170, Standard Test Method for Compressive Strength of Dimension Stone.

1.04 SAMPLES

A. Samples: Three full size samples, illustrating color and texture.

1.05 TEST REPORTS

A. Test Reports: test results prepared by an independent testing agency, indicating tested material characteristics as part of a source quality control program, current within the past five (5) years.

1.06 QUALITY ASSURANCE

A. Manufacturer Qualifications: manufacturer having sufficient plant facilities to produce the shapes, quantities and size of Products required in accordance with the project schedule.

B. Installer: Company or person specializing in commercial masonry work with 5 years documented experience.

C. Mock-up: Supply sufficient quantity of full size calcium silicate masonry units for use in constructing mock-up panel, as specified in Section 04 2000.

1.07 DELIVERY, STORAGE AND HANDLING

A. Deliver calcium silicate masonry units in protective film. Prevent damage to units.

B. Lift skids with proper and sufficiently long slings or forks with protection to prevent damage to units. Protect edges and corners.

C. Store units in a manner designed to prevent damage and staining of units.

D. Stack units on timbers or platforms at least 3 inches above grade.

E. Place polyethylene or other plastic film between wood and other finished surfaces of units when stored for extended periods of time.

F. Cover stored units with protective enclosure if exposed to weather.

G. Do not use salt or calcium-chloride to remove ice from masonry surfaces.

1.08 ENVIRONMENTAL REQUIREMENTS

A. Refer to Section 04 2000.
   1. Conform to requirements of ACI 530.1/ASCE 6/TMS 602, Specifications for Masonry Structures, PART 1.8.

PART 2 PRODUCTS

2.01 MANUFACTURERS

A. Manufacturers of calcium silicate masonry units having Products considered acceptable for use:
   1. Arriscraft International.

2.02 MATERIALS

A. Calcium Silicate Masonry Units : to ASTM C73, Grade SW; solid units that have been pressure formed and autoclaved; 3-5/8" bed depth; special shapes as indicated; and as follows:
   1. Modular Size: 11-5/8" high, 23-5/8" long and special sizesas indicated on Drawings;
   2. Texture: smooth finish on exposed faces and ends;
   3. Color: As selected by Architect;
   4. Compressive Strength: 6,815 psi, when tested to ASTM C170.
   5. Absorption: 10.3 percent, when tested to ASTM C97.
   6. Density: 120 lb/ft3, when tested to ASTM C97.
   7. Modulus of Rupture: 800 psi, when tested to ASTM C99.
   8. Mortar: 1:1:6 Portland cement-hydrated lime-sand mix.
   9. Wall Ties and Anchorages: as specified in Section 04 2000.
   10. Joint Sealants and Backer Rods: non-staining typeas specified in Section 07 9200.
   11. Flashing, Vents, and Masonry Accessories: as specified in Section 04 2000.

2.03 FABRICATION TOLERANCES

A. Fabricate calcium silicate masonry units to the following tolerances:
   1. Unit Length: plus or minus 1/16".
   2. Unit Height: plus or minus 1/16".
   3. Deviation from Square: plus or minus 1/16", with measurement taken using the longest edge as the base.
   4. Bed Depth: plus or minus 1/8".
   5. Custom Unit Dimensions: plus or minus 1/8".

2.04 SOURCE QUALITY CONTROL

A. Test compressive strength and absorption from specimens selected at random from plant production.

PART 3 EXECUTION

3.01 EXAMINATION

A. Verify site conditions are ready to receive work.

B. Inspect materials for fit and finish prior to installation. Do not set unacceptable units.

C. Beginning of installation means acceptance of existing conditions.

3.02 CUTTING MASONRY UNITS

A. Cut masonry units with wet-saw.

B. Pre-soak units using clean water prior to cutting.

C. Clean cut units using a stiff fiber brush and clean water. Allow units to surface dry prior to placement.

D. Finish cut edges to match face when exposed in wall.

3.03 WETTING MASONRY UNITS

A. Where the ambient air temperature exceeds 100°F or exceeds 90°F with a wind velocity greater than 8 mph, pre-wet masonry units.

B. Lay wetted units when surface dry.

3.04 COURSING

A. Maintain calcium silicate masonry units 8 inches above grade, on masonry base course.

B. Maintain masonry courses to uniform width. Make vertical and horizontal joints equal and of uniform thickness.

C. Lay masonry units in runnning bond, as shown.

D. Flashing Tape: Apply continuously behind anchor onto sheathing/waterproof membrane to create watertight seal around fasteners.

E. Course one masonry unit and one mortar joint to equal 12 inches, or as shown.
   1. Maintain mortar joint thickness of 3/8 inch.
   2. Tool joints, when thumbprint hard, to a concave finish.

3.05 PLACING AND BONDING

A. Lay masonry in full bed of mortar, properly jointed with other work. Buttering corners of joints, deep or excessive furrowing of mortar joints is not permitted.

B. Fully bond intersections, and external corners.

C. Do not adjust masonry units after laying. Where resetting of masonry is required, remove, clean units and reset in new mortar.

D. Install loose steel lintels as scheduled.

E. Install wall ties and anchorages as specified in Section 04 2000.

F. Install flashings and masonry accessories as specified in Section 04 2000.
   1. Construct movement joints as specified in Section 04 2000.

3.06 SITE TOLERANCES

A. Erect masonry within the tolerances described in ACI 530.1/ASCE 6/TMS 602, Specifications for Masonry Structures, PART 3.3G.

3.07 FIELD QUALITY CONTROL

A. Architect Inspection: Architect will inspect installed masonry and reject masonry that is chipped, cracked, or blemished (streaked, stained or otherwise damaged), as described below.
   1. Masonry will be inspected to be free of cracks or other blemishes on the finished face or front edges of the masonry units exceeding 3/8 inch or that can be seen from a distance of 10 feet.
   2. Units shall exhibit a texture approximately equal to the approved sample when viewed under diffused daylight illumination at a 20 foot distance.
   3. Minor chipping resulting from shipment and delivery shall not be grounds for rejection. Minor chips shall not be obvious under diffused daylight illumination from a 20 foot distance.

4. Efflorescence will not be cause for rejection.
5. Correct rejected masonry as directed by Architect.

3.08 ADJUSTING AND CLEANING

A. Repair chips on smooth finished units with patch kits furnished by manufacturer.
   1. Clean masonry units as specified in Section 04 2000.
   2. Clean a 100 square foot area of wall designated by Architect as directed below and leave for one week. If no harmful effects appear, all objectionable stains have been removed and after mortar has set and cured, clean masonry as follows:
      a. Protect windows, sills, doors, trim and other work from damage.
      b. Remove large particles with stiff fiber brushes without damaging surface.
      c. Saturate masonry with clean water and flush off loose mortar and dirt.
      d. Dilute cleaning agent with clean water in controlled proportions.
      e. Apply solution to pre-soaked wall surface using soft-bristled brush.
      f. Thoroughly rinse cleaning solution and residue from wall surface.
   3. Use alternative cleaning solutions and methods for difficult to clean masonry only after consultation with masonry unit manufacturer.

3.09 PROTECTION

A. Protect units from damage resulting from subsequent construction operations.
   1. Use protection materials and methods which will not stain or damage units.
   2. Remove protection materials upon Substantial Completion, or when risk of damage is no longer present.

END OF SECTION

SECTION 051200 – STRUCTURAL STEEL

PART 1 - GENERAL

1.1 RELATED DOCUMENTS

A. Drawings and general provisions of the Contract, including General and Supplementary Conditions and Division 1 Specification Sections, apply to this Section.

1.2 SUMMARY

A. This Section includes the following:

1. Structural steel.
2. Grout.

B. Related Sections include the following:

1. Division 1 Section "Quality Requirements" for independent testing agency procedures and administrative requirements.
2. Division 5 Section "Steel Deck" for field installation of shear connectors.
3. Division 5 Section "Metal Fabrications" for steel lintels or shelf angles not attached to structural-steel frame miscellaneous steel fabrications and other metal items not defined as structural steel.
4. Division 9 painting Sections for surface preparation and priming requirements.

1.3 DEFINITIONS

A. Structural Steel: Elements of structural-steel frame, as classified by AISC's "Code of Standard Practice for Steel Buildings and Bridges," that support design loads.

1.4 PERFORMANCE REQUIREMENTS

A. Connections: Provide details of simple shear connections required by the Contract Documents to be selected or completed by structural-steel fabricator to withstand ASD-service loads indicated and comply with other information and restrictions indicated.

1. Select and complete connections using schematic details indicated and AISC's "Manual of Steel Construction, Allowable Stress Design," Part 4

B. Construction: Type 2, simple framing.

1.5 SUBMITTALS

A. Product Data: For each type of product indicated.

B. Shop Drawings: Show fabrication of structural-steel components.

1. Include details of cuts, connections, splices, camber, holes, and other pertinent data.
2. Include embedment drawings.
3. Indicate welds by standard AWS symbols, distinguishing between shop and field welds, and show size, length, and type of each weld.
4. Indicate type, size, and length of bolts, distinguishing between shop and field bolts. Identify pretensioned and slip-critical high-strength bolted connections.

C. Welding certificates.

D. Qualification Data: For Installer, fabricator, professional engineer, testing agency.

E. Mill Test Reports: Signed by manufacturers certifying that the following products comply with requirements:

1. Structural steel including chemical and physical properties.
2. Bolts, nuts, and washers including mechanical properties and chemical analysis.
3. Direct-tension indicators.
4. Tension-control, high-strength bolt-nut-washer assemblies.
5. Shear stud connectors.
6. Shop primers.
7. Nonshrink grout.

F. Source quality-control test reports.

1.6 QUALITY ASSURANCE

A. Fabricator Qualifications: A qualified fabricator that participates in the AISC Quality Certification Program and is designated an AISC-Certified Plant, Category STD. If the fabricator does not have the AISC certification they can still bid the project but they are responsible to have a third party inspector inspect the fabrication process to ensure they are meeting AISC guidelines.

B. Installer Qualifications: A qualified installer who participates in the AISC Quality Certification Program and is designated an AISC-Certified Erector, Category CSE.

C. Shop-Painting Applicators: Qualified according to AISC's Sophisticated Paint Endorsement P1 or SSPC-QP 3, "Standard Procedure for Evaluating Qualifications of Shop Painting Applicators."

D. Welding: Qualify procedures and personnel according to AWS D1.1, "Structural Welding Code--Steel."

E. Comply with applicable provisions of the following specifications and documents:

1. AISC's "Code of Standard Practice for Steel Buildings and Bridges."
2. AISC's "Seismic Provisions for Structural Steel Buildings" and "Supplement No. 2."
3. AISC's "Specification for Structural Steel Buildings--Allowable Stress Design and Plastic Design."
4. AISC's "Specification for the Design of Steel Hollow Structural Sections."
5. AISC's "Specification for Allowable Stress Design of Single-Angle Members"
6. RCSC's "Specification for Structural Joints Using ASTM A 325 or A 490 Bolts."

F. Mockups: Build mockups of architecturally exposed structural steel to set quality standards for fabrication and installation.

1. Coordinate finish painting requirements with Division 9 painting Sections.
2. Approved mockups may become part of the completed Work if undisturbed at time of Substantial Completion.

G. Preinstallation Conference: Conduct conference at Project site to comply with requirements in Division 1 Section "Project Management and Coordination."

1.7 DELIVERY, STORAGE, AND HANDLING

A. Store materials to permit easy access for inspection and identification. Keep steel members off ground and spaced by using pallets, dunnage, or other supports and spacers. Protect steel members and packaged materials from erosion and deterioration.

1. Store fasteners in a protected place. Clean and relubricate bolts and nuts that become dry or rusty before use.
2. Do not store materials on structure in a manner that might cause distortion, damage, or overload to members or supporting structures. Repair or replace damaged materials or structures as directed.

1.8 COORDINATION

A. Furnish anchorage items to be embedded in or attached to other construction without delaying the Work. Provide setting diagrams, sheet metal templates, instructions, and directions for installation.

PART 2 - PRODUCTS

2.1 STRUCTURAL-STEEL MATERIALS

A. W-Shapes: ASTM A 992/A 992M.

B. Channels, Angles, M, S-Shapes: ASTM A 36/A 36M.

C. Plate and Bar: ASTM A 36/A 36M.

D. Corrosion-Resisting Structural Steel: ASTM A 588/A 588M, Grade 50 (345).

E. Cold-Formed Hollow Structural Sections: ASTM A 500, Grade B, structural tubing.

F. Corrosion-Resisting Cold-Formed Hollow Structural Sections: ASTM A 847, structural tubing.

G. Steel Pipe: ASTM A 53/A 53M, Type E or S, Grade B.

1. Weight Class: Standard, Extra strong, or Double-extra strong, as indicated.
2. Finish: Black, except where indicated to be galvanized.

H. Medium-Strength Steel Castings: ASTM A 27/A 27M, Grade 65-35 (Grade 450-240), carbon steel.

I. High-Strength Steel Castings: ASTM A 148/A 148M,Grade 80-50 (Grade 550-345), carbon or alloy steel.

J. Welding Electrodes: Comply with AWS requirements.

2.2 BOLTS, CONNECTORS, AND ANCHORS

A. High-Strength Bolts, Nuts, and Washers: ASTM A 325 (ASTM A 325M), Type 1, heavy hex steel structural bolts; ASTM A 563 (ASTM A 563M) heavy hex carbon-steel nuts; and ASTM F 436 (ASTM F 436M) hardened carbon-steel washers.

1. Finish: Plain.
2. Direct-Tension Indicators: ASTM F 959, Type 325 (ASTM F 959M, Type 8.8,) compressible-washer type.

a. Finish: Plain

B. Shear Connectors: ASTM A 108, Grades 1015 through 1020, headed-stud type, cold-finished carbon steel; AWS D1.1, Type B.

C. Unheaded Anchor Rods: ASTM F 1554, Grade 36

1. Configuration: Straight or Hooked, as indicated.
2. Nuts: ASTM A 563 (ASTM A 563M) heavy hex carbon steel.
3. Plate Washers: ASTM A 36/A 36M carbon steel.
4. Washers: ASTM F 436 (ASTM F 436M) hardened carbon steel.
5. Finish: Plain

D. Headed Anchor Rods: ASTM F 1554, Grade 36 straight.

1. Nuts: ASTM A 563 (ASTM A 563M) heavy hex carbon steel.
2. Plate Washers: ASTM A 36/A 36M carbon steel.
3. Washers: ASTM F 436 (ASTM F 436M) hardened carbon steel.
4. Finish: Plain

E. Threaded Rods: ASTM A 36/A 36M

1. Nuts: ASTM A 563 (ASTM A 563M) heavy hex carbon steel.
2. Washers: ASTM F 436 (ASTM F 436M) hardened carbon steel.
3. Finish: Plain

F. Eye Bolts and Nuts: ASTM A 108, Grade 1030, cold-finished carbon steel.

G. Sleeve Nuts: ASTM A 108, Grade 1018, cold-finished carbon steel.

2.3 PRIMER

A. Primer: SSPC-Paint 25, Type I, iron oxide, zinc oxide, raw linseed oil, and alkyd.

B. Primer: Fabricator's standard lead- and chromate-free, nonasphaltic, rust-inhibiting primer.

C. Galvanizing Repair Paint: ASTM A 780.

2.4 GROUT

A. Cement Grout: Portland cement, ASTM C 150, Type I; and clean, natural sand, ASTM C 404, Size No. 2. Mix at ratio of 1 part cement to 2-1/2 parts sand, by volume, with minimum water required for placement and hydration.

B. Metallic, Shrinkage-Resistant Grout: ASTM C 1107, factory-packaged, metallic aggregate grout, mixed with water to consistency suitable for application and a 30-minute working time.

2.5 FABRICATION

A. Structural Steel: Fabricate and assemble in shop to greatest extent possible. Fabricate according to AISC's "Code of Standard Practice for Steel Buildings and Bridges" and AISC's "Specification for Structural Steel Buildings--Allowable Stress Design and Plastic Design

1. Camber structural-steel members where indicated.
2. Identify high-strength structural steel according to ASTM A 6/ A 6M and maintain markings until structural steel has been erected.
3. Mark and match-mark materials for field assembly.
4. Complete structural-steel assemblies, including welding of units, before starting shop-priming operations.

B. Thermal Cutting: Perform thermal cutting by machine to greatest extent possible.

1. Plane thermally cut edges to be welded to comply with requirements in AWS D1.1.

C. Bolt Holes: Cut, drill, mechanically thermal cut, or punch standard bolt holes perpendicular to metal surfaces.

D. Finishing: Accurately finish ends of columns and other members transmitting bearing loads.

E. Cleaning: Clean and prepare steel surfaces that are to remain unpainted according to SSPC-SP 3, "Power Tool Cleaning."

F. Shear Connectors: Prepare steel surfaces as recommended by manufacturer of shear connectors. Use automatic end welding of headed-stud shear connectors according to AWS D1.1 and manufacturer's written instructions.

G. Welded Door Frames: Build up welded door frames attached to structural steel. Weld exposed joints continuously and grind smooth. Plug-weld fixed steel bar stops to frames. Secure removable stops to frames with countersunk, cross-recessed head machine screws, uniformly spaced not more than 10 inches (250 mm) o.c., unless otherwise indicated.

H. Holes: Provide holes required for securing other work to structural steel and for passage of other work through steel framing members.

1. Cut, drill, or punch holes perpendicular to steel surfaces. Do not thermally cut bolt holes or enlarge holes by burning.
2. Base-Plate Holes: Cut, drill, mechanically thermal cut, or punch holes perpendicular to steel surfaces.
3. Weld threaded nuts to framing and other specialty items indicated to receive other work.

2.6 SHOP CONNECTIONS

A. High-Strength Bolts: Shop install high-strength bolts according to RCSC's "Specification for Structural Joints Using ASTM A 325 or A 490 Bolts" for type of bolt and type of joint specified.

1. Joint Type: Snug tightened.

B. Weld Connections: Comply with AWS D1.1 for welding procedure specifications, tolerances, appearance, and quality of welds and for methods used in correcting welding work.

1. Remove backing bars or runoff tabs, back gouge, and grind steel smooth.
2. Assemble and weld built-up sections by methods that will maintain true alignment of axes without exceeding tolerances of AISC's "Code of Standard Practice for Steel Buildings and Bridges" for mill material.
3. Verify that weld sizes, fabrication sequence, and equipment used for architecturally exposed structural steel will limit distortions to allowable tolerances. Prevent weld show-through on exposed steel surfaces.

   a. Grind butt welds flush.
   b. Grind or fill exposed fillet welds to smooth profile. Dress exposed welds.

2.7 SHOP PRIMING

A. Shop prime steel surfaces except the following:

1. Surfaces embedded in concrete or mortar. Extend priming of partially embedded members to a depth of 2 inches (50 mm).
2. Surfaces to be field welded.
3. Surfaces to be high-strength bolted with slip-critical connections.
4. Surfaces to receive sprayed fire-resistive materials.
5. Galvanized surfaces.

B. Surface Preparation: Clean surfaces to be painted. Remove loose rust and mill scale and spatter, slag, or flux deposits. Prepare surfaces according to the following specifications and standards:
1. SSPC-SP 3, "Power Tool Cleaning."

C. Priming: Immediately after surface preparation, apply primer according to manufacturer's written instructions and at rate recommended by SSPC to provide a dry film thickness of not less than 1.5 mils (0.038 mm). Use priming methods that result in full coverage of joints, corners, edges, and exposed surfaces.

1. Stripe paint corners, crevices, bolts, welds, and sharp edges.
2. Apply two coats of shop paint to inaccessible surfaces after assembly or erection. Change color of second coat to distinguish it from first.

D. Painting: Apply a 1-coat, nonasphaltic primer complying with SSPC-PS Guide 7.00, "Painting System Guide 7.00: Guide for Selecting One-Coat Shop Painting Systems," to provide a dry film thickness of not less than 1.5 mils (0.038 mm).

2.8 GALVANIZING

A. Hot-Dip Galvanized Finish: Apply zinc coating by the hot-dip process to structural steel according to ASTM A 123/ A 123M.

1. Fill vent holes and grind smooth after galvanizing.
2. Galvanize lintels and shelf angles attached to structural-steel frame and located in exterior walls.

2.9 SOURCE QUALITY CONTROL

A. Owner will engage an independent testing and inspecting agency to perform shop tests and inspections and prepare test reports.

1. Provide testing agency with access to places where structural-steel work is being fabricated or produced to perform tests and inspections.

B. Correct deficiencies in Work that test reports and inspections indicate does not comply with the Contract Documents.

C. Bolted Connections: Shop-bolted connections will be tested and inspected according to RCSC's "Specification for Structural Joints Using ASTM A 325 or A 490 Bolts."

D. Welded Connections: In addition to visual inspection, shop-welded connections will be tested and inspected according to AWS D1.1 and the following inspection procedures, at testing agency's option:

1. Liquid Penetrant Inspection: ASTM E 165.
2. Magnetic Particle Inspection: ASTM E 709; performed on root pass and on finished weld. Cracks or zones of incomplete fusion or penetration will not be accepted.
3. Ultrasonic Inspection: ASTM E 164.
4. Radiographic Inspection: ASTM E 94.

E. In addition to visual inspection, shop-welded shear connectors will be tested and inspected according to requirements in AWS D1.1 for stud welding and as follows:

1. Bend tests will be performed if visual inspections reveal either a less-than- continuous 360-degree flash or welding repairs to any shear connector.
2. Tests will be conducted on additional shear connectors if weld fracture occurs on shear connectors already tested, according to requirements in AWS D1.1.

PART 3 - EXECUTION

3.1 EXAMINATION

A. Verify elevations of concrete- and masonry-bearing surfaces and locations of anchor rods, bearing plates, and other embedments, with steel erector present, for compliance with requirements.

B. Proceed with installation only after unsatisfactory conditions have been corrected.

3.2 PREPARATION

A. Provide temporary shores, guys, braces, and other supports during erection to keep structural steel secure, plumb, and in alignment against temporary construction loads and loads equal in intensity to design loads. Remove temporary supports when permanent structural steel, connections, and bracing are in place, unless otherwise indicated.

3.3 ERECTION

A. Set structural steel accurately in locations and to elevations indicated and according to AISC's "Code of Standard Practice for Steel Buildings and Bridges" and "Specification for Structural Steel Buildings--Allowable Stress Design and Plastic Design."

B. Base and Bearing Plates: Clean concrete- and masonry-bearing surfaces of bond-reducing materials, and roughen surfaces prior to setting base and bearing plates. Clean bottom surface of base and bearing plates.

1. Set base and bearing plates for structural members on wedges, shims, or setting nuts as required.
2. Weld plate washers to top of base plate.
3. Snug-tighten anchor rods after supported members have been positioned and plumbed. Do not remove wedges or shims but, if protruding, cut off flush with edge of base or bearing plate before packing with grout.
4. Promptly pack grout solidly between bearing surfaces and base or bearing plates so no voids remain. Neatly finish exposed surfaces; protect grout and allow to cure. Comply with manufacturer's written installation instructions for shrinkage-resistant grouts.

C. Maintain erection tolerances of structural steel and architecturally exposed structural steel within AISC's "Code of Standard Practice for Steel Buildings and Bridges."

D. Align and adjust various members forming part of complete frame or structure before permanently fastening. Before assembly, clean bearing surfaces and other surfaces that will be in permanent contact with members. Perform necessary adjustments to compensate for discrepancies in elevations and alignment.

1. Level and plumb individual members of structure.
2. Make allowances for difference between temperature at time of erection and mean temperature when structure is completed and in service.

E. Splice members only where indicated.

F. Remove erection bolts on welded, architecturally exposed structural steel; fill holes with plug welds; and grind smooth at exposed surfaces.

G. Do not use thermal cutting during erection unless approved by Architect. Finish thermally cut sections within smoothness limits in AWS D1.1].

H. Do not enlarge unfair holes in members by burning or using drift pins. Ream holes that must be enlarged to admit bolts.

I. Shear Connectors: Prepare steel surfaces as recommended by manufacturer of shear connectors. Use automatic end welding of headed-stud shear connectors according to AWS D1.1 and manufacturer's written instructions.

3.4 FIELD CONNECTIONS

A. High-Strength Bolts: Install high-strength bolts according to RCSC's "Specification for Structural Joints Using ASTM A 325 or A 490 Bolts" for type of bolt and type of joint specified.

1. Joint Type: Snug tightened.

B. Weld Connections: Comply with AWS D1.1 for welding procedure specifications, tolerances, appearance, and quality of welds and for methods used in correcting welding work.

1. Comply with AISC's "Code of Standard Practice for Steel Buildings and Bridges" and "Specification for Structural Steel Buildings--Allowable Stress Design and Plastic Design for bearing, adequacy of temporary connections, alignment, and removal of paint on surfaces adjacent to field welds.
2. Remove backing bars or runoff tabs, back gouge, and grind steel smooth.
3. Assemble and weld built-up sections by methods that will maintain true alignment of axes without exceeding tolerances of AISC's "Code of Standard Practice for Steel Buildings and Bridges" for mill material.
4. Verify that weld sizes, fabrication sequence, and equipment used for architecturally exposed structural steel will limit distortions to allowable tolerances. Prevent weld show-through on exposed steel surfaces.

   a. Grind butt welds flush.
   b. Grind or fill exposed fillet welds to smooth profile. Dress exposed welds.

3.5 FIELD QUALITY CONTROL

A. Testing Agency: Owner will engage a qualified independent testing and inspecting agency to inspect field welds and high-strength bolted connections.

B. Bolted Connections: Shop-bolted connections will be tested and inspected according to RCSC's "Specification for Structural Joints Using ASTM A 325 or A 490 Bolts."

C. Welded Connections: Field welds will be visually inspected according to AWS D1.1.

1. In addition to visual inspection, field welds will be tested according to AWS D1.1 and the following inspection procedures, at testing agency's option:

   a. Liquid Penetrant Inspection: ASTM E 165.
   b. Magnetic Particle Inspection: ASTM E 709; performed on root pass and on finished weld. Cracks or zones of incomplete fusion or penetration will not be accepted.
   c. Ultrasonic Inspection: ASTM E 164.
   d. Radiographic Inspection: ASTM E 94.

D. In addition to visual inspection, test and inspect field-welded shear connectors according to requirements in AWS D1.1 for stud welding and as follows:

1. Perform bend tests if visual inspections reveal either a less-than- continuous 360-degree flash or welding repairs to any shear connector.
2. Conduct tests on additional shear connectors if weld fracture occurs on shear connectors already tested, according to requirements in AWS D1.1.

E. Correct deficiencies in Work that test reports and inspections indicate does not comply with the Contract Documents.

3.6 REPAIRS AND PROTECTION

A. Repair damaged galvanized coatings on galvanized items with galvanized repair paint according to ASTM A 780 and manufacturer's written instructions.

B. Touchup Painting: After installation, promptly clean, prepare, and prime or reprime field connections, rust spots, and abraded surfaces of prime-painted joists and accessories, bearing plates, and abutting structural steel.

1. Clean and prepare surfaces by SSPC-SP 2 hand-tool cleaning or SSPC-SP 3 power-tool cleaning.
2. Apply a compatible primer of same type as shop primer used on adjacent surfaces.

C. Touchup Painting: Cleaning and touchup painting are specified in Division 9 painting Sections.

END OF SECTION 051200

SECTION 052100 - STEEL JOIST FRAMING

PART 1 - GENERAL

1.1 RELATED DOCUMENTS

A. Drawings and general provisions of the Contract, including General and Supplementary Conditions and Division 01 Specification Sections, apply to this Section.

1.2 SUMMARY

A. This Section includes the following:

1. K-series steel joists.
2. KCS-type K-series steel joists.
3. Long-span steel joists.
4. Joist accessories.

B. Related Sections include the following:

1. Division 03 Section "Cast-in-Place Concrete" for installing bearing plates in concrete.
2. Division 04 Section "Unit Masonry" for installing bearing plates in unit masonry.

1.3 DEFINITIONS

A. SJI "Specifications" : Steel Joist Institute's "Standard Specifications, Load Tables and Weight Tables for Steel Joists and Joist Girders."

B. Special Joists: Steel joists or joist girders requiring modification by manufacturer to support nonuniform, unequal, or special loading conditions that invalidate load tables in SJI's "Specifications."

1.4 PERFORMANCE REQUIREMENTS

A. Structural Performance: Provide special joists and connections capable of withstanding design loads indicated.

B. Design special joists to withstand design loads with live load deflections no greater than the following:
1. Roof Joists: Vertical deflection of 1/240 of the span.

1.5 SUBMITTALS

A. Product Data: For each type of joist, accessory, and product indicated.

B. Shop Drawings: Show layout, designation, number, type, location, and spacings of joists. Include joining and anchorage details, bracing, bridging, joist accessories; splice and connection locations and details; and attachments to other construction.

1. Indicate locations and details of bearing plates to be embedded in other construction.
2. Comprehensive engineering analysis of special joists signed and sealed by the qualified professional engineer responsible for its preparation.

C. Welding certificates.

D. Manufacturer Certificates: Signed by manufacturers certifying that joists comply with requirements.

E. Mill Certificates: Signed by bolt manufacturers certifying that bolts comply with requirements.

F. Qualification Data: For manufacturer.

G. Field quality-control test and inspection reports.

H. Research/Evaluation Reports: For joists.

1.6 QUALITY ASSURANCE

A. Manufacturer Qualifications: A manufacturer certified by SJI to manufacture joists complying with applicable standard specifications and load tables of SJI "Specifications."

1. Manufacturer's responsibilities include providing professional engineering services for designing special joists to comply with performance requirements.

B. SJI Specifications: Comply with standard specifications in SJI's "Specifications" that are applicable to types of joists indicated.

C. Welding: Qualify procedures and personnel according to AWS D1.1/D1.1M, "Structural Welding Code - Steel."

1.7 DELIVERY, STORAGE, AND HANDLING

A. Deliver, store, and handle joists as recommended in SJI's "Specifications."

B. Protect joists from corrosion, deformation, and other damage during delivery, storage, and handling.

1.8 SEQUENCING

A. Deliver steel bearing plates to be built into masonry construction.

PART 2 - PRODUCTS

2.1 MATERIALS

A. Steel: Comply with SJI's "Specifications" for web and steel-angle chord members.

B. Steel Bearing Plates: ASTM A 36/A 36M.

C. Carbon-Steel Bolts and Threaded Fasteners: ASTM A 307, Grade A (ASTM F 568M, Property Class 4.6), carbon-steel, hex-head bolts and threaded fasteners; carbon-steel nuts; and flat, unhardened steel washers.

1. Finish: Plain, uncoated.

D. High-Strength Bolts, Nuts, and Washers: ASTM A 325 (ASTM A 325M), Type 1, heavy hex steel structural bolts; ASTM A 563 (ASTM A 563M) heavy hex carbon-steel nuts; and ASTM F 436 (ASTM F 436M) hardened carbon-steel washers.

1. Finish: Plain.

E. Welding Electrodes: Comply with AWS standards.

F. Galvanizing Repair Paint: MPI#18, MPI#19, or SSPC-Paint 20, ASTM A 780.

2.2 PRIMERS

A. Primer: SSPC-Paint 15, or manufacturer's standard shop primer complying with performance requirements in SSPC-Paint 15.

2.3 K-SERIES STEEL JOISTS

A. Manufacture steel joists of type indicated according to "Standard Specifications for Open Web Steel Joists, K-Series" in SJI's "Specifications," with steel-angle top- and bottom-chord members, underslung ends, and parallel top chord.

1. Joist Type: K-series steel joists and KCS-type K-series steel joists.

B. Steel Joist Substitutes: Manufacture according to "Standard Specifications for Open Web Steel Joists, K-Series" in SJI's "Specifications," with steel-angle or -channel members.

C. Comply with AWS requirements and procedures for shop welding, appearance, quality of welds, and methods used in correcting welding work.

D. Provide holes in chord members for connecting and securing other construction to joists.

E. Top-Chord Extensions: Extend top chords of joists a maximum of 1'-6" with SJI's Type S top-chord extensions where indicated, complying with SJI's "Specifications" and meeting Total Allowable Load of 550 lb/ft and Allowable Live Load of 450 lb/ft.

F. Extended Ends: Extend bearing ends of joists with SJI's Type R extended ends where indicated, complying with SJI's "Specifications" and meeting Total Allowable Load of 550 lb/ft and Allowable Live Load of 450 lb/ft.

G. Camber joists according to SJI's "Specifications." or as indicated.

H. Equip bearing ends of joists with manufacturer's standard beveled ends or sloped shoes if joist slope exceeds 1/4 inch per 12 inches (1:48).

2.4 LONG-SPAN STEEL JOISTS

A. Manufacture steel joists according to "Standard Specifications for Longspan Steel Joists, LH-Series and Deep Longspan Steel Joists, DLH-Series" in SJI's "Specifications," with steel-angle top- and bottom-chord members; of joist type and end and top-chord arrangements as follows or as indicated:

1. Joist Type: LH-series steel joists and DLH-series steel joists.
2. End Arrangement: Underslung.
3. Top-Chord Arrangement: Parallel or pitched if indicated.

B. Comply with AWS requirements and procedures for shop welding, appearance, quality of welds, and methods used in correcting welding work.

C. Provide holes in chord members for connecting and securing other construction to joists.

D. Camber long-span steel joists according to SJI's "Specifications."

E. Equip bearing ends of joists with manufacturer's standard beveled ends or sloped shoes if joist slope exceeds 1/4 inch per 12 inches (1:48).

2.5 JOIST ACCESSORIES

A. Bridging: Provide bridging anchors and number of rows of horizontal or diagonal bridging of material, size, and type required by SJI's "Specifications" for type of joist, chord size, spacing, and span. Furnish additional erection bridging if required for stability. Provide additional bridging as indicated on structural drawings.

B. Fabricate steel bearing plates with integral anchorages of sizes and thicknesses indicated. Shop prime paint.

C. Supply ceiling extensions, either extended bottom-chord elements or a separate extension unit of enough strength to support ceiling construction. Extend ends to within 1/2 inch (13 mm) of finished wall surface, unless otherwise indicated.

D. Supply miscellaneous accessories, including splice plates and bolts required by joist manufacturer to complete joist installation.

2.6 CLEANING AND SHOP PAINTING

A. Clean and remove loose scale, heavy rust, and other foreign materials from fabricated joists and accessories by hand-tool cleaning, SSPC-SP 2 or power-tool cleaning, SSPC-SP 3.

B. Do not prime paint joists and accessories to receive sprayed fire-resistive materials.

C. Apply 1 coat of shop primer to joists and joist accessories to be primed to provide a continuous, dry paint film not less than 1 mil (0.025 mm) thick.

D. Shop priming of joists and joist accessories is specified in Division 09 painting Sections.

PART 3 - EXECUTION

3.1 EXAMINATION

A. Examine supporting substrates, embedded bearing plates, and abutting structural framing for compliance with requirements for installation tolerances and other conditions affecting performance.

1. Proceed with installation only after unsatisfactory conditions have been corrected.

3.2 INSTALLATION

A. Do not install joists until supporting construction is in place and secured.

B. Install joists and accessories plumb, square, and true to line; securely fasten to supporting construction according to SJI's "Specifications," joist manufacturer's written recommendations, and requirements in this Section.

1. Before installation, splice joists delivered to Project site in more than one piece.
2. Space, adjust, and align joists accurately in location before permanently fastening.
3. Install temporary bracing and erection bridging, connections, and anchors to ensure that joists are stabilized during construction.
4. Delay rigidly connecting bottom-chord extensions to columns or supports until dead loads have been applied.

C. Field weld joists to supporting steel bearing plates and framework. Coordinate welding sequence and procedure with placement of joists. Comply with AWS requirements and

procedures for welding, appearance and quality of welds, and methods used in correcting welding work.

D. Bolt joists to supporting steel framework using carbon-steel bolts.

E. Bolt joists to supporting steel framework using high-strength structural bolts. Comply with RCSC's "Specification for Structural Joints Using ASTM A 325 or ASTM A 490 Bolts" for high-strength structural bolt installation and tightening requirements.

F. Install and connect bridging concurrently with joist erection, before construction loads are applied. Anchor ends of bridging lines at top and bottom chords if terminating at walls or beams.

3.3 FIELD QUALITY CONTROL

A. Testing Agency: Owner will engage a qualified independent testing and inspecting agency to inspect field welds and bolted connections and to perform field tests and inspections and prepare test and inspection reports.

B. Field welds will be visually inspected according to AWS D1.1/D1.1M.

C. In addition to visual inspection, field welds will be tested according to AWS D1.1/D1.1M and the following procedures, as applicable:

1. Radiographic Testing: ASTM E 94.
2. Magnetic Particle Inspection: ASTM E 709.
3. Ultrasonic Testing: ASTM E 164.
4. Liquid Penetrant Inspection: ASTM E 165.

D. Bolted connections will be visually inspected.

E. High-strength, field-bolted connections will be tested and verified according to procedures in RCSC's "Specification for Structural Joints Using ASTM A 325 or ASTM A 490 Bolts."

F. Correct deficiencies in Work that test and inspection reports have indicated are not in compliance with specified requirements.

G. Additional testing will be performed to determine compliance of corrected Work with specified requirements.

3.4 REPAIRS AND PROTECTION

A. Repair damaged galvanized coatings on galvanized items with galvanized repair paint according to ASTM A 780 and manufacturer's written instructions.

B. Touchup Painting: After installation, promptly clean, prepare, and prime or reprime field connections, rust spots, and abraded surfaces of prime-painted joists, bearing plates, abutting structural steel, and accessories.

1. Clean and prepare surfaces by hand-tool cleaning, SSPC-SP 2, or power-tool cleaning, SSPC-SP 3.
2. Apply a compatible primer of same type as shop primer used on adjacent surfaces.

C. Touchup Painting: Cleaning and touchup painting are specified in Division 09 painting Sections.

D. Provide final protection and maintain conditions, in a manner acceptable to manufacturer and Installer, that ensure that joists and accessories are without damage or deterioration at time of Substantial Completion.

END OF SECTION 052100

SECTION 053100 - STEEL DECK

PART 1 - GENERAL

1.1 RELATED DOCUMENTS

A. Drawings and general provisions of the Contract, including General and Supplementary Conditions and Division 01 Specification Sections, apply to this Section.

1.2 SUMMARY

A. This Section includes the following:

1. Roof deck.
2. Acoustical cellular roof deck.
3. Composite floor deck.
4. Acoustical cellular composite floor deck.

B. Related Sections include the following:

1. Division 03 Section "Cast-in-Place Concrete" for concrete fill.
2. Division 05 Section "Structural Steel" for shop- and field-welded shear connectors.
3. Division 05 Section "Metal Fabrications" for framing deck openings with miscellaneous steel shapes.
4. Division 09 painting Sections for repair painting of primed deck.
5. Division 16 Section "Underfloor Raceways" for preset inserts, activation kits, after set inserts, service fittings, header ducts, and trench header ducts used with cellular floor-deck systems.

1.3 SUBMITTALS

A. Product Data: For each type of deck, accessory, and product indicated.

B. Shop Drawings: Show layout and types of deck panels, anchorage details, reinforcing channels, pans, cut deck openings, special jointing, accessories, and attachments to other construction.

C. Product Certificates: For each type of steel deck, signed by product manufacturer.

D. Welding certificates.

E. Field quality-control test and inspection reports.

F. Product Test Reports: Based on evaluation of comprehensive tests performed by a qualified testing agency, indicating that each of the following complies with requirements:

1. Power-actuated mechanical fasteners.
2. Acoustical roof deck.

3. Acoustical floor deck.

G. Research/Evaluation Reports: For steel deck.

1.4 QUALITY ASSURANCE

A. Testing Agency Qualifications: An independent agency qualified according to ASTM E 329 for testing indicated.

B. Welding: Qualify procedures and personnel according to AWS D1.3, "Structural Welding Code - Sheet Steel."

C. Fire-Test-Response Characteristics: Where indicated, provide steel deck units identical to those tested for fire resistance per ASTM E 119 by a testing and inspecting agency acceptable to authorities having jurisdiction.

1. Fire-Resistance Ratings: Indicated by design designations of applicable testing and inspecting agency.
2. Steel deck units shall be identified with appropriate markings of applicable testing and inspecting agency.

D. AISI Specifications: Comply with calculated structural characteristics of steel deck according to AISI's "North American Specification for the Design of Cold-Formed Steel Structural Members."

E. Electrical Raceway Units: Provide UL-labeled cellular floor-deck units complying with UL 209 and listed in UL's "Electrical Construction Equipment Directory" for use with standard header ducts and outlets for electrical distribution systems.

F. FMG Listing: Provide steel roof deck evaluated by FMG and listed in its "Approval Guide, Building Materials" for Class 1 fire rating and Class 1-90 windstorm ratings.

1.5 DELIVERY, STORAGE, AND HANDLING

A. Protect steel deck from corrosion, deformation, and other damage during delivery, storage, and handling.

B. Stack steel deck on platforms or pallets and slope to provide drainage. Protect with a waterproof covering and ventilate to avoid condensation.

1. Protect and ventilate acoustical cellular roof deck with factory-installed insulation to maintain insulation free of moisture.

1.6 COORDINATION

A. Coordinate installation of sound-absorbing insulation strips in topside ribs of acoustical deck with roofing installation specified in Division 07 to ensure protection of insulation strips against damage from effects of weather and other causes.

PART 2 - PRODUCTS

2.1 MANUFACTURERS

A. Available Manufacturers: Subject to compliance with requirements, manufacturers offering products that may be incorporated into the Work include, but are not limited to, the following:

B. Manufacturers: Subject to compliance with requirements, provide products by one of the following:

1. Steel Deck:

a. ASC Profiles, Inc.
b. Canam Steel Corp.;The Canam Manac Group.
c. Consolidated Systems, Inc.
d. DACS, Inc.
e. D-Mac Industries Inc.
f. Epic Metals Corporation.
g. Marlyn Steel Decks, Inc.
h. New Millennium Building Systems, LLC.
i. Nucor Corp.; Vulcraft Division.
j. Roof Deck, Inc.
k. United Steel Deck, Inc.
l. Valley Joist; Division of EBSCO Industries, Inc.
m. Verco Manufacturing Co.
n. Wheeling Corrugating Company; Div. of Wheeling-Pittsburgh Steel Corporation.

2.2 ROOF DECK

A. Steel Roof Deck: Fabricate panels, without top-flange stiffening grooves, to comply with "SDI Specifications and Commentary for Steel Roof Deck," in SDI Publication No. 30, and with the following:

1. Prime-Painted Steel Sheet: ASTM A 1008/A 1008M, Structural Steel (SS), Grade 33 minimum, shop primed with manufacturer's standard baked-on, rust-inhibitive primer.

a. Color: Manufacturer's standard

2. Galvanized Steel Sheet: ASTM A 653/A 653M, Structural Steel (SS), Grade 33 zinc coating.
3. Deck Profile: As indicated.
4. Profile Depth: As indicated.
5. Design Uncoated-Steel Thickness: As indicated.
6. Span Condition: Triple span or more.
7. Side Laps: Overlapped.

2.3 ACOUSTICAL ROOF DECK

A. Acoustical Steel Roof Deck: Fabricate panels, without top-flange stiffening grooves, to comply with "SDI Specifications and Commentary for Steel Roof Deck," in SDI Publication No. 30, and with the following:

1. Prime-Painted Steel Sheet: ASTM A 1008/A 1008M, Structural Steel (SS), Grade 33 minimum, shop primed with manufacturer's standard baked-on, rust-inhibitive primer.

   a. Color: Manufacturer's standard
2. Galvanized and Shop-Primed Steel Sheet: ASTM A 653/A 653M, Structural Steel (SS), Grade 33 zinc coating; cleaned, pretreated, and primed with manufacturer's standard baked-on, rust-inhibitive primer.

   a. Color: Manufacturer's standard
3. Deck Profile: As indicated
4. Cellular Deck Profile: As indicated
5. Profile Depth: As indicated
6. Design Uncoated-Steel Thickness: As indicated
7. Design Uncoated-Steel Thicknesses; Deck Unit/Bottom Plate: As indicated
8. Span Condition: Triple span or more
9. Side Laps: Overlapped
10. Acoustical Perforations: Cellular deck units with manufacturer's standard perforated flat-bottom plate welded to ribbed deck.
11. Sound-Absorbing Insulation: Manufacturer's standard premolded roll or strip of glass or mineral fiber.

    a. Factory install sound-absorbing insulation into cells of cellular deck.
    b. Installation of sound-absorbing insulation is specified in Division 07 Section

12. Acoustical Performance: NRC 0.60 for 1 ½" roof deck depth and NRC 0.70 for 3" roof deck depth, tested according to ASTM C 423 or as indicated on drawings.

2.4 COMPOSITE FLOOR DECK

A. Composite Steel Floor Deck: Fabricate panels, with integrally embossed or raised pattern ribs and interlocking side laps, to comply with "SDI Specifications and Commentary for Composite Steel Floor Deck," in SDI Publication No. 30, with the minimum section properties indicated, and with the following:
1. Galvanized Steel Sheet: ASTM A 653/A 653M, Structural Steel (SS), Grade 33 G60 zinc coating.
2. Profile Depth: As indicated.
3. Design Uncoated-Steel Thickness: As indicated.
4. Span Condition: Triple span or more.

2.5 ACOUSTICAL CELLULAR COMPOSITE FLOOR DECK

A. Acoustical Cellular Composite Steel Floor Deck: Fabricate panels, with integrally embossed or raised pattern ribs and interlocking side laps, to comply with "SDI Specifications and Commentary for Composite Steel Floor Deck," in SDI Publication No. 30, with the minimum section properties indicated, and with the following:
   1. Galvanized Steel Sheet: ASTM A 653/A 653M, Structural Steel (SS), Grade 33 G60 zinc coating.
   2. Cellular Deck Type: Composite
   3. Profile Depth: As indicated.
   4. Design Uncoated-Steel Thickness: As indicated.
   5. Design Uncoated-Steel Thicknesses; Deck Unit/Bottom Plate: As indicated
   6. Span Condition: Triple Span or more.
   7. Acoustical Perforations: Cellular deck units with manufacturer's standard perforated flat-bottom plate welded to ribbed deck.
   8. Sound-Absorbing Insulation: Manufacturer's standard premolded roll or strip of glass or mineral fiber.
      a. Factory install sound-absorbing insulation into cells of cellular deck.
      b. Installation of sound-absorbing insulation is specified in Division 07 Section
   9. Acoustical Performance: NRC 0.70 for 2” composite floor deck tested according to ASTM C 423 or as indicated on drawings.

2.6 ACCESSORIES

A. General: Provide manufacturer's standard accessory materials for deck that comply with requirements indicated.

B. Mechanical Fasteners: Corrosion-resistant, low-velocity, power-actuated or pneumatically driven carbon-steel fasteners; or self-drilling, self-threading screws.

C. Side-Lap Fasteners: Corrosion-resistant, hexagonal washer head; self-drilling, carbon-steel screws, No. 10 (4.8-mm) minimum diameter.

D. Flexible Closure Strips: Vulcanized, closed-cell, synthetic rubber.

E. Miscellaneous Sheet Metal Deck Accessories: Steel sheet, minimum yield strength of 33,000 psi (230 MPa), not less than 0.0359-inch (0.91-mm) design uncoated thickness, of same material and finish as deck; of profile indicated or required for application.

F. Pour Stops and Girder Fillers: Steel sheet, minimum yield strength of 33,000 psi (230 MPa), of same material and finish as deck, and of thickness and profile As indicated.

G. Column Closures, End Closures, Z-Closures, and Cover Plates: Steel sheet, of same material, finish, and thickness as deck, unless otherwise indicated.

H. Piercing Hanger Tabs: Piercing steel sheet hanger attachment devices for use with floor deck.

I. Weld Washers: Uncoated steel sheet, shaped to fit deck rib, 0.0598 inch (1.52 mm) thick, with factory-punched hole of 3/8-inch (9.5-mm) minimum diameter.

J. Recessed Sump Pans: Single-piece steel sheet, 0.0747 inch (1.90 mm) thick, of same material and finish as deck, with 3-inch- (76-mm-) wide flanges and sloped recessed pans of 1-1/2-inch (38-mm) minimum depth. For drains, cut holes in the field.

K. Flat Sump Plate: Single-piece steel sheet, 0.0747 inch (1.90 mm) thick, of same material and finish as deck. For drains, cut holes in the field.

L. Galvanizing Repair Paint: SSPC-Paint 20 or DOD-P-21035, with dry film containing a minimum of 94 percent zinc dust by weight.

M. Repair Paint: Manufacturer's standard rust-inhibitive primer of same color as primer.

PART 3 - EXECUTION

3.1 EXAMINATION

A. Examine supporting frame and field conditions for compliance with requirements for installation tolerances and other conditions affecting performance.

3.2 INSTALLATION, GENERAL

A. Install deck panels and accessories according to applicable specifications and commentary in SDI Publication No. 30, manufacturer's written instructions, and requirements in this Section.

B. Install temporary shoring before placing deck panels, if required to meet deflection limitations.

C. Locate deck bundles to prevent overloading of supporting members.

D. Place deck panels on supporting frame and adjust to final position with ends accurately aligned and bearing on supporting frame before being permanently fastened. Do not stretch or contract side-lap interlocks.

1. Align cellular deck panels over full length of cell runs and align cells at ends of abutting panels.

E. Place deck panels flat and square and fasten to supporting frame without warp or deflection.

F. Cut and neatly fit deck panels and accessories around openings and other work projecting through or adjacent to deck.

G. Provide additional reinforcement and closure pieces at openings as required for strength, continuity of deck, and support of other work.

H. Comply with AWS requirements and procedures for manual shielded metal arc welding, appearance and quality of welds, and methods used for correcting welding work.

I. Mechanical fasteners may be used in lieu of welding to fasten deck. Locate mechanical fasteners and install according to deck manufacturer's written instructions.

3.3 ROOF-DECK INSTALLATION

A. Fasten roof-deck panels to steel supporting members by arc spot (puddle) welds of the surface diameter indicated or arc seam welds with an equal perimeter that is not less than 1-1/2 inches (38 mm) long, and as follows:

1. Weld Diameter: 5/8 inch (16 mm) nominal.
2. Weld Spacing: Weld edge and interior ribs of deck units with a minimum of two welds per deck unit at each support. Space welds 18 inches (450 mm) apart, maximum or as indicated.
3. Weld Washers: Install weld washers at each weld location.

B. Side-Lap and Perimeter Edge Fastening: Fasten side laps and perimeter edges of panels between supports, at intervals not exceeding the lesser of 1/2 of the span or 36 inches (910 mm)], and as follows:

1. Mechanically fasten with self-drilling, No. 10 (4.8-mm-) diameter or larger, carbon-steel screws.
2. Mechanically clinch or button punch.
3. Fasten with a minimum of 1-1/2-inch- (38-mm-) long welds.

C. End Bearing: Install deck ends over supporting frame with a minimum end bearing of 1-1/2 inches (38 mm), with end joints as follows:

1. End Joints: Lapped 2 inches (51 mm) minimum.

D. Roof Sump Pans and Sump Plates: Install over openings provided in roof deck and weld or mechanically fasten flanges to top of deck. Space welds or mechanical fasteners not more than 12 inches (305 mm) apart with at least one weld or fastener at each corner.

1. Install reinforcing channels or zees in ribs to span between supports and weld or mechanically fasten.

E. Miscellaneous Roof-Deck Accessories: Install ridge and valley plates, finish strips, end closures, and reinforcing channels according to deck manufacturer's written instructions. Weld or mechanically fasten to substrate to provide a complete deck installation.

1. Weld cover plates at changes in direction of roof-deck panels, unless otherwise indicated.

F. Flexible Closure Strips: Install flexible closure strips over partitions, walls, and where indicated. Install with adhesive according to manufacturer's written instructions to ensure complete closure.

G. Sound-Absorbing Insulation: Installation into topside ribs of deck as specified in Division 07

3.4 FLOOR-DECK INSTALLATION

A. Fasten floor-deck panels to steel supporting members by arc spot (puddle) welds of the surface diameter indicated and as follows:

1. Weld Diameter: 5/8 inch (16 mm) nominal.
2. Weld Spacing: Weld edge ribs of panels at each support. Space additional welds an average of 12 inches (305 mm) apart, but not more than 18 inches (457 mm) apart.
3. Weld Spacing: Space and locate welds as indicated.
4. Weld Washers: Install weld washers at each weld location.

B. Side-Lap and Perimeter Edge Fastening: Fasten side laps and perimeter edges of panels between supports, at intervals not exceeding the lesser of half of the span or 36 inches (910 mm), and as follows:

1. Mechanically fasten with self-drilling, No. 10 (4.8-mm-) diameter or larger, carbon-steel screws.
2. Mechanically clinch or button punch.
3. Fasten with a minimum of 1-1/2-inch- (38-mm-) long welds.

C. End Bearing: Install deck ends over supporting frame with a minimum end bearing of 1-1/2 inches (38 mm)with end joints as follows:

1. End Joints: Lapped

D. Pour Stops and Girder Fillers: Weld steel sheet pour stops and girder fillers to supporting structure according to SDI recommendations, unless otherwise indicated.

E. Floor-Deck Closures: Weld steel sheet column closures, cell closures, and Z-closures to deck, according to SDI recommendations, to provide tight-fitting closures at open ends of ribs and sides of deck.

F. Install piercing hanger tabs at 14 inches (355 mm) apart in both directions, within 9 inches (228 mm) of walls at ends, and not more than 12 inches (305 mm) from walls at sides, unless otherwise indicated.

3.5 FIELD QUALITY CONTROL

A. Testing Agency: Engage a qualified independent testing and inspecting agency to perform field tests and inspections and prepare test reports.

B. Field welds will be subject to inspection.

C. Testing agency will report inspection results promptly and in writing to Contractor and Architect.

D. Remove and replace work that does not comply with specified requirements.

E. Additional inspecting, at Contractor's expense, will be performed to determine compliance of corrected work with specified requirements.

3.6 REPAIRS AND PROTECTION

A. Galvanizing Repairs: Prepare and repair damaged galvanized coatings on both surfaces of deck with galvanized repair paint according to ASTM A 780 and manufacturer's written instructions.

B. Repair Painting: Wire brush and clean rust spots, welds, and abraded areas on **both surfaces** of prime-painted deck immediately after installation, and apply repair paint.

1. Apply repair paint, of same color as adjacent shop-primed deck, to bottom surfaces of deck exposed to view.
2. Wire brushing, cleaning, and repair painting of bottom deck surfaces are included in Division 09 Section.

C. Provide final protection and maintain conditions to ensure that steel deck is without damage or deterioration at time of Substantial Completion.

END OF SECTION 053100

SECTION 054000 – COLD-FORMED METAL FRAMING

PART 1 - GENERAL

1.1 RELATED DOCUMENTS

A. Drawings and general provisions of the Contract, including General and Supplementary Conditions and Division 01 Specification Sections, apply to this Section.

1.2 SUMMARY

A. This Section includes the following:
   1. Exterior non-load-bearing wall framing.

B. Related Sections include the following:

   1. Division 05 Section "Metal Fabrications" for masonry shelf angles and connections.
   2. Division 09 Section "Non-Structural Metal Framing" for interior non-load-bearing, metal-stud framing and ceiling-suspension assemblies.
   3. Division 09 Section "Gypsum Board Shaft Wall Assemblies" for interior non-load-bearing, metal-stud-framed, shaft-wall assemblies.

1.3 PERFORMANCE REQUIREMENTS

1.4 SUBMITTALS

A. Product Data: For each type of cold-formed metal framing product and accessory indicated.

B. Shop Drawings: Design cold form framing walls per the applicable design loading & provide signed & sealed shop drawings by a Registered Professional Engineer in the State of Delaware indicating stud sizes, gauges, spacing, and connections / attachments to adjoining work.

C. Welding certificates.

D. Qualification Data: For testing agency.

E. Product Test Reports: From a qualified testing agency, unless otherwise stated, indicating that each of the following complies with requirements, based on evaluation of comprehensive tests for current products:

   1. Steel sheet.
   2. Expansion anchors.

3. Power-actuated anchors.
4. Mechanical fasteners.
5. Vertical deflection clips.
6. Horizontal drift deflection clips
7. Miscellaneous structural clips and accessories.

F. Research/Evaluation Reports: For cold-formed metal framing.

1.5 QUALITY ASSURANCE

A. Testing Agency Qualifications: An independent testing agency, acceptable to authorities having jurisdiction, qualified according to ASTM E 329 to conduct the testing indicated.

B. Product Tests: Mill certificates or data from a qualified independent testing agency indicating steel sheet complies with requirements, including base-metal thickness, yield strength, tensile strength, total elongation, chemical requirements, and metallic-coating thickness.

C. Welding: Qualify procedures and personnel according to AWS D1.1/D1.1M, "Structural Welding Code--Steel," and AWS D1.3, "Structural Welding Code--Sheet Steel."

D. Fire-Test-Response Characteristics: Where indicated, provide cold-formed metal framing identical to that of assemblies tested for fire resistance per ASTM E 119 by a testing and inspecting agency acceptable to authorities having jurisdiction.

E. AISI Specifications and Standards: Comply with AISI's "North American Specification for the Design of Cold-Formed Steel Structural Members" and its "Standard for Cold-Formed Steel Framing - General Provisions."

1. Comply with AISI's "Standard for Cold-Formed Steel Framing - Truss Design."
2. Comply with AISI's "Standard for Cold-Formed Steel Framing - Header Design."

F. Comply with AISI's "Standard for Cold-Formed Steel Framing - Prescriptive Method for One and Two Family Dwellings."

G. Preinstallation Conference: Conduct conference at Project site to comply with requirements in Division 01 Section "Project Management and Coordination."

1.6 DELIVERY, STORAGE, AND HANDLING

A. Protect cold-formed metal framing from corrosion, deformation, and other damage during delivery, storage, and handling.

B. Store cold-formed metal framing, protect with a waterproof covering, and ventilate to avoid condensation.

PART 2 - PRODUCTS

2.1 MANUFACTURERS

A. Available Manufacturers: Subject to compliance with requirements, manufacturers offering cold-formed metal framing that may be incorporated into the Work include, but are not limited to, the following:

B. Manufacturers: Subject to compliance with requirements, provide cold-formed metal framing by one of the following:
   1. AllSteel Products, Inc.
   2. Craco Metals Manufacturing, LLC.
   3. Dale/Incor.
   4. Dietrich Metal Framing; a Worthington Industries Company.
   5. MarinoWare; a division of Ware Industries.
   6. United Metal Products, Inc.

2.2 MATERIALS

A. Recycled Content of Steel Products: Provide products with an average recycled content of steel products so postconsumer recycled content plus one-half of preconsumer recycled content is not less than 25 percent.

B. Steel Sheet: ASTM A 1003/A 1003M, Structural Grade, Type H, metallic coated, of grade and coating weight as follows:

   1. Grade: As Indicated & designed by CFMF engineer.
   2. Coating: G60 (Z180).

C. Steel Sheet for Vertical Deflection and Drift Clips: ASTM A 653/A 653M, structural steel, zinc coated, of grade and coating as follows:

   1. Grade: 50 (340), Class 1 or 2.
   2. Coating: G60 (Z275).

2.3 EXTERIOR NON-LOAD-BEARING WALL FRAMING

A. Steel Studs: Manufacturer's standard C-shaped steel studs, of web depths indicated, punched, with stiffened flanges, and as follows:

   1. Minimum Base-Metal Thickness: 18 gauge at full height walls supporting metal panel / siding & 16 gauge at full height walls supporting masonry veneer. Final design to be performed & provided by CFMF manufacture's design professional engineer.
   2. Section Properties: As Indicated

B. Steel Track: Manufacturer's standard U-shaped steel track, of web depths indicated, unpunched, with unstiffened flanges, and as follows:

1. Minimum Base-Metal Thickness: 18 gauge
2. Flange Width: As Indicated

C. Vertical Deflection Clips: Manufacturer's standard bypass clips, capable of accommodating upward and downward vertical displacement of primary structure through positive mechanical attachment to stud web.

1. Available Manufacturers: Subject to compliance with requirements, manufacturers offering products that may be incorporated into the Work include, but are not limited to, the following:
2. Manufacturers: Subject to compliance with requirements, provide products by one of the following:

a. Dietrich Metal Framing; a Worthington Industries Company.
b. MarinoWare, a division of Ware Industries.
c. SCAFCO Corporation
d. The Steel Network, Inc.

D. Double Deflection Tracks: Manufacturer's double, deep-leg, U-shaped steel tracks, consisting of nested inner and outer tracks; unpunched, with unstiffened flanges.

1. Outer Track: Of web depth to allow free vertical movement of inner track, with flanges designed to support horizontal and lateral loads and transfer them to the primary structure, and as follows:

a. Minimum Base-Metal Thickness: 18 gauge

b. Flange Width: As Indicated.

2. Inner Track: Of web depth indicated, and as follows:

a. Minimum Base-Metal Thickness: 18 gauge
b. Flange Width: As Indicated

E. Drift Clips: Manufacturer's standard bypass or head clips, capable of isolating wall stud from upward and downward vertical displacement and lateral drift of primary structure.

2.4 FRAMING ACCESSORIES

A. Fabricate steel-framing accessories from steel sheet, ASTM A 1003/A 1003M, Structural Grade, Type H, metallic coated, of same grade and coating weight used for framing members.

B. Provide accessories of manufacturer's standard thickness and configuration, unless otherwise indicated, as follows:

1. Supplementary framing.
2. Bracing, bridging, and solid blocking.
3. Web stiffeners.
4. Anchor clips.
5. End clips.
6. Foundation clips.
7. Gusset plates.
8. Stud kickers, knee braces, and girts.
9. Joist hangers and end closures.
10. Hole reinforcing plates.
11. Backer plates.

2.5 ANCHORS, CLIPS, AND FASTENERS

A. Steel Shapes and Clips: ASTM A 36/A 36M, zinc coated by hot-dip process according to ASTM A 123/A 123M.

B. Anchor Bolts: ASTM F 1554, Grade 36, threaded carbon-steel bolts and carbon-steel nuts; and flat, hardened-steel washers; zinc coated.

C. Expansion Anchors: Fabricated from corrosion-resistant materials, with capability to sustain, without failure, a load equal to 5 times design load, as determined by testing per ASTM E 488 conducted by a qualified independent testing agency.

D. Power-Actuated Anchors: Fastener system of type suitable for application indicated, fabricated from corrosion-resistant materials, with capability to sustain, without failure, a load equal to 10 times design load, as determined by testing per ASTM E 1190 conducted by a qualified independent testing agency.

E. Mechanical Fasteners: ASTM C 1513, corrosion-resistant-coated, self-drilling, self-tapping steel drill screws.

1. Head Type: Low-profile head beneath sheathing, manufacturer's standard elsewhere.

F. Welding Electrodes: Comply with AWS standards.

2.6 MISCELLANEOUS MATERIALS

A. Galvanizing Repair Paint: ASTM A 780.

B. Cement Grout: Portland cement, ASTM C 150, Type I; and clean, natural sand, ASTM C 404. Mix at ratio of 1 part cement to 2-1/2 parts sand, by volume, with minimum water required for placement and hydration.

C. Nonmetallic, Nonshrink Grout: Premixed, nonmetallic, noncorrosive, nonstaining grout containing selected silica sands, portland cement, shrinkage-compensating agents, and plasticizing and water-reducing agents, complying with ASTM C 1107, with fluid consistency and 30-minute working time.

D. Shims: Load bearing, high-density multimonomer plastic, nonleaching.

E. Sealer Gaskets: Closed-cell neoprene foam, 1/4 inch (6.4 mm) thick, selected from manufacturer's standard widths to match width of bottom track or rim track members.

2.7 FABRICATION

A. Fabricate cold-formed metal framing and accessories plumb, square, and true to line, and with connections securely fastened, according to referenced AISI's specifications and standards, manufacturer's written instructions, and requirements in this Section.

1. Fabricate framing assemblies using jigs or templates.
2. Cut framing members by sawing or shearing; do not torch cut.
3. Fasten cold-formed metal framing members by welding, screw fastening, clinch fastening, or riveting as standard with fabricator. Wire tying of framing members is not permitted.

    a. Comply with AWS D1.3 requirements and procedures for welding, appearance and quality of welds, and methods used in correcting welding work.
    b. Locate mechanical fasteners and install according to Shop Drawings, with screw penetrating joined members by not less than three exposed screw threads.

4. Fasten other materials to cold-formed metal framing by welding, bolting, or screw fastening, according to Shop Drawings.

B. Reinforce, stiffen, and brace framing assemblies to withstand handling, delivery, and erection stresses. Lift fabricated assemblies to prevent damage or permanent distortion.

C. Fabrication Tolerances: Fabricate assemblies level, plumb, and true to line to a maximum allowable tolerance variation of 1/8 inch in 10 feet (1:960) and as follows:

1. Spacing: Space individual framing members no more than plus or minus 1/8 inch (3 mm) from plan location. Cumulative error shall not exceed minimum fastening requirements of sheathing or other finishing materials.
2. Squareness: Fabricate each cold-formed metal framing assembly to a maximum out-of-square tolerance of 1/8 inch (3 mm).

PART 3 - EXECUTION

3.1 EXAMINATION

A. Examine supporting substrates and abutting structural framing for compliance with requirements for installation tolerances and other conditions affecting performance.

1. Proceed with installation only after unsatisfactory conditions have been corrected.

3.2 PREPARATION

A. Before sprayed fire-resistive materials are applied, attach continuous angles, supplementary framing, or tracks to structural members indicated to receive sprayed fire-resistive materials.

B. After applying sprayed fire-resistive materials, remove only as much of these materials as needed to complete installation of cold-formed framing without reducing thickness of fire-resistive materials below that are required to obtain fire-resistance rating indicated. Protect remaining fire-resistive materials from damage.

C. Install load bearing shims or grout between the underside of wall bottom track or rim track and the top of foundation wall or slab at stud or joist locations to ensure a uniform bearing surface on supporting concrete or masonry construction.

D. Install sealer gaskets to isolate the underside of wall bottom track or rim track and the top of foundation wall or slab at stud or joist locations.

3.3 INSTALLATION, GENERAL

A. Cold-formed metal framing may be shop or field fabricated for installation, or it may be field assembled.

B. Install cold-formed metal framing according to AISI's "Standard for Cold-Formed Steel Framing - General Provisions" and to manufacturer's written instructions unless more stringent requirements are indicated.

C. Install shop- or field-fabricated, cold-formed framing and securely anchor to supporting structure.

1. Screw, bolt, or weld wall panels at horizontal and vertical junctures to produce flush, even, true-to-line joints with maximum variation in plane and true position between fabricated panels not exceeding 1/16 inch (1.6 mm).

D. Install cold-formed metal framing and accessories plumb, square, and true to line, and with connections securely fastened.

1. Cut framing members by sawing or shearing; do not torch cut.
2. Fasten cold-formed metal framing members by welding, screw fastening, clinch fastening, or riveting. Wire tying of framing members is not permitted.

    a. Comply with AWS D1.3 requirements and procedures for welding, appearance and quality of welds, and methods used in correcting welding work.
    b. Locate mechanical fasteners and install according to Shop Drawings, and complying with requirements for spacing, edge distances, and screw penetration.

E. Install framing members in one-piece lengths unless splice connections are indicated for track or tension members.

F. Install temporary bracing and supports to secure framing and support loads comparable in intensity to those for which structure was designed. Maintain braces and supports in place, undisturbed, until entire integrated supporting structure has been completed and permanent connections to framing are secured.

G. Do not bridge building expansion and control joints with cold-formed metal framing. Independently frame both sides of joints.

H. Install insulation, specified in Division 07 Section "Thermal Insulation," in built-up exterior framing members, such as headers, sills, boxed joists, and multiple studs at openings, that are inaccessible on completion of framing work.

I. Fasten hole reinforcing plate over web penetrations that exceed size of manufacturer's standard punched openings.

J. Erection Tolerances: Install cold-formed metal framing level, plumb, and true to line to a maximum allowable tolerance variation of 1/8 inch in 10 feet (1:960) and as follows:

    1. Space individual framing members no more than plus or minus 1/8 inch (3 mm) from plan location. Cumulative error shall not exceed minimum fastening requirements of sheathing or other finishing materials.

3.4 EXTERIOR NON-LOAD-BEARING WALL INSTALLATION

A. Install continuous tracks sized to match studs. Align tracks accurately and securely anchor to supporting structure as indicated.

B. Fasten both flanges of studs to top and bottom track, unless otherwise indicated. Space studs as follows:

    1. Stud Spacing: As Indicated by CFMF engineer with maximum 16” o/c.

C. Set studs plumb, except as needed for diagonal bracing or required for nonplumb walls or warped surfaces and similar requirements.

D. Isolate non-load-bearing steel framing from building structure to prevent transfer of vertical loads while providing lateral support.
   1. Install double deep-leg deflection tracks and anchor outer track to building structure.
   2. Connect vertical deflection clips to bypassing studs and anchor to building structure.
   3. Connect drift clips to cold formed metal framing and anchor to building structure.

E. Install horizontal bridging in wall studs, spaced in rows indicated on Shop Drawings but not more than 48 inches (1220 mm) apart. Fasten at each stud intersection.

   1. Top Bridging for Single Deflection Track: Install row of horizontal bridging within 12 inches (305 mm) of single deflection track. Install a combination of flat, taut, steel sheet straps of width and thickness indicated and stud or stud-track solid blocking of width and thickness matching studs. Fasten flat straps to stud flanges and secure solid blocking to stud webs or flanges.

      a. Install solid blocking at centers indicated.

   2. Bridging: Cold-rolled steel channel, welded or mechanically fastened to webs of punched studs.
   3. Bridging: Combination of flat, taut, steel sheet straps of width and thickness indicated and stud-track solid blocking of width and thickness to match studs. Fasten flat straps to stud flanges and secure solid blocking to stud webs or flanges.
   4. Bridging: Proprietary bridging bars installed according to manufacturer's written instructions.

F. Install miscellaneous framing and connections, including stud kickers, web stiffeners, clip angles, continuous angles, anchors, fasteners, and stud girts, to provide a complete and stable wall-framing system.

3.5 FIELD QUALITY CONTROL

A. Testing: Owner will engage a qualified independent testing and inspecting agency to perform field tests and inspections and prepare test reports.

B. Field and shop welds will be subject to testing and inspecting.

C. Testing agency will report test results promptly and in writing to Contractor and Architect.

D. Remove and replace work where test results indicate that it does not comply with specified requirements.

E. Additional testing and inspecting, at Contractor's expense, will be performed to determine compliance of replaced or additional work with specified requirements.

3.6 REPAIRS AND PROTECTION

A. Galvanizing Repairs: Prepare and repair damaged galvanized coatings on fabricated and installed cold-formed metal framing with galvanized repair paint according to ASTM A 780 and manufacturer's written instructions.

B. Provide final protection and maintain conditions, in a manner acceptable to manufacturer and Installer, that ensure that cold-formed metal framing is without damage or deterioration at time of Substantial Completion.

END OF SECTION 054000

SECTION 054400 - COLD-FORMED METAL TRUSSES

PART 1 - GENERAL

1.1 SUMMARY

A. Section Includes:

1. Cold-formed steel trusses for roofs.

1.2 PREINSTALLATION MEETINGS

A. Preinstallation Conference: Conduct conference at Project site.

1.3 ACTION SUBMITTALS

A. Product Data: For each type of product.

B. LEED Submittals:

1. Product Data for Credit MR 4: For products having recycled content, documentation indicating percentages by weight of postconsumer and preconsumer recycled content. Include statement indicating cost for each product having recycled content.

C. Shop Drawings:

1. Include layout, spacings, sizes, thicknesses, and types of cold-formed steel trusses; fabrication; and fastening and anchorage details, including mechanical fasteners.
2. Indicate reinforcing channels, opening framing, supplemental framing, strapping, bracing, bridging, splices, accessories, connection details, and attachment to adjoining work.

D. Delegated-Design Submittal: For cold-formed steel trusses.

1.4 INFORMATIONAL SUBMITTALS

A. Qualification Data: For testing agency.

B. Welding certificates.

C. Product test reports.

D. Field quality-control reports.

1.5 QUALITY ASSURANCE

A. Testing Agency Qualifications: Qualified according to ASTM E 329 for testing indicated.

B. Product Tests: Mill certificates or data from a qualified testing agency**,** or in-house testing with calibrated test equipment, indicating steel sheet complies with requirements, including base-metal thickness, yield strength, tensile strength, total elongation, chemical requirements, and metallic-coating thickness.

C. Welding Qualifications: Qualify procedures and personnel according to the following:

1. AWS D1.1/D1.1M, "Structural Welding Code - Steel."
2. AWS D1.3/D1.3M, "Structural Welding Code - Sheet Steel."

PART 2 - PRODUCTS

2.1 MANUFACTURERS

A. Manufacturers: Subject to compliance with requirements, available manufacturers offering products that may be incorporated into the Work include, but are not limited to, the following:

1. Aegis Metal Framing.
2. Genesis Worldwide Inc.
3. Marino/WARE.
4. Nuconsteel, A Nucor Company.
5. Steel Construction Systems.
6. TrusSteel; an ITW company.
7. USA Frametek.

2.2 PERFORMANCE REQUIREMENTS

A. Delegated Design: Engage a qualified professional engineer, as defined in Section 014000 "Quality Requirements," to design cold-formed steel framing.

B. Structural Performance: Provide cold-formed steel trusses capable of withstanding design loads within limits and under conditions indicated.

1. Design Loads: As indicated.
2. Deflection Limits: Design trusses to withstand design loads without deflections greater than the following:
   a. Roof Trusses: Vertical deflection of 1/360 of the span.

3. Design framing systems to provide for movement of framing members located outside the insulated building envelope without damage or overstressing, sheathing failure, connection failure, undue strain on fasteners and anchors, or other detrimental effects when subject to a maximum ambient temperature change of 120 deg F (67 deg C).

C. Cold-Formed Steel Framing Design Standards:

1. Floor and Roof Systems: Design according to AISI S210.
2. Lateral Design: Design according to AISI S213.
3. Roof Trusses: Design according to AISI S214.

D. Fire-Resistance Ratings: Comply with ASTM E 119; testing by a qualified testing agency. Identify products with appropriate markings of applicable testing agency.

2.3 COLD-FORMED STEEL TRUSS MATERIALS

A. Recycled Content of Steel Products: Postconsumer recycled content plus one-half of preconsumer recycled content not less than 25 percent.

B. Steel Sheet: ASTM A 1003/A 1003M, structural grade, Type H, metallic coated, of grade and coating weight as follows:

1. Grade: As required by structural performance.
2. Coating: G60 (Z180), A60 (ZF180), AZ50 (AZ150), or GF30 (ZGF90).

2.4 ROOF TRUSSES

A. Roof Truss Members: Manufacturer's standard C-shaped steel sections.

1. Connecting Flange Width: 1-5/8 inches (41 mm), minimum at top and bottom chords connecting to sheathing or other directly fastened construction.
2. Minimum Base-Metal Thickness: 0.0329 inch (0.84 mm) or as required for design.
3. Section Properties: As required for design

2.5 ACCESSORIES

A. Fabricate steel-framing accessories from steel sheet, ASTM A 1003/A 1003M, structural grade, Type H, metallic coated, of same grade and coating weight used for truss members.

B. Provide accessories of manufacturer's standard thickness and configuration unless otherwise indicated.

2.6 ANCHORS, CLIPS, AND FASTENERS

A. Steel Shapes and Clips: ASTM A 36/A 36M, zinc coated by hot-dip process according to ASTM A 123/A 123M.

B. Anchor Bolts: ASTM F 1554, Grade 36, threaded carbon-steel hex-headed bolts and carbon-steel nuts; and flat, hardened-steel washers; zinc coated by hot-dip process according to ASTM A 153/A 153M, Class C.

C. Expansion Anchors: Fabricated from corrosion-resistant materials, with allowable load or strength design capacities calculated according to ICC-ES AC193 and Appendix D in ACI 318, greater than or equal to the design load, as determined by testing per ASTM E 488 conducted by a qualified testing agency.

D. Power-Actuated Fasteners: Fastener system of type suitable for application indicated, fabricated from corrosion-resistant materials, with capability to sustain, without failure, allowable load capacities calculated according to ICC-ES AC70, greater than or equal to the design load, as determined by testing per ASTM E 1190 conducted by a qualified testing agency.

E. Mechanical Fasteners: ASTM C 1513, corrosion-resistant-coated, self-drilling, self-tapping steel drill screws.

1. Head Type: Low-profile head beneath sheathing; manufacturer's standard elsewhere.

F. Welding Electrodes: Comply with AWS standards.

2.7 MISCELLANEOUS MATERIALS

A. Galvanizing Repair Paint: SSPC-Paint 20 or MIL-P-21035B.

B. Shims: Load bearing, of high-density multimonomer plastic, nonleaching; or of cold-formed steel of same grade and coating as framing members supported by shims.

2.8 FABRICATION

A. Fabricate cold-formed steel trusses and accessories plumb, square, and true to line, and with connections securely fastened, according to referenced AISI's specifications and standards, manufacturer's written instructions, and requirements in this Section.

1. Fabricate trusses using jigs or templates.
2. Cut truss members by sawing or shearing; do not torch cut.
3. Fasten cold-formed steel truss members by welding, screw fastening, clinch fastening, pneumatic pin fastening, or riveting as standard with fabricator.

   a. Comply with AWS D1.3/D1.3M requirements and procedures for welding, appearance and quality of welds, and methods used in correcting welding work.

4. Fasten other materials to cold-formed steel trusses by welding, bolting, pneumatic pin fastening, or screw fastening, according to Shop Drawings.

B. Reinforce, stiffen, and brace trusses to withstand handling, delivery, and erection stresses. Lift fabricated trusses to prevent damage or permanent distortion.

C. Fabrication Tolerances: Fabricate assemblies level, plumb, and true to line to a maximum allowable tolerance variation of 1/8 inch in 10 feet (1:960) and as follows:

1. Spacing: Space individual framing members no more than plus or minus 1/8 inch (3 mm) from plan location. Cumulative error shall not exceed minimum fastening requirements of sheathing or other finishing materials.
2. Squareness: Fabricate each cold-formed metal framing assembly to a maximum out-of-square tolerance of 1/8 inch (3 mm).

PART 3 - EXECUTION

3.1 PREPARATION

A. Before sprayed fire-resistive materials are applied, attach continuous angles, supplementary framing, or tracks to structural members indicated to receive sprayed fire-resistive materials.

B. After applying sprayed fire-resistive materials, remove only as much of these materials as needed to complete installation of cold-formed steel trusses without reducing thickness of fire-resistive materials below that is required to obtain fire-resistance rating indicated. Protect remaining fire-resistive materials from damage.

3.2 INSTALLATION

A. Install, bridge, and brace cold-formed steel trusses according to AISI S200, AISI S214, AISI's "Code of Standard Practice for Cold-Formed Steel Structural Framing," and manufacturer's written instructions unless more stringent requirements are indicated.

B. Install cold-formed steel trusses and accessories plumb, square, and true to line, and with connections securely fastened.

1. Fasten cold-formed steel trusses by welding or mechanical fasteners.

a. Comply with AWS D1.3/D1.3M requirements and procedures for welding, appearance and quality of welds, and methods used in correcting welding work.
b. Locate mechanical fasteners and install according to Shop Drawings; comply with requirements for spacing, edge distances, and screw penetration.

C. Install temporary bracing and supports. Maintain braces and supports in place, undisturbed, until entire integrated supporting structure has been completed and permanent connections to framing are secured.

D. Truss Spacing: 48 inches (1220 mm) or as indicated.

E. Do not alter, cut, or remove framing members or connections of trusses.

F. Erect trusses with plane of truss webs plumb and parallel to each other, align, and accurately position at spacings indicated.

G. Erect trusses without damaging framing members or connections.

H. Coordinate with wall framing to align webs of bottom chords and load-bearing studs or continuously reinforce track to transfer loads to structure. Anchor trusses securely at all bearing points.

I. Install continuous bridging and permanently brace trusses as indicated on Shop Drawings and designed according to CFSEI's TechNote 551e, "Design Guide: Permanent Bracing of Cold-Formed Steel Trusses.".

J. Erection Tolerances: Install cold-formed steel framing level, plumb, and true to line to a maximum allowable tolerance variation of 1/8 inch in 10 feet (1:960) and as follows:

1. Space individual trusses no more than plus or minus 1/8 inch (3 mm) from plan location. Cumulative error shall not exceed minimum fastening requirements of sheathing or other finishing materials.

3.3 FIELD QUALITY CONTROL

A. Special Inspections: Owner will engage a qualified special inspector to perform inspections.

B. Testing Agency: Owner will engage a qualified testing agency to perform tests and inspections.

C. Field and shop welds will be subject to testing and inspecting.

D. Prepare test and inspection reports.

3.4 REPAIRS AND PROTECTION

A. Galvanizing Repairs: Prepare and repair damaged galvanized coatings on fabricated and installed cold-formed metal framing with galvanized repair paint according to ASTM A 780 and manufacturer's written instructions.

B. Provide final protection and maintain conditions, in a manner acceptable to manufacturer and Installer, that ensure that cold-formed metal trusses are without damage or deterioration at time of Substantial Completion.

END OF SECTION 054400

SECTION 05 5000
METAL FABRICATIONS

PART 1 GENERAL

1.01 SECTION INCLUDES

A. Shop fabricated metal items as scheduled herein.

B. Shop fabricated steel, aluminum, and metal items.

C. Prefabricated ladders and ship ladders.

1.02 RELATED REQUIREMENTS

A. Section 03 3000 - Cast-in-Place Concrete: Placement of metal fabrications in concrete.

B. Section 04 2000 - Unit Masonry: Placement of metal fabrications in masonry.

C. Section 051200: Structural steel anchor bolts and related work.

D. Section 05 5100 - Metal Stairs.

E. Section 05 5213 - Pipe and Tube Railings.

F. Section 09 9000 - Paints and Coatings

1.03 REFERENCE STANDARDS

A. AAMA 611 - Voluntary Specification for Anodized Architectural Aluminum; 2014 (2015 Errata).

B. ANSI A14.3 - American National Standard for Ladders -- Fixed -- Safety Requirements; 2008.

C. ASTM A36/A36M - Standard Specification for Carbon Structural Steel; 2014.

D. ASTM A48/A48M - Standard Specification for Gray Iron Castings; 2003 (Reapproved 2012).

E. ASTM A53/A53M - Standard Specification for Pipe, Steel, Black and Hot-Dipped, Zinc-Coated, Welded and Seamless; 2012.

F. ASTM A123/A123M - Standard Specification for Zinc (Hot-Dip Galvanized) Coatings on Iron and Steel Products; 2015.

G. ASTM A153/A153M - Standard Specification for Zinc Coating (Hot-Dip) on Iron and Steel Hardware; 2016a.

H. ASTM A283/A283M - Standard Specification for Low and Intermediate Tensile Strength Carbon Steel Plates; 2013.

I. ASTM A307 - Standard Specification for Carbon Steel Bolts, Studs, and Threaded Rod 60 000 PSI Tensile Strength; 2014.

J. ASTM A500/A500M - Standard Specification for Cold-Formed Welded and Seamless Carbon Steel Structural Tubing in Rounds and Shapes; 2013.

K. ASTM A501/A501M - Standard Specification for Hot-Formed Welded and Seamless Carbon Steel Structural Tubing; 2014.

L. ASTM A653/A653M - Standard Specification for Steel Sheet, Zinc-Coated (Galvanized) or Zinc-Iron Alloy-Coated (Galvannealed) by the Hot-Dip Process; 2015.

M. ASTM B209 - Standard Specification for Aluminum and Aluminum-Alloy Sheet and Plate; 2014.

N. ASTM B209M - Standard Specification for Aluminum and Aluminum-Alloy Sheet and Plate (Metric); 2014.

O. ASTM B210 - Standard Specification for Aluminum and Aluminum-Alloy Drawn Seamless Tubes; 2012.

P. ASTM B210M - Standard Specification for Aluminum and Aluminum-Alloy Drawn Seamless Tubes (Metric); 2012.

Q. ASTM B221 - Standard Specification for Aluminum and Aluminum-Alloy Extruded Bars, Rods, Wire, Profiles, and Tubes; 2014.

R. ASTM B221M - Standard Specification for Aluminum and Aluminum-Alloy Extruded Bars, Rods, Wire, Profiles, and Tubes (Metric); 2013.

S. ASTM F3125/F3125M - Standard Specification for High Strength Structural Bolts, Steel and Alloy Steel, Heat Treated, 120 ksi (830 MPa) and 150 ksi (1040 MPa) Minimum Tensile Strength, Inch and Metric Dimensions; 2015a.

T. AWS A2.4 - Standard Symbols for Welding, Brazing, and Nondestructive Examination; 2012.

U. AWS D1.1/D1.1M - Structural Welding Code - Steel; 2015 (Errata 2016).

V. AWS D1.2/D1.2M - Structural Welding Code - Aluminum; 2008.

W. SSPC-Paint 15 - Steel Joist Shop Primer/Metal Building Primer; 1999 (Ed. 2004).

X. SSPC-Paint 20 - Zinc-Rich Primers (Type I, "Inorganic," and Type II, "Organic"); 2002 (Ed. 2004).

Y. SSPC-SP 2 - Hand Tool Cleaning; 1982 (Ed. 2004).

1.04 SUBMITTALS

A. See Section 01 3000 - Administrative Requirements, for submittal procedures.

B. Shop Drawings: Indicate profiles, sizes, connection attachments, reinforcing, anchorage, size and type of fasteners, and accessories. Include erection drawings, elevations, and details where applicable.

1. Indicate welded connections using standard AWS A2.4 welding symbols. Indicate net weld lengths.

C. Welders' Certificates: Submit certification for welders employed on the project, verifying AWS qualification within the previous 12 months.

1.05 QUALITY ASSURANCE

A. Design fabricated items under direct supervision of a Professional Structural Engineer experienced in design of this Work and licensed in the State of Delaware.

PART 2 PRODUCTS

2.01 MATERIALS - STEEL

A. Steel Sections: ASTM A36/A36M.

B. Steel Tubing: ASTM A500, Grade B cold-formed, or ASTM A 501 hot-formed, structural tubing.

C. Plates: ASTM A283/A283M.

D. Pipe: ASTM A53/A53M, Grade B Schedule 40, black and hot-dip galvanized finish, as indicated.

E. Bolts, Nuts, and Washers: ASTM F3125/F3125M, Type 1, plain.

F. Welding Materials: AWS D1.1/D1.1M; type required for materials being welded.

G. Shop and Touch-Up Primer: SSPC-Paint 15, complying with VOC limitations of authorities having jurisdiction.

H. Touch-Up Primer for Galvanized Surfaces: SSPC-Paint 20, Type I - Inorganic, complying with VOC limitations of authorities having jurisdiction.

2.02 MATERIALS - ALUMINUM

A. Extruded Aluminum: ASTM B221 (ASTM B221M), 6063 alloy, T6 temper.

B. Sheet Aluminum: ASTM B209 (ASTM B209M), 5052 alloy, H32 or H22 temper.

C. Aluminum-Alloy Drawn Seamless Tubes: ASTM B210 (ASTM B210M), 6063 alloy, T6 temper.

D. Bolts, Nuts, and Washers: Stainless steel.

E. Welding Materials: AWS D1.2/D1.2M; type required for materials being welded.

2.03 FABRICATION

A. Fit and shop assemble items in largest practical sections, for delivery to site.

B. Fabricate items with joints tightly fitted and secured.

C. Continuously seal joined members by continuous welds.

D. Grind exposed joints flush and smooth with adjacent finish surface. Make exposed joints butt tight, flush, and hairline. Ease exposed edges to small uniform radius.

E. Exposed Mechanical Fastenings: Flush countersunk screws or bolts; unobtrusively located; consistent with design of component, except where specifically noted otherwise.

F. Supply components required for anchorage of fabrications. Fabricate anchors and related components of same material and finish as fabrication, except where specifically noted otherwise.

2.04 FABRICATED ITEMS

A. Supply and install metal fabrications listed below complete with anchorage and attachments necessary for installation.

B. Steel lintels:
   1. Provide hot dip galvanized loose steel lintels in masonry. Lintels shall be provided for all exterior masonry veneer openings and as shown on the drawings. Bear lintels 8" on masonry at each jamb.
   2. Refer to structural drawings for sizes.

C. Angle support for vanity:
   1. Provide welded steel angle supports for vanities.
   2. Secure to walls by bolting or screwing into blocking in walls.
   3. Prepare for attachment of wood blocking and plastic laminate as specified elsewhere and shown on the drawings.

D. Elevator shaft hoist beam: Size per structural drawings.

E. Elevator sill angles:
   1. Provide 5" x 5" x 5/16" sill angles at each elevator entrance.
   2. Secure to floor structure and fill with grout as directed on the elevator shop drawings

F. Elevator pit ladder: Provide elevator pit ladder where shown on the drawings.
   1. Ladder shall extend a min. of 4'-0" above finished floor.

2. Provide 2-1/2" x 1/2" continuous structural steel flat bar side rails with eased edges, spaced 1'-6" apart.
3. Rungs shall be 1" square solid rungs with non-slip surface on top of each rung.
   a. Coat rung with aluminum oxide granules set in epoxy resin or use a type of manufactured rung which is filled with aluminum oxide grout.
   b. Fit rungs in centerline of side rails, plug weld and grind smooth on outer face of rail.
4. Support ladder at top and bottom.
   a. Use brackets designed for adequate support and anchorage; weld to rails.
   b. Hold ladder min. 7" clear of wall to centerline of rungs.

G. Metal Roof Ladders:
1. Manufacturer: O'Keeffe's, Inc.; 325 Newhall St. San Francisco, CA 94124. ASD. (888) 653-3333. http://www.okeeffes.com.
   a. Substitutions: See Section 016000
2. Exterior Fixed Roof Ladders: Tubular Rail Low Parapet Access Ladder with Platform and Return.
   a. Model 503 as manufactured by O'Keeffe's Inc.
   b. Walk-Through Rail and Roof Rail Extension: Not less than 3 feet 6 inches (1067 mm) above the landing and shall be fitted with deeply serrated, square, tubular grab rails.
   c. Landing Platform: 1-1/2 inches (38 mm) or greater diameter, tubular aluminum guardrails and decks of serrated aluminum treads.
3. Interior Fixed Roof Ladders: Heavy Duty Tubular Rail Access Ladder.
   a. Model 501 as manufactured by O'Keeffe's Inc.
4. Ladder Materials
   a. Aluminum Sheet: Alloy 5005-H34 to comply with ASTM B209.
   b. Aluminum Extrusions: Alloy 6063-T6 to comply with ASTM B221.
5. Ladder finish: Clear Anodic Finish: AA-M10C22A41 Mechanical finish as fabricated. Architectural Class I, clear coating 0.018 mm or thicker.
6. Rungs: Not less than 1-1/4 inches (32 mm) in section and 18-3/8 inches (467mm) long, formed from tubular aluminum extrusions. Squared and deeply serrated on all sides.
   a. Rungs shall withstand a 1,500 pound (454 kg) load without deformation or failure.
7. Provide ladder cage for ladder runs 20 feet or greater.
8. Provide intermediate brackets in order to keep maximum bracket spacing at 10 feet on center. For exterior roof ladders, provide mounting bracket to wall to keep ladder rails above roof.
9. Heavy Duty Tubular Side Rails: Assembled from two interlocking aluminum extrusions no less than 1/8 inch (3 mm) wall thickness by 3 inches (76 mm) wide. Construction shall be self-locking stainless steel fasteners, full penetration TIG welds and clean, smooth and burr-free surfaces.

H. Steel Ship's Ladder (Stage Loading Gallery)
1. Fabricate stairs, landings and component connections to support live loads of min. 100 lb./sq. ft. with deflection of stairs and landings not exceeding 1/360 of span.
2. Fabricate integral railings and component connections capable of resisting a lateral force of min. 200 lb. at any single point, without permanent damage or set.
3. Accurately form and fit components and connections.
4. Grind exposed edges and welds smooth and flush.
5. Provide necessary anchors, hangers and struts.
6. Provide nosings as indicated.

7. Shop prime in two coats.
8. Do not prime surface to be field welded or cast in concrete.
9. Exception: grating at landings and treads to be galvanized.
10. Edges of landings and tread to have abrasive nosings and top surface of all grating to be non-slip.

I. Dunnage, railingss and working platforms for chillers: Provide, as shown on the drawings, galvanized steel support rails, working platform and railings for rooftop chillers.

J. Steel edge angle at overhead coiling doors: size and configuration as shown; hot-dipped galvanized.

K. Steel channel frame at overhead coiling doors: size and configuration as shown; hot-dipped galvanized.

2.05 MANUFACTURED PRODUCTS

A. Supply and install metal fabrications listed below complete with anchorage and attachments necessary for installation.

B. Ornamental bollards at walkway areas: removable.

C. Bollards: Steel pipe, concrete filled, crowned cap, as detailed; galvanized finish.
1. 6" G-90 galvanized standard weight steel pipe.
2. Fill with 3,000 psi concrete.
3. Slightly overfill top for drainage.
4. Bollard Cover:
a. High Density Polyethylene (HDPE) post cover
b. Color: Yellow
c. Product Model No.: CL1686FF
d. Manufacturer: Post Guard, distributed by Global Insdutrial.

D. Ledge Angles, Shelf Angles, Channels, and Plates Not Attached to Structural Framing: For support of masonry; galvanized finish.

2.06 DOWNSPOUT BOOTS

A. Downspout Boots: Smooth interior without boxed corners or choke points; include integral lug slots, integral cleanout, cleanout cover, and tamper proof fasteners.
1. Configuration: Offset.
2. Material: Cast iron; ASTM A48/A48M; casting thickness 3/8 inch (9.5 mm), minimum.
3. Finish: Manufacturer's standard factory applied powder coat finish.
4. Color: To be selected by Architect from manufacturer's standard range.
5. Accessories: Manufacturer's standard stainless steel fasteners, stainless steel building wall anchors, integral neoprene gaskets, and rubber coupling.
6. Manufacturers:
a. Downspoutboots.com, a division of J. R. Hoe & Sons; O Series: www.downspoutboots.com.
b. Neenah Foundry, a division of Neenah Enterprises, Inc; Model R-4929-O6C: www.nfco.com.

2.07 FINISHES - STEEL

A. Prime paint steel items.
1. Exceptions: Galvanize items to be embedded in concrete or masonry.
2. Exceptions: Do not prime surfaces in direct contact with concrete, where field welding is required, and items to be covered with sprayed fireproofing.

B. Prepare surfaces to be primed in accordance with SSPC-SP2.

C. Clean surfaces of rust, scale, grease, and foreign matter prior to finishing.

D. Prime Painting: One coat.

E. Galvanizing of Structural Steel Members: Galvanize after fabrication to ASTM A123/A123M requirements. Provide minimum 1.7 oz/sq ft galvanized coating.

F. Galvanizing of Non-structural Items: Galvanize after fabrication to ASTM A123/A123M requirements.

2.08 FINISHES - ALUMINUM

A. Exterior Aluminum Surfaces: Class I natural anodized.

B. Interior Aluminum Surfaces: Class I natural anodized.

C. Class I Natural Anodized Finish: AAMA 611 AA-M12C22A41 Clear anodic coating not less than 0.7 mils thick.

D. Apply one coat of bituminous paint to concealed aluminum surfaces in contact with cementitious or dissimilar materials.

2.09 FABRICATION TOLERANCES

A. Squareness: 1/8 inch maximum difference in diagonal measurements.

B. Maximum Offset Between Faces: 1/16 inch.

C. Maximum Misalignment of Adjacent Members: 1/16 inch.

D. Maximum Bow: 1/8 inch in 48 inches.

E. Maximum Deviation From Plane: 1/16 inch in 48 inches.

PART 3 EXECUTION

3.01 EXAMINATION

A. Verify that field conditions are acceptable and are ready to receive work.

3.02 PREPARATION

A. Clean and strip primed steel items to bare metal where site welding is required.

B. Supply setting templates to the appropriate entities for steel items required to be cast into concrete or embedded in masonry.

3.03 INSTALLATION

A. Install items plumb and level, accurately fitted, free from distortion or defects.

B. Provide for erection loads, and for sufficient temporary bracing to maintain true alignment until completion of erection and installation of permanent attachments.

C. Field weld components indicated on drawings and/or on shop drawings.

D. Perform field welding in accordance with AWS D1.1/D1.1M.

E. Obtain approval prior to site cutting or making adjustments not scheduled.

F. After erection, prime welds, abrasions, and surfaces not shop primed or galvanized, except surfaces to be in contact with concrete.

3.04 TOLERANCES

A. Maximum Variation From Plumb: 1/4 inch per story, non-cumulative.

B. Maximum Offset From True Alignment: 1/4 inch.

C. Maximum Out-of-Position: 1/4 inch.

END OF SECTION

SECTION 05 5100
METAL STAIRS

PART 1 GENERAL

1.01 SECTION INCLUDES

A. Interior ornamental stairs.

B. Interior exit stairs.

C. Stairs with metal treads.

D. Structural steel stair framing and supports.

E. Handrails and guards.

1.02 RELATED REQUIREMENTS

A. Section 03 3000 - Cast-in-Place Concrete: Concrete fill in stair pans; mesh reinforcement for landings.

B. Section 04 2000 - Unit Masonry: Placement of metal fabrications in masonry.

C. Section 05 5000 - Metal Fabrications.

D. Section 05 5305 - Gratings and Floor Plates: Floor Plates at catwalks

E. Section 05 5213 - Pipe and Tube Railings: Metal handrails and balusters other than specified in this section.

F. Section 096600 - Terrazzo treads.

G. Section 09 9000 - Paints and Coatings

H. Division 26 - LED Lighting integral to handrails.

1.03 REFERENCE STANDARDS

A. AISC 201 - AISC Certification Program for Structural Steel Fabricators, Standard for Steel Building Structures; 2006.

B. ASTM A6/A6M - Standard Specification for General Requirements for Rolled Structural Steel Bars, Plates, Shapes, and Sheet Piling; 2016.

C. ASTM A36/A36M - Standard Specification for Carbon Structural Steel; 2014.

D. ASTM A53/A53M - Standard Specification for Pipe, Steel, Black and Hot-Dipped, Zinc-Coated, Welded and Seamless; 2012.

E. ASTM A153/A153M - Standard Specification for Zinc Coating (Hot-Dip) on Iron and Steel Hardware; 2016a.

F. ASTM A283/A283M - Standard Specification for Low and Intermediate Tensile Strength Carbon Steel Plates; 2013.

G. ASTM A500/A500M - Standard Specification for Cold-Formed Welded and Seamless Carbon Steel Structural Tubing in Rounds and Shapes; 2013.

H. ASTM A501/A501M - Standard Specification for Hot-Formed Welded and Seamless Carbon Steel Structural Tubing; 2014.

I. ASTM A786/A786M - Standard Specification for Hot-Rolled Carbon, Low-Alloy, High-Strength Low-Alloy, and Alloy Steel Floor Plates; 2015.

J. ASTM E935 - Standard Test Methods for Performance of Permanent Metal Railing Systems and Rails for Buildings; 2013.

K. ASTM E985 - Standard Specification for Permanent Metal Railing Systems and Rails for Buildings; 2000 (Reapproved 2006).

L. ASTM F3125/F3125M - Standard Specification for High Strength Structural Bolts, Steel and Alloy Steel, Heat Treated, 120 ksi (830 MPa) and 150 ksi (1040 MPa) Minimum Tensile Strength, Inch and Metric Dimensions; 2015a.

M. ATBCB ADAAG - Americans with Disabilities Act Accessibility Guidelines; 2002.

N. AWS A2.4 - Standard Symbols for Welding, Brazing, and Nondestructive Examination; 2012.

O. AWS D1.1/D1.1M - Structural Welding Code - Steel; 2015 (Errata 2016).

P. NAAMM AMP 510 - Metal Stairs Manual; 1992, Fifth Edition.

Q. SSPC-Paint 15 - Steel Joist Shop Primer/Metal Building Primer; 1999 (Ed. 2004).

R. SSPC-SP 2 - Hand Tool Cleaning; 1982 (Ed. 2004).

1.04 SUBMITTALS

A. Shop Drawings: Indicate profiles, sizes, connection attachments, reinforcing, anchorage, size and type of fasteners, and accessories.
   1. Indicate welded connections using standard AWS A2.4 welding symbols. Indicate net weld lengths.
   2. Include the design engineer's stamp or seal on each sheet of shop drawings.

B. Delegated Design Data: As required by authorities having jurisdiction.

C. Welders' Certificates.

D. Fabricator's Qualification Statement: Provide documentation showing steel fabricator is certified under AISC 201.

1.05 QUALITY ASSURANCE

A. Structural Designer Qualifications: Professional Structural Engineer experienced in design of this work and licensed in the State of Delaware, or personnel under direct supervision of such an engineer.

B. Drawing review: Structural Engineer of Record will review shop drawings for conformance with the contract documents and the loads specified. Corrections to the shop drawings required by Engineer's review shall not constitute a change in contract amount for pricing and detailing.

C. Welder Qualifications: Show certification of welders employed on the Work, verifying AWS qualification within the previous 12 months.

D. Fabricator Qualifications:
   1. A qualified steel fabricator that is certified by the American Institute for Steel Construction (AISC) under AISC 201.

E. A company specializing in manufacturing products specified in this section, with not less than ten years of documented experience.

PART 2 PRODUCTS

2.01 METAL STAIRS - GENERAL

A. Metal Stairs: Provide stairs of the design specified, complete with landing platforms, vertical and horizontal supports, railings, and guards, fabricated accurately for anchorage to each other and to building structure.
   1. Regulatory Requirements: Provide stairs and railings complying with the most stringent requirements of local, state, and federal regulations; where requirements of the contract documents exceed those of regulations, comply with the contract documents.

2. Handrails: Comply with applicable accessibility requirements of ADA Standards.
3. Structural Design: Provide complete stair and railing assemblies complying with the applicable local code.
   a. Refer to structural drawings for stair construction notes and design loads.
4. Dimensions: As indicated on drawings.
5. Shop assemble components; disassemble into largest practical sections suitable for transport and access to site.
6. No sharp or rough areas on exposed travel surfaces and surfaces accessible to touch.
7. Separate dissimilar metals using paint or permanent tape.

B. Metal Jointing and Finish Quality Levels:
   1. Architectural (Stairs A and F): All joints as inconspicuous as possible, whether welded or mechanical.
      a. Welded Joints: Continuously welded and ground smooth and flush.
      b. Mechanical Joints: Butted tight, flush, and hairline; concealed fastenings only.
      c. Exposed Edges and Corners: Eased to small uniform radius.
      d. Metal Surfaces to be Painted: Sanded or ground smooth, suitable for highest quality gloss finish.
   2. Commercial (typical unless otherwise noted): Exposed joints as inconspicuous as possible, whether welded or mechanical; underside of stair is covered by soffit IS NOT considered exposed to view.
      a. Welded Joints: Intermittently welded on back side, filled with body putty, and sanded smooth and flush.
      b. Welds Exposed to View: Ground smooth and flush.
      c. Mechanical Joints: Butted tight, flush, and hairline.
      d. Bolts Exposed to View: Countersunk flat or oval head bolts; no exposed nuts.
      e. Exposed Edges and Corners: Eased to small uniform radius.
      f. Metal Surfaces to be Painted: Sanded or ground smooth, suitable for satin or matte finish.
   3. Service (access stairs to penthouse mechanical areas, stage area catwalks): Exposed joints tight with face surfaces aligned; underside of stair not covered by soffit is not considered exposed to view.
      a. Welded Joints: Welded on back side wherever possible.
      b. Welds Exposed to View: Ground smooth; not required to be flush.
      c. Bolts Exposed to View: Countersunk flat or oval head bolts; no exposed nuts or screw threads.
      d. Metal Surfaces to be Painted: Sanded smooth, suitable for satin or matte finish.

C. Fasteners: Same material or compatible with materials being fastened; type consistent with design and specified quality level.

D. Anchors and Related Components: Same material and finish as item to be anchored, except where specifically indicated otherwise; provide all anchors and fasteners required.

2.02 METAL STAIRS WITH PRECAST TERRAZZO TREADS AND LANDINGS (STAIRS A & F)

A. Jointing and Finish Quality Level: Architectural, as defined above.

B. Risers: Closed.

C. Treads: Metal pan with precast terrazzo tread.
   1. Precast Concrete Terrazzo Tread Thickness: 2 inches, minimum. See Section 096616.
   2. Tread Pan Material: Steel sheet.

3. Tread Pan Thickness: As required by design; 14 gage, 0.075 inch minimum.
4. Pan Anchorage to Stringers: Continuously welded, from top or bottom.

D. Risers: Same material and thickness as tread pans.
1. Riser/Nosing Profile: As shown on drawings.

E. Stringers: Steel plate.
1. Stringer Depth: As indicated on drawings.

F. Landings: Same construction as treads, supported and reinforced as required to achieve design load capacity, with precast terrazzo landings.

G. Railings: Steel mesh railings.

H. Guards - As shown on drawings.

I. Finish: Shop- or factory-prime painted.

J. Under Side of Stair: Not exposed to view.

2.03 EXIT STAIRS (TYPICAL, U.O.N)

A. Jointing and Finish Quality Level: Commercial.

B. Risers: Closed.

C. Treads: Metal pan with concrete fill..
1. Concrete Depth: 2 inches.
2. Tread Pan Material: Steel sheet.
3. Tread Pan Thickness: As required by design; 14 gage, 0.075 inch minimum.
4. Pan Anchorage to Stringers: Continuously welded, from top or bottom.
5. Concrete Reinforcement: None.
6. Concrete Finish: For resilient floor covering.

D. Risers: Same material and thickness as tread pans.
1. Riser/Nosing Profile: Vertical riser with underside of nosing sloped up from bottom of tread pan at not less than 60 degrees from horizontal, with rounded top of nosing of minimum radius.
2. Nosing Depth: Not more than 1 inch overhang.
3. Nosing Return: Flush with top of concrete fill, not more than 1/2 inch wide.

E. Stringers: Rolled steel channels.
1. Stringer Depth: 12 inches.
2. End Closure: Sheet steel of same thickness as risers welded across ends.

F. Landings: Similar construction, using corrugated steel decking for concrete fill, supported and reinforced as required to achieve design load capacity.

G. Railings: As shown on drawings and specified below.

H. Guards - As shown on drawings and specified below.

I. Finish: Shop- or factory-prime painted.

J. Under Side of Stair: Not exposed to view.

2.04 METAL SERVICE STAIRS WITH METAL TREADS

A. Jointing and Finish Quality Level: Service, as defined above.

B. Risers: Closed.

C. Treads: Checkered steel plate.
1. Tread Thickness: 1/4 inch, minimum.

2. Anchorage to Stringers: Welded or bolted to carrier angles welded or bolted to stringers.

D. Risers: Steel sheet.
1. Riser Thickness: As required by design; 14 gage, 0.075 inch minimum.
2. Riser/Nosing Profile: Sloped riser with rounded nosing of minimum radius.

E. Stringers: Rolled steel channels.
1. Stringer Depth: 10 inches.
2. End Closure: Sheet steel of same thickness as risers welded across ends.

F. Landings: Same construction as treads, supported and reinforced as required to achieve design load capacity.

G. Railings: Steel pipe railings.

H. Finish: Shop- or factory-prime painted.

2.05 ORNAMENTAL STAIRS HANDRAILS AND GUARDS

A. Wall-Mounted Rails: Decorative stainless steel, Type 304, satin finish.

B. Guards:
1. Top Rails, Posts and Handrails: Decorative stainless steel, Type 304, satin finish.
2. Metal Rail Infill:
a. Banker Wire; l-62: www.bankerwire.com
1) Weave size: 1.81” square openings, lock crimp, 0.38" overall thickness.
2) Alloy: Stainless steel, Type 304.
3) Percentage of open area: 81.7
b. The Western Group; Woven Wire: www.architecturalwire.com.
1) Style: Himalayan Foothills III
2) Weave size: 2” square openings, 3 Gauge (.244”)
3) Alloy: Stainless steel, Type 304.
4) Percentage of open area: 79.4
c. McNICHOLS Quality Square Weave Wire Mesh.
1) Item: 3893920041
2) Weave Size: 2" Square Opening, 0.250" Wire Diameter, Lockcrimp Weave
3) Alloy: Stainless Steel Type 304
4) Percentage of open area: 79
3. Panel Clips: C. R. Laurence; CRL Z Series, rounded, brushed stainless steel.

2.06 EXIT STAIRS HANDRAILS AND GUARDS

A. Wall and Post-Mounted Handrails: Stainless Steel, Round pipe unless otherwise indicated.
1. Outside Diameter: 1-1/4 inch, minimum, to 1-1/2 inches, maximum.

B. Guards:
1. Top Rails: Stainless steel, round pipe unless otherwise indicated.
a. Outside Diameter: 1-1/2 inch, minimum, to 2 inches, maximum.
2. Infill at Picket Railings: Vertical pickets.
a. Horizontal Spacing: Maximum 4 inches on center.
b. Material: Solid steel bar.
c. Shape: Square.
d. Size: 1/2 inch square.
e. Top Mounting: Welded to steel channel at underside of top rail.
f. Bottom Mounting: Welded to 1-1/2" square bottom rail.
3. End and Intermediate Posts: Square tube.

a. Horizontal Spacing: As required to meet design loads.
b. Mounting: Welded to top surface of stringer.

2.07 MATERIALS

A. Steel Sections: ASTM A 36/A 36M.

B. Steel Tubing: ASTM A500/A500M or ASTM A501/A501M structural tubing, round and shapes as indicated.

C. Steel Plates: ASTM A6/A6M or ASTM A283/A283M.

D. Pipe: ASTM A 53/A 53M, Grade B Schedule 40, black finish.

E. Ungalvanized Steel Sheet: Hot- or cold-rolled, except use cold-rolled where finished work will be exposed to view.
1. Hot-Rolled Steel Sheet: ASTM A 1011/A 1011M, Designation CS (commercial steel); SS (Structural), Grade 33.
2. Cold-Rolled Steel Sheet: ASTM A 1008/A 1008M, Designation CS (commercial steel); SS (Structural), Grade 33, Type1.

F. Checkered Plate: ASTM A786/A786M, rolled steel floor plate; manufacturer's standard pattern.

G. Concrete Fill: Type specified in Section 03 3000.

2.08 ACCESSORIES

A. Steel Bolts, Nuts, and Washers: ASTM F3125/F3125M, Type 1, and galvanized to ASTM A153/A153M where connecting galvanized components.

B. Steel Bolts, Nuts, and Washers: ASTM A 325 (ASTM A 325M), Type 1.

C. Welding Materials: AWS D1.1/D1.1M; type required for materials being welded.

D. Shop and Touch-Up Primer: SSPC-Paint 15, complying with VOC limitations of authorities having jurisdiction.

2.09 SHOP FINISHING

A. Clean surfaces of rust, scale, grease, and foreign matter prior to finishing.

B. Do not prime surfaces in direct contact with concrete or where field welding is required.

C. Prime Painting: Use specified shop- and touch-up primer.
1. Preparation of Steel: In accordance with SSPC-SP 2, Hand Tool Cleaning.
2. Number of Coats: Two.

PART 3 EXECUTION

3.01 EXAMINATION

A. Verify that field conditions are acceptable and are ready to receive work.

3.02 PREPARATION

A. When field welding is required, clean and strip primed steel items to bare metal.

B. Supply items required to be embedded in masonry with setting templates.

3.03 INSTALLATION

A. Install components plumb and level, accurately fitted, free from distortion or defects.

B. Provide anchors, plates, angles, hangers, and struts required for connecting stairs to structure.

C. Allow for erection loads, and for sufficient temporary bracing to maintain true alignment until completion of erection and installation of permanent attachments.

D. Provide welded field joints where specifically indicated on drawings. Perform field welding in accordance with AWS D1.1/D1.1M.

E. Other field joints may be either welded or bolted provided the result complies with the limitations specified for jointing quality levels.

F. Obtain approval prior to site cutting or creating adjustments not scheduled.

G. After erection, prime welds, abrasions, and surfaces not shop primed, except surfaces to be in contact with concrete.

3.04 TOLERANCES

A. Maximum Variation From Plumb: 1/4 inch per story, non-cumulative.

B. Maximum Offset From True Alignment: 1/4 inch.

END OF SECTION

SECTION 05 5213
PIPE AND TUBE RAILINGS

PART 1 GENERAL

1.01 SECTION INCLUDES

A. Wall mounted handrails.

B. Free-standing railings at steps.

1.02 RELATED REQUIREMENTS

A. Section 05 5100 - Metal Stairs: Handrails other than those specified in this section.

B. Section 09 2116 - Gypsum Board Assemblies: Placement of backing plates in stud wall construction.

C. Section 09 9000 - Paints and Coatings

D. Division 26: LED Lighting integral to handrails.

1.03 REFERENCE STANDARDS

A. ADA Standards - Americans with Disabilities Act (ADA) Standards for Accessible Design; 2010.

B. ASTM A53/A53M - Standard Specification for Pipe, Steel, Black and Hot-Dipped, Zinc-Coated, Welded and Seamless; 2012.

C. ASTM A500/A500M - Standard Specification for Cold-Formed Welded and Seamless Carbon Steel Structural Tubing in Rounds and Shapes; 2013.

D. ASTM E935 - Standard Test Methods for Performance of Permanent Metal Railing Systems and Rails for Buildings; 2013.

E. ASTM E985 - Standard Specification for Permanent Metal Railing Systems and Rails for Buildings; 2000 (Reapproved 2006).

F. SSPC-Paint 15 - Steel Joist Shop Primer/Metal Building Primer; 1999 (Ed. 2004).

1.04 SUBMITTALS

A. See Section 01 3000 - Administrative Requirements, for submittal procedures.

B. Shop Drawings: Indicate profiles, sizes, connection attachments, anchorage, size and type of fasteners, and accessories.

C. Samples: Submit two, 12 inch long samples of handrail. Submit two samples of elbow, wall bracket, and end stop.

PART 2 PRODUCTS

2.01 RAILINGS - GENERAL REQUIREMENTS

A. Design, fabricate, and test railing assemblies in accordance with the most stringent requirements of ASTM E985 and applicable local code.

B. Distributed Loads: Design railing assembly, wall rails, and attachments to resist distributed force of 75 pounds per linear foot applied to the top of the assembly and in any direction, without damage or permanent set.

C. Concentrated Loads: Design railing assembly, wall rails, and attachments to resist a concentrated force of 200 pounds applied at any point on the top of the assembly and in any direction, without damage or permanent set.

D. Allow for expansion and contraction of members and building movement without damage to connections or members.

E. Dimensions: See drawings for configurations and heights.

F. Provide anchors and other components as required to attach to structure, made of same materials as railing components unless otherwise indicated; where exposed fasteners are unavoidable provide flush countersunk fasteners.

G. Provide welding fittings to join lengths, seal open ends, and conceal exposed mounting bolts and nuts, including but not limited to elbows, T-shapes, splice connectors, flanges, escutcheons, and wall brackets.

2.02 ORNAMENTAL HANDRAILS AND GUARDS

A. Wall-Mounted Rails: Decorative stainless steel, Type 304, satin finish.

B. Guards:
1. Top Rails, Posts and Handrails: Decorative stainless steel, Type 304, satin finish.
2. Metal Rail Infill:
a. Banker Wire; l-62: www.bankerwire.com
1) Weave size: 1.81” square openings, lock crimp, 0.38" overall thickness.
2) Alloy: Stainless steel, Type 304.
3) Percentage of open area: 81.7
b. The Western Group; Woven Wire: www.architecturalwire.com.
1) Style: Himalayan Foothills III
2) Weave size: 2” square openings, 3 Gauge (.244”)
3) Alloy: Stainless steel, Type 304.
4) Percentage of open area: 79.4
c. McNICHOLS Quality Square Weave Wire Mesh.
1) Item: 3893920041
2) Weave Size: 2" Square Opening, 0.250" Wire Diameter, Lockcrimp Weave
3) Alloy: Stainless Steel Type 304
4) Percentage of open area: 79
3. Panel Clips: C. R. Laurence; CRL Z Series, rounded, brushed stainless steel.

C. Locations:
1. Theater (public areas)
2. Performing Arts Center Lobby

2.03 STEEL RAILING SYSTEM (TYPICAL, U.O.N.)

A. Exterior railings and guards:
1. Stainless steel.

B. Interior railings and guards:
1. Painted steel, with stainless steel handrails and top guard.
2. Wall and Post-Mounted Handrails: Stainless Steel, Round pipe unless otherwise indicated.
a. Outside Diameter: 1-1/4 inch, minimum, to 1-1/2 inches, maximum.
3. Guards:
a. Top Rails: Stainless steel, round pipe unless otherwise indicated.
1) Outside Diameter: 1-1/2 inch, minimum, to 2 inches, maximum.
b. Infill at Picket Railings: Vertical pickets.
1) Horizontal Spacing: Maximum 4 inches on center.

2) Material: Solid steel bar.
3) Shape: Square.
4) Size: 1/2 inch square.
5) Top Mounting: Welded to steel channel at underside of top rail.
6) Bottom Mounting: Welded to 1-1/2" square bottom rail.

c. End and Intermediate Posts: Square tube.
1) Horizontal Spacing: As required to meet design loads.
2) Mounting: Welded to top surface of stringer.

C. Steel Tube: ASTM A500/A500M, Grade B cold-formed structural tubing.

D. Steel Pipe: ASTM A53/A53M, Grade B Schedule 80, black finish.

E. Welding Fittings: Factory- or shop-welded from matching pipe or tube; seams continuously welded; joints and seams ground smooth.

F. Exposed Fasteners: No exposed bolts or screws.

G. Straight Splice Connectors: Steel concealed spigots.

H. Shop and Touch-Up Primer: SSPC-Paint 15, complying with VOC limitations of authorities having jurisdiction.

2.04 FABRICATION

A. Accurately form components to suit specific project conditions and for proper connection to building structure.

B. Fit and shop assemble components in largest practical sizes for delivery to site.

C. Fabricate components with joints tightly fitted and secured. Provide spigots and sleeves to accommodate site assembly and installation.

D. Welded Joints:
1. Exterior Components: Continuously seal joined pieces by continuous welds. Drill condensate drainage holes at bottom of members at locations that will not encourage water intrusion.
2. Interior Components: Continuously seal joined pieces by continuous welds.
3. Grind exposed joints flush and smooth with adjacent finish surface. Make exposed joints butt tight, flush, and hairline. Ease exposed edges to small uniform radius.

PART 3 EXECUTION

3.01 EXAMINATION

A. Verify that field conditions are acceptable and are ready to receive work.

3.02 PREPARATION

A. Clean and strip primed steel items to bare metal where site welding is required.

B. Supply items required to be cast into concrete or embedded in masonry with setting templates, for installation as work of other sections.

3.03 INSTALLATION

A. Install in accordance with manufacturer's instructions.

B. Install components plumb and level, accurately fitted, free from distortion or defects, with tight joints.

C. Install railings in compliance with ADA Standards for accessible design at applicable locations.

D. Anchor railings securely to structure.

E. Field weld anchors as indicated on shop drawings. Touch-up welds with primer. Grind welds smooth.

F. Conceal anchor bolts and screws whenever possible. Where not concealed, use flush countersunk fastenings.

3.04 TOLERANCES

A. Maximum Variation From Plumb: 1/4 inch per floor level, non-cumulative.

B. Maximum Offset From True Alignment: 1/4 inch.

C. Maximum Out-of-Position: 1/4 inch.

END OF SECTION

SECTION 05 5305
GRATINGS AND FLOOR PLATES

PART 1 GENERAL

1.01 SECTION INCLUDES

A. Flat surface floor, stair tread, and catwalk plating.

B. Perimeter closure.

1.02 RELATED REQUIREMENTS

A. Section 05 5000 - Metal Fabrications. Catwalk structural framing.

1.03 REFERENCE STANDARDS

A. ASTM A36/A36M - Standard Specification for Carbon Structural Steel; 2014.

B. ASTM A786/A786M - Standard Specification for Hot-Rolled Carbon, Low-Alloy, High-Strength Low-Alloy, and Alloy Steel Floor Plates; 2015.

C. ASTM B211 - Standard Specification for Aluminum and Aluminum-Alloy Rolled or Cold Finished Bar, Rod, and Wire; 2012.

D. ASTM B211M - Standard Specification for Aluminum and Aluminum-Alloy Rolled or Cold-Finished Bar, Rod, and Wire (Metric); 2012.

E. AWS A2.4 - Standard Symbols for Welding, Brazing, and Nondestructive Examination; 2012.

F. AWS D1.1/D1.1M - Structural Welding Code - Steel; 2015 (Errata 2016).

G. SSPC-Paint 15 - Steel Joist Shop Primer/Metal Building Primer; 1999 (Ed. 2004).

H. SSPC-SP 2 - Hand Tool Cleaning; 1982 (Ed. 2004).

1.04 SUBMITTALS

A. See Section 01 3000 - Administrative Requirements, for submittal procedures.

B. Product Data: Provide span and deflection tables.

C. Shop Drawings: Indicate details of component supports, openings, perimeter construction details, and tolerances.

1. Indicate welded connections using standard AWS A2.4 welding symbols. Indicate net weld lengths.

D. Welders' Certificates: Submit certification for welders employed on the project, verifying AWS qualification within the previous 12 months.

E. Manufacturer's Installation Instructions: Indicate special requirements for opening and perimeter framing.

1.05 QUALITY ASSURANCE

A. Designer Qualifications: Design catwalk framing and plates under direct supervision of a Professional Structural Engineer experienced in design of this type of work and licensed in the State in which the Project is located.

PART 2 PRODUCTS

2.01 PERFORMANCE REQUIREMENTS

A. Conform to applicable code for loading requirements.

B. Maximum Allowable Deflection Under Live Load: 1/240 of span; size components by single support design.

2.02 MATERIALS

A. Steel Floor Plate: ASTM A786/A786M; Checkered Plate: rolled steel floor plate; manufacturer's standard pattern..

B. Steel For Welding or Riveting: ASTM A36/A36M, unfinished, of shapes indicated.

C. Steel Framing: ASTM A36/A36M shapes, unfinished.

D. Cross Bars: ASTM B211 (ASTM B211M) solid bars.

E. Welding Materials: AWS D1.1/D1.1M; type required for materials being welded.

F. Shop and Touch-Up Primer: SSPC-Paint 15, complying with VOC limitations of authorities having jurisdiction.

2.03 ACCESSORIES

A. Perimeter Closure: ASTM A36 angle shape for toe kick.

2.04 FABRICATION

A. Fabricate plates to accommodate design loads.

B. Fabricate support framing for openings.

C. Top Surface: Checkered Plate: rolled steel floor plate; manufacturer's standard pattern..

2.05 FINISHES

A. Prepare surfaces to be primed in accordance with SSPC-SP 2.

B. Clean surfaces of rust, scale, grease, and foreign matter prior to finishing.

C. Do not prime surfaces in direct contact with concrete or where field welding is required.

D. Prime paint items with one coat.

PART 3 EXECUTION

3.01 EXAMINATION

A. Verify that field measurements are as indicated on drawings.

B. Verify that opening sizes and dimensional tolerances are acceptable.

C. Verify that supports are correctly positioned.

3.02 INSTALLATION

A. Install components in accordance with manufacturer's instructions.

B. Place frames in correct position, plumb and level.

C. Anchor by welding.

D. Secure to prevent movement.

END OF SECTION

SECTION 05 5800
ARCHITECTURAL METAL COLUMN COVERS

PART 1 - GENERAL

1.01 SUMMARY

A. Extent of Column Covers System as shown on drawings and schedules

B. Drawings and general provisions of the Contract Documents apply to work of this section.

1.02 SUBMITTALS

A. Submit complete shop drawings indicating quantities, dimensions, finishes, and attachment details.

B. Submit manufacturer's product data, specification, and installation instructions.

C. Submit color and finish samples to verify color, pattern and finish specified. Standard sample size is 5" x 7".

1.03 QUALITY ASSURANCE

A. Manufacturer shall have a minimum of 5 years' experience in manufacturing architectural metals.

1.04 DELIVERY, STORAGE, AND HANDLING

A. Deliver materials to the project site in manufacturer's original packaging, properly labeled for identification and installation purposes.

B. Store in location to avoid damage from job-site traffic, direct sunlight, moisture, stacking or other job-site contaminates.

C. Handle components to avoid denting or scratching of finished surfaces.

1.05 WARRANTY

A. Provide manufacturer's warranty against defects in material and workmanship for a period of one year.

PART 2 - PRODUCTS

2.01 MANUFACTURER

A. Acceptable products include column covers manufactured by:

1. Fry Reglet Corp.
   1377 Stonefield Court
   Alpharetta, GA 30004
   Phone: 800-955-2343
   Email: sales@fryreglet.com
2. Móz Designs, Inc.
   711 Kevin Court,
   Oakland, CA 94621
   Phone: 510-632-0853
   Email: info@mozdesigns.com
3. Firestone Building Products
   a. 1001 Lund Blvd
   b. Anoka, MN 55330
   c. Phone 800-426-7737
   d. www.firestonebpco.com

B. Substitutions: See Section 01 6000 Materials and Equipment.

2.02 PRODUCTS

A. Type 1 Basis of Design: Fry Reglet Corp., Model KS.
   1. Material
      a. Stainless steel: Type 304 stainless steel, complying with ASTM A789.
      b. Thickness: 14 ga
      c. Finish: 5-WL dimensional pattern.
   2. Manufactured Parts
      a. Full Round in two sections.
      b. Diameter/Size: Refer to drawings for dimensions.
      c. Height: Refer to drawings for dimensions.
      d. Vertical joints: Soft V butt joints.
      e. Options:
         1) Recessed Base (RB) 6” brushed stainless.
   3. At each column cover, provide Fry Reglet Corp. Reveal Wall Angle Column Ring for acoustical or gypsum board ceilings as required.
      a. Reveal: 3/4" x 3/4"
      b. Application: Drywall or Acoustical as required.
      c. Finish: White baked enamel.

B. Type 2 Basis of Design: Fry Reglet Corp., Model KS.
   1. Material
      a. Galvanized steel: Commercial grade electro- galvanized steel meeting ASTM A525, Coating Designation A-40 or A-60 with surfaces chemically treated for paint adhesion in accord with ASTM D2092, Method A, crystalline zinc phosphate treatment.
      b. Thickness: 14 gage.
      c. Finish: primed for field finishing.
      d. Joint type: Vertical: Soft V Butt joint.
      e. Ceiling detail: Adjustable inset reveal.
      f. Floor detail: Fixed inset base reveal, 6 inches high.
      g. Diameter: Refer to drawings for dimensions.
   2. At each column cover, provide Fry Reglet Corp. Reveal Wall Angle Column Ring for acoustical or gypsum board ceilings as required.
      a. Reveal: 3/4" x 3/4"
      b. Application: Drywall or Acoustical as required.
      c. Finish: Prime-painted for field finishing.

C. Type 3 Basis of Design: Firestone Building Products, Series 200.
   1. Material
      a. Aluminum plate, Type 5052 alloy complying with ASTM B209.
      b. Thickness: 0.090 inch.
      c. Finish: Coating shall be Coil-Coated Fluorocarbon Resin utilizing 70% Kynar 500 or Hylar 5000 resins.
         1) Color: custom color to match curtainwall system.
      d. Joint type: Vertical: Soft V Butt joint, with 1/2" caulked joints at intersections and panel ends.
      e. Floor detail: Fixed inset base reveal, 6 inches high.
      f. Configuration and Size: Square and rectangular, with eased edges. See drawings.

D. Fabriction
   1. Form column covers to specified dimensions and diameters as indicated on shop drawings.
   2. Provide column covers in sections a maximum 12'-0" tall per section.
   3. Provide additional sections to achieve finished heights above 12'-0".
   4. Columns shall have no exposed fasteners unless specified.
   5. Provide additional bracing components as necessary to stiffen substructure and insure solid mid-span bracings and connections. (By others)

PART 3 - EXECUTION

3.01 EXAMINATION

A. Examine job-site conditions for conditions that may adversely affect installation of column covers.

B. Verify dimensions of column covers prior to installation to assure compatibility with job-site conditions.

C. Verify post structure is plumb, level, and parallel prior to installation of column covers.

D. Visually examine finished surfaces to assure that blemished or dented surfaces are not present prior to installation.

3.02 PREPARATION

A. Verify/coordinate with other trades prior to installation insofar as they are affected by column cover installation.

3.03 INSTALLATION

A. Install components in accord with manufacturer's installation instructions and approved shop drawings.

B. Anchor components to related structures such as floors, walls and beams as indicated on approved shop drawings. Use anchors with holding strength to provide a solid installation. Use only plated, galvanized or stainless steel anchors.

3.04 CLEANING

A. Remove protective coverings and clean column covers to remove adhesives and tape residue. Test all solvents on non-exposed surfaces prior to use.
   1. For painted surfaces, use a mild detergent solution on a soft cloth.
   2. For stainless steel, use a glass cleaner and a soft cloth.
   3. For other surfaces, contact manufacturer for proper cleaning procedures.

B. Visually inspect all exposed surfaces for scratches or blemishes.

C. Protect column covers from damage during remainder of construction period.

3.05 SCHEDULE

A. Type 1 Column Covers: Performing Arts Center Lobby, Cafeteria, Stair A, Stair F, and other locations as indicated.

B. Type 2 Column Covers: Middle School Commons; other locations as indicated.

C. Type 3 Column Covers: Vestibules, Gym Lobby, and other locations adjacent to curtainwall or storefront framing.

END OF SECTION

SECTION 05 7000
DECORATIVE METAL

PART 1 GENERAL

1.01 SECTION INCLUDES

A. Factory-painted, expanded metal ceiling panels and support.

1.02 RELATED REQUIREMENTS

A. Section 05 5000 - Metal Fabrications: Supports.

1.03 REFERENCE STANDARDS

A. ASTM A307 - Standard Specification for Carbon Steel Bolts, Studs, and Threaded Rod 60 000 PSI Tensile Strength; 2014.

1.04 ADMINISTRATIVE REQUIREMENTS

A. Pre-Installation Meeting: Schedule and conduct a preinstallation meeting one week before starting work of this section. Attendees shall include, but not be limited to:
   1. Contractor.
   2. Architect.
   3. Owner's representative.
   4. Other subcontractors of adjacent work.

1.05 SUBMITTALS

A. Product Data: Submit manufacturer's product data including description of materials, components, finishes, fabrication details, glass, anchors, and accessories.

B. Shop Drawings: Indicate system elevations and sections, details of profile, dimensions, sizes, connection attachments, anchorage, size and type of fasteners, and accessories. Indicate anchor and joint locations, connections, transitions, and terminations.

C. Samples: Submit one (1) of each item below for each type and condition shown.
   1. Expanded metal ceiling panel material: 12 inch by 12 inch with panel edge.
   2. Color selector.

1.06 MOCK-UP

A. Provide mock-up of decorative ceiling panel, 4 feet long by 4 feet wide, illustrating each type of material, cladding, and finish.

B. Locate where directed.

C. Mock-up may remain as part of the Work.

1.07 DELIVERY, STORAGE, AND HANDLING

A. Deliver materials in protective coverings and packaging.

B. Protect materials against damage during transit, delivery, storage, and installation at site.

C. Inspect materials upon delivery for damage. Repair damage to be indistinguishable from undamaged areas; if damage cannot be repaired to be indistinguishable from undamaged parts and finishes, replace damaged items.

D. Prior to installation, store materials and components under cover, in a dry location.

PART 2 PRODUCTS

2.01 MANUFACTURERS

A. Decorative Metal Ceiling:

1. McNichols Co.

2.02 EXPANDED METAL CEILING SYSTEM

A. Expaned metal panels, cut to size and factory finished, supported from cold-formed steel armature.

B. Metal panels:
   1. 1/2" x 18 ga. mild steel A36 flattened expanded sheet.
      a. McNichols Part No. 5600121848

C. Finish:
   1. Factory applied powder coat finish to fabricated panels.
   2. Color: To be selected from full color range.
   3. Supporting Armature: Flat black painted finish.

2.03 ACCESSORIES

A. Anchors and Fasteners: Provide anchors and other materials as required to attach to structure; where exposed fasteners are unavoidable provide flush fasteners.
   1. For anchorage to stud walls, provide backing plates for bolting anchors.

B. Carbon Steel Bolts and Nuts: ASTM A307.

C. Sealant: Silicone; black.

D. Finish Touch-Up Materials: As recommended by manufacturer for field application.

PART 3 EXECUTION

3.01 EXAMINATION

A. Verify that substrate and site conditions are acceptable and ready to receive work.

B. Verify field dimensions of locations and areas to receive work.

C. Notify Architect immediately of conditions that would prevent satisfactory installation.

D. Do not proceed with work until detrimental conditions have been corrected.

E. Furnish components to be installed in other work to installer of that other work, including but not limited to blocking, sleeves, inserts, anchor bolts, embedded plates and supports for attachment of anchors.

3.02 PREPARATION

A. Review installation drawings before beginning installation. Coordinate diagrams, templates, instructions and directions for installation of anchorages and fasteners.

B. Clean surfaces to receive units. Remove materials and substances detrimental to the installation.

3.03 INSTALLATION

A. Comply with manufacturer's drawings and written instructions.

B. Install components accurately fitted, free from distortion or defects and with tight joints, except where necessary for expansion.

C. Anchor securely to structure.

D. Conceal anchor bolts and screws whenever possible. Where not concealed, use flush fastenings.

3.04 CLEANING

A. Metal: Clean exposed metal finishes with potable water and mild detergent, in accordance with manufacturer recommendations; do not use abrasive materials or chemicals, detergents or other substances that may damage the material or finish.

3.05 PROTECTION

A. Protect installed components and finishes from damage after installation.

B. Repair damage to exposed finishes to be indistinguishable from undamaged areas.
   1. If damage to finishes and components cannot be repaired to be indistinguishable from undamaged finishes and components, replace damaged items.

END OF SECTION

SECTION 06 1000
ROUGH CARPENTRY

PART 1 GENERAL

1.01 SECTION INCLUDES

A. Roofing nailers.

B. Preservative treated wood materials.

C. Fire retardant treated wood materials.

D. Concealed wood blocking, nailers, and supports.

1.02 RELATED REQUIREMENTS

A. Section 03 3000 - Cast-in-Place Concrete: Setting anchors in concrete.

B. Section 07 2500 - Weather Barriers: Air barrier over sheathing.

1.03 REFERENCE STANDARDS

A. ASTM A153/A153M - Standard Specification for Zinc Coating (Hot-Dip) on Iron and Steel Hardware; 2016a.

B. ASTM D2898 - Standard Test Methods for Accelerated Weathering of Fire-Retardant-Treated Wood for Fire Testing; 2010.

C. ASTM E84 - Standard Test Method for Surface Burning Characteristics of Building Materials; 2016.

D. AWPA U1 - Use Category System: User Specification for Treated Wood; 2012.

E. PS 1 - Structural Plywood; 2009.

F. PS 20 - American Softwood Lumber Standard; 2010.

1.04 SUBMITTALS

A. See Section 01 3000 - Administrative Requirements, for submittal procedures.

B. Product Data: Provide technical data on wood preservative materials and application instructions.

C. ABAA Field Quality Control Submittals: Submit third-party reports of testing and inspection required by ABAA QAP.

D. Manufacturer's Certificate: Certify that wood products supplied for rough carpentry meet or exceed specified requirements.

E. ABAA Manufacturer Qualification: Submit documentation of current evaluation of proposed manufacturer and materials.

F. ABAA Installer Qualification: Submit documentation of current contractor accreditation and current installer certification. Keep copies of all contractor accreditation and installer certification on site during and after installation. Present on-site documentation upon request.

G. Warranty: Submit manufacturer warranty and ensure that forms have been completed in Owner's name and registered with manufacturer.

1.05 QUALITY ASSURANCE

A. Air Barrier Association of America (ABAA) Evaluated Materials Program (EAP); www.airbarrier.org/#sle: Use evaluated materials from a single manufacturer regularly engaged in air barrier material manufacture. Use secondary materials approved in writing by primary material manufacturer.

1.06 DELIVERY, STORAGE, AND HANDLING

A. General: Cover wood products to protect against moisture. Support stacked products to prevent deformation and to allow air circulation.

B. Fire Retardant Treated Wood: Prevent exposure to precipitation during shipping, storage, or installation.

1.07 WARRANTY

A. See Section 01 7800 - Closeout Submittals, for additional warranty requirements.

PART 2 PRODUCTS

2.01 GENERAL REQUIREMENTS

A. Dimension Lumber: Comply with PS 20 and requirements of specified grading agencies.
   1. If no species is specified, provide any species graded by the agency specified; if no grading agency is specified, provide lumber graded by any grading agency meeting the specified requirements.
   2. Grading Agency: Any grading agency whose rules are approved by the Board of Review, American Lumber Standard Committee (www.alsc.org) and who provides grading service for the species and grade specified; provide lumber stamped with grade mark unless otherwise indicated.

B. Lumber fabricated from old growth timber is not permitted.

2.02 DIMENSION LUMBER FOR CONCEALED APPLICATIONS

A. Sizes: Nominal sizes as indicated on drawings, S4S.

B. Moisture Content: S-dry or MC19.

C. Miscellaneous Framing, Blocking, Nailers, Grounds, and Furring:
   1. Lumber: S4S, No. 2 or Standard Grade.
   2. Boards: Standard or No. 3.

2.03 CONSTRUCTION PANELS

A. Roof Sheathing: Plywood, PS 1
   1. Bond Classification: Exterior.
   2. Span Rating: 32.
   3. Performance Category: 5/8 PERF CAT.

B. Communications and Electrical Room Mounting Boards: PS 1 A-D plywood, or medium density fiberboard; 3/4 inch thick; flame spread index of 25 or less, smoke developed index of 450 or less, when tested in accordance with ASTM E84.

C. Other Applications:
   1. Plywood Concealed From View But Located Within Exterior Enclosure: PS 1, C-C Plugged or better, Exterior grade.
   2. Other Locations: PS 1, C-D Plugged or better.

2.04 ACCESSORIES

A. Fasteners and Anchors:
   1. Metal and Finish: Hot-dipped galvanized steel complying with ASTM A153/A153M for high humidity and preservative-treated wood locations, unfinished steel elsewhere.
   2. Drywall Screws: Bugle head, hardened steel, power driven type, length three times thickness of sheathing.
   3. Anchors: Toggle bolt type for anchorage to hollow masonry.

2.05 FACTORY WOOD TREATMENT

A. Treated Lumber and Plywood: Comply with requirements of AWPA U1 - Use Category System for wood treatments determined by use categories, expected service conditions, and specific applications.
   1. Fire-Retardant Treated Wood: Mark each piece of wood with producer's stamp indicating compliance with specified requirements.
   2. Preservative-Treated Wood: Provide lumber and plywood marked or stamped by an ALSC-accredited testing agency, certifying level and type of treatment in accordance with AWPA standards.

B. Fire Retardant Treatment:
   1. Manufacturers:
      a. Arch Wood Protection, Inc: www.wolmanizedwood.com.
      b. Hoover Treated Wood Products, Inc: www.frtw.com.
      c. Koppers, Inc: www.koppers.com.
      d. Substitutions: See Section 01 6000 - Product Requirements.
   2. Exterior Type: AWPA U1, Category UCFB, Commodity Specification H, chemically treated and pressure impregnated; capable of providing a maximum flame spread index of 25 when tested in accordance with ASTM E84, with no evidence of significant combustion when test is extended for an additional 20 minutes both before and after accelerated weathering test performed in accordance with ASTM D2898.
      a. Kiln dry wood after treatment to a maximum moisture content of 19 percent for lumber and 15 percent for plywood.
      b. Treat plywood panels that are a substrate for PVC trim.
      c. Treat other rough carpentry items as indicated.
      d. Do not use treated wood in direct contact with the ground.
   3. Interior Type A: AWPA U1, Use Category UCFA, Commodity Specification H, low temperature (low hygroscopic) type, chemically treated and pressure impregnated; capable of providing a maximum flame spread index of 25 when tested in accordance with ASTM E84, with no evidence of significant combustion when test is extended for an additional 20 minutes.
      a. Kiln dry wood after treatment to a maximum moisture content of 19 percent for lumber and 15 percent for plywood.
      b. Treat rough carpentry items as indicated .
      c. Do not use treated wood in applications exposed to weather or where the wood may become wet.

C. Preservative Treatment:
   1. Manufacturers:
      a. Arch Wood Protection, Inc: www.wolmanizedwood.com.
      b. Koppers Performance Chemicals, Inc: www.koppersperformancechemicals.com.
      c. Substitutions: See Section 01 6000 - Product Requirements.
   2. Preservative Pressure Treatment of Lumber Above Grade: AWPA U1, Use Category UC3B, Commodity Specification A using waterborne preservative.
      a. Kiln dry lumber after treatment to maximum moisture content of 19 percent.
      b. Treat lumber in contact with flashing or waterproofing.
      c. Treat lumber in contact with masonry or concrete.
      d. Treat lumber less than 18 inches above grade.
      e. Treat lumber in other locations as indicated.

f. Treat lumber used for wood blocking within cavity wall construction..

3. Preservative Pressure Treatment of Plywood Above Grade: AWPA U1, Use Category UC2 and UC3B, Commodity Specification F using waterborne preservative.
   a. Kiln dry plywood after treatment to maximum moisture content of 19 percent.
   b. Treat plywood in contact with flashing or waterproofing.
   c. Treat plywood in contact with masonry or concrete.
   d. Treat plywood less than 18 inches above grade.
   e. Treat plywood in other locations as indicated.
   f. Treat plywood used for wood blocking within cavity wall construction..

PART 3 EXECUTION

3.01 INSTALLATION - GENERAL

A. Select material sizes to minimize waste.

B. Reuse scrap to the greatest extent possible; clearly separate scrap for use on site as accessory components, including: shims, bracing, and blocking.

C. Where treated wood is used on interior, provide temporary ventilation during and immediately after installation sufficient to remove indoor air contaminants.

3.02 BLOCKING, NAILERS, AND SUPPORTS

A. Provide framing and blocking members as indicated or as required to support finishes, fixtures, specialty items, and trim.

B. In metal stud walls, provide continuous blocking around door and window openings for anchorage of frames, securely attached to stud framing.

C. In walls, provide blocking attached to studs as backing and support for wall-mounted items, unless item can be securely fastened to two or more studs or other method of support is explicitly indicated.

D. Where ceiling-mounting is indicated, provide blocking and supplementary supports above ceiling, unless other method of support is explicitly indicated.

E. Provide the following specific non-structural framing and blocking:
   1. Cabinets and shelf supports.
   2. Wall brackets.
   3. Handrails.
   4. Grab bars.
   5. Towel and bath accessories.
   6. Wall-mounted door stops.
   7. Chalkboards and marker boards.
   8. Wall paneling and trim.
   9. Joints of rigid wall coverings that occur between studs.
   10. TV and monitor mounts.

3.03 ROOF-RELATED CARPENTRY

A. Coordinate installation of roofing carpentry with deck construction, framing of roof openings, and roofing assembly installation.

3.04 INSTALLATION OF CONSTRUCTION PANELS

A. Roof and Wall Sheathing: Secure panels with long dimension perpendicular to framing members, with ends staggered and over firm bearing.

1. At long edges provide solid edge blocking where joints occur between roof framing members.
2. Screw panels to framing; staples are not permitted.

B. Communications and Electrical Room Mounting Boards: Secure with screws to studs with edges over firm bearing; space fasteners at maximum 24 inches on center on all edges and into studs in field of board.
1. At fire-rated walls, install board over wall board indicated as part of the fire-rated assembly.
2. Where boards are indicated as full floor-to-ceiling height, install with long edge of board parallel to studs.
3. Install adjacent boards without gaps.

3.05 SITE APPLIED WOOD TREATMENT

A. Apply preservative treatment compatible with factory applied treatment at site-sawn cuts, complying with manufacturer's instructions.

B. Allow preservative to dry prior to erecting members.

3.06 CLEANING

A. Do not leave any wood, shavings, sawdust, etc. on the ground or buried in fill.

B. Prevent sawdust and wood shavings from entering the storm drainage system.

END OF SECTION

SECTION 06 2000
FINISH CARPENTRY

PART 1 GENERAL

1.01 SECTION INCLUDES

A. Finish carpentry items.
   1. Custom plastic laminate and solid surfacing reception desks.
   2. Solid surfacing window stools.
   3. Standing and running wood trim.
   4. Hang doors, install hardware.
   5. Wood veneer paneling.
   6. Plastic laminate veneer paneling.

1.02 RELATED REQUIREMENTS

A. Section 06 1000 - Rough Carpentry: Support framing, grounds, and concealed blocking.

B. Section 06 6500 - Plastic Simulated Wood Trim

C. Section 12 3600 - Countertops, Backsplashes and Window Stools: Solid Surface material.

1.03 REFERENCE STANDARDS

A. ASTM E84 - Standard Test Method for Surface Burning Characteristics of Building Materials; 2016.

B. AWI/AWMAC/WI (AWS) - Architectural Woodwork Standards; 2014.

C. AWMAC/WI (NAAWS) - North American Architectural Woodwork Standards, U.S. Version 3.0; 2016.

D. AWPA U1 - Use Category System: User Specification for Treated Wood; 2012.

E. HPVA HP-1 - American National Standard for Hardwood and Decorative Plywood; 2009.

F. NEMA LD 3 - High-Pressure Decorative Laminates; 2005.

1.04 SUBMITTALS

A. Product Data:
   1. Provide data on fire retardant treatment materials and application instructions.

B. Shop Drawings: Indicate materials, component profiles, fastening methods, jointing details, and accessories.
   1. Provide the information required by AWI/AWMAC/WI (AWS) or AWMAC/WI (NAAWS).
   2. Include certification program label.

C. Samples: Plastic laminate for finish selection.

D. Samples: Submit two samples of wood trim 12 inch long.

E. Certificate: Submit labels and certificates required by quality assurance and quality control programs.

1.05 QUALITY ASSURANCE

A. Fabricator Qualifications: Company specializing in fabricating the products specified in this section with minimum five years of documented experience.
   1. Accredited participant in the specified certification program prior to the commencement of fabrication and throughout the duration of the project.
   2. Single Source Responsibility: Provide and install this work from single fabricator.

B. Quality Certification:
   1. Provide labels or certificates indicating that the work complies with AWI/AWMAC/WI (AWS) or AWMAC/WI (NAAWS) requirements for grade or grades specified.
   2. Provide designated labels on shop drawings as required by certification program.
   3. Provide designated labels on installed products as required by certification program.
   4. Submit certifications upon completion of installation that verifies this work is in compliance with specified requirements.

1.06 DELIVERY, STORAGE, AND HANDLING

A. Protect work from moisture damage.

PART 2 PRODUCTS

2.01 FINISH CARPENTRY ITEMS

A. Quality Standard: Premium Grade, in accordance with AWI/AWMAC/WI (AWS) or AWMAC/WI (NAAWS), unless noted otherwise.

B. Surface Burning Characteristics: Provide materials having fire and smoke properties as required by applicable code.

C. Interior Woodwork Items:
   1. Moldings, Bases, Casings, and Miscellaneous Trim: White Maple; prepare for transparent finish.
   2. Wall panels: White maple veneer plywood; prepare for transparent finish.
   3. Window Stools and Aprons: Solid Surface Material.
   4. Custom reception desks, plastic laminate finish.

2.02 WOOD-BASED COMPONENTS

A. Wood fabricated from old growth timber is not permitted.

2.03 LUMBER MATERIALS

A. Hardwood Lumber: White Maple species, quarter sawn, maximum moisture content of 6 percent, of quality suitable for transparent finish.

2.04 SHEET MATERIALS

A. Hardwood Plywood: Face species White Maple, quarter cut, book matched, medium density fiberboard core; HPVA HP-1, Front Face Grade AA, Back Face Grade 1, glue type as recommended for application.

2.05 PLASTIC LAMINATE MATERIALS

A. Plastic Laminate: NEMA LD 3, HGS; color as selected by Architect; satin finish.

B. Laminate Backing Sheet: NEMA LD 3, BKL; undecorated plastic laminate.

C. Laminate Adhesive: Type recommended by laminate manufacturer to suit application; not containing formaldehyde or other volatile organic compounds.

2.06 FASTENINGS

A. Adhesive for Purposes Other Than Laminate Installation: Suitable for the purpose; not containing formaldehyde or other volatile organic compounds.

B. Concealed Joint Fasteners: Threaded steel.

2.07 ACCESSORIES

A. Primer: as specified in Section 09 9000.

B. Wood Filler: Solvent base, tinted to match surface finish color.

2.08 WOOD TREATMENT

A. Fire Retardant Treatment (FR-S Type): Chemically treated and pressure impregnated; capable of providing flame spread index of 25, maximum, and smoke developed index of 450, maximum, when tested in accordance with ASTM E84.

B. Wood Preservative by Pressure Treatment (PT Type): Provide AWPA U1 treatment using waterborne preservative with 0.25 percent retainage.

C. Shop pressure treat wood materials requiring fire rating to concealed wood blocking.

D. Provide identification on fire retardant treated material.

E. Redry wood after pressure treatment to maximum 10 percent moisture content.

2.09 FABRICATION

A. Shop assemble work for delivery to site, permitting passage through building openings.

B. Cap exposed plastic laminate finish edges with material of same finish and pattern.

C. When necessary to cut and fit on site, provide materials with ample allowance for cutting. Provide trim for scribing and site cutting.

D. Apply plastic laminate finish in full uninterrupted sheets consistent with manufactured sizes. Fit corners and joints hairline; secure with concealed fasteners. Slightly bevel arises. Locate counter butt joints minimum 2 feet from sink cut-outs.

E. Apply laminate backing sheet to reverse face of plastic laminate finished surfaces.

2.10 SHOP FINISHING

A. Apply wood filler in exposed nail and screw indentations.

B. On items to receive transparent finishes, use wood filler that matches surrounding surfaces and is of type recommended for the applicable finish.

C. Finish work in accordance with AWI/AWMAC/WI (AWS) or AWMAC/WI (NAAWS), Section 5 - Finishing for grade specified and as follows:

1. Transparent:
   a. System - 11, Polyurethane, Catalyzed.
   b. Sheen: Satin.

D. Back prime woodwork items to be field finished, prior to installation.

PART 3 EXECUTION

3.01 EXAMINATION

A. Verify adequacy of backing and support framing.

B. Verify mechanical, electrical, and building items affecting work of this section are placed and ready to receive this work.

3.02 INSTALLATION

A. Hang doors and install hardware.

B. Install work in accordance with AWI/AWMAC/WI (AWS) requirements for grade indicated.

C. Set and secure materials and components in place, plumb and level.

D. Carefully scribe work abutting other components, with maximum gaps of 1/32 inch. Do not use additional overlay trim to conceal larger gaps.

E. Install interior wood trim with finish nails or finish screws, set for filler.

F. Install solid surface window stools.

G. Install PVC trim boards and paneling in accordance with manufacturer's instructions.

3.03 SITE APPLIED WOOD TREATMENT

A. Apply preservative treatment in accordance with manufacturer's instructions.

B. Brush apply one coats of preservative treatment on wood in contact with cementitious materials. Treat site-sawn cuts.

C. Allow preservative to dry prior to erecting members.

3.04 PREPARATION FOR SITE FINISHING

A. Set exposed fasteners. Apply wood filler in exposed fastener indentations. Sand work smooth.

B. Before installation, prime paint surfaces of wood items or assemblies to be in contact with cementitious materials.

3.05 TOLERANCES

A. Maximum Variation from True Position: 1/16 inch.

B. Maximum Offset from True Alignment with Abutting Materials: 1/32 inch.

END OF SECTION

SECTION 06 6500
PLASTIC SIMULATED WOOD TRIM

PART 1 GENERAL

1.01 SECTION INCLUDES

A. Cellular PVC Trim Boards and Panels for:
   1. Cornices
   2. Soffits
   3. Fascia
   4. Battens
   5. Trim

1.02 RELATED SECTIONS

A. Section 06 1000 - Rough Carpentry: Blocking and substrates for PVC trim and panels.

B. Section 06 20 00 - Finish Carpentry.

C. Section 07 9200 - Joint Sealants

1.03 REFERENCES

A. ASTM D 792 - Density and Specific Gravity of Plastics by Displacement.

B. ASTM D 570 - Water Absorption of Plastics.

C. ASTM D 638 - Tensile Properties of Plastics.

D. ASTM D 790 - Flexural Properties of Unreinforced and Reinforced Plastics and Electrical Insulating Materials.

E. ASTM D 1761 - Mechanical Fasteners in Wood.

F. ASTM D 5420 - Standard Test Method for Impact Resistance of Flat, Rigid Plastic Specimen by means of a Striker Impacted by a Falling Weight.

G. ASTM D 256 - Determining the Pendulum Impact Resistance of Plastics.

H. ASTM D 696 - Coefficient of Linear Thermal Expansion of Plastics Between minus 30 degrees C and plus 30 degrees C with a Vitreous Silica Dilatometer.

I. ASTM D 635 - Rate of Burning and/or Extent and Time of Burning of Plastics in a Horizontal Position.

J. ASTM E 84 - Surface Burning Characteristics of Building Materials.

K. ASTM D 648 - Deflection Temperature of Plastics Under Flexural Load in the Edgewise Position.

L. ASTM D 3679 - Standard Specification for Rigid Poly Vinyl Chloride (PVC) Siding.

M. ASTM D 2240 - Rubber Property - Durometer Hardness

N. ASTM D 3345 - Standard Test Method for Laboratory Evaluation of Wood and Other Cellulosic Materials for Resistance to Termites.

1.04 SUBMITTALS

A. Submit under provisions of Section 01 3000 - Administrative Requirements.

B. Product Data: Manufacturer's data sheets on each product to be used, including:
   1. Preparation instructions and recommendations.
   2. Storage and handling requirements and recommendations.
   3. Installation methods.

C. Verification Samples: For each product specified, two samples, minimum size 6 inches (150 mm) long, representing actual product, color, and finish.

D. Manufacturer's Certificates: Certify products meet or exceed specified requirements.

1.05 QUALITY ASSURANCE

A. Manufacturer Qualifications: Manufacturer with a minimum of 5 years producing PVC trim products.

B. Installer Qualifications: Installer with a minimum of 3 years experience with the installation of PVC trim products.

C. Mock-Up: Provide a mock-up for evaluation of surface preparation techniques and application workmanship.
   1. Finish areas designated by Architect.
   2. Do not proceed with remaining work until workmanship, color, and sheen are approved by Architect.
   3. Refinish mock-up area as required to produce acceptable work.
   4. Accepted mock-ups shall be comparison standard for remaining Work
   5. Coordinate with Mock-Up specified in Section 04 2000.

1.06 DELIVERY, STORAGE, AND HANDLING

A. Store products on a flat and level surface on a full shipping pallet. Handle materials to prevent damage to product edges and corners.

B. Store materials under a protective covering to prevent jobsite dirt and residue from collecting on the boards.

1.07 SEQUENCING

A. Ensure that products of this section are supplied to affected trades in time to prevent interruption of construction progress.

1.08 PROJECT CONDITIONS

A. Maintain environmental conditions (temperature, humidity, and ventilation) within limits recommended by manufacturer for optimum results. Do not install products under environmental conditions outside manufacturer's absolute limits.

1.09 WARRANTY

A. Provide manufacturer's transferable limited lifetime warranty against defects in manufacturing that causes the products to rot, corrode, delaminate, or excessively swell from moisture.

PART 2 PRODUCTS

2.01 MANUFACTURERS

A. Basis of Design: AZEK Trimboards: www.azek.com

B. Other Approved Manufacturers:
   1. Versatex: www.versatex.com
   2. Substitutions: See Section 01 6000: Materials and Equipment.

2.02 MATERIALS

A. PVC: Cellular PVC material with a small-cell microstructure and density of .55 grams/cm3.

B. Performance and physical characteristic requirements:
   1. Physical:
      a. Density: 0.55 g/cm3when tested in accordance with ASTM D 792.

b. Water Absorption: Less then 0.50 percent when tested in accordance with ASTM D 570

2. Mechanical:
   a. Tensile Strength: 3582 psi when tested in accordance with ASTM D 638.
   b. Tensile Modulus: 107,000 psi when tested in accordance with ASTM D 638.
   c. Flexural Strength: 5179 psi when tested in accordance with ASTM D 790.
   d. Flexural Modulus: 215,600 psi when tested in accordance with ASTM D 790.
   e. Modulus of Elasticity: 209,500 psi when tested in accordance with ASTM D 638.
   f. Elongation: 9.0 percent when tested in accordance with ASTM D 638.
   g. Nail Hold: 398 lbf/in of penetration when tested in accordance with ASTM D 1761.
   h. Compressive Strength: 6,553 psi (thickness dependent)
   i. Compressive modulus: 2,305 lbf/in (thickness dependent)
   j. Screw Hold: 240 lbf/in of penetration when tested in accordance with ASTM D 1761.
   k. Staple Hold: 69 lbf/in of penetration when tested in accordance with ASTM D 1761.
   l. Gardner Impact: 34 In-lbs when tested in accordance with ASTM D 5420.
   m. Notched Izod Impact: 0.270 Ft-lbs/inch when tested in accordance with ASTM D 256.
   n. Termite Resistance: Rating of 10 as tested in accordance with ASTM D 3345.
   o. Hardness: 60+ when tested in accordance with ASTM D 2240.
   p. Parking Garage Ceiling Soffit System: 225 psf when tested in accordance with UL 580.
3. Thermal:
   a. Coefficient of Linear Expansion: 3.25 x 10-5 in/in/degrees F when tested in accordance with ASTM D 696.
   b. Burning Rate: Failed to Ignite when tested in accordance with ASTM D 635.
   c. Flame Spread Index: 20 when tested in accordance with ASTM E 84.
   d. Heat Deflection Temp (264 psi): 146 degrees F when tested in accordance with ASTM D 648.
   e. Heat Deflection Temp (66 psi): 153 degrees F when tested in accordance with ASTM D 648.
   f. Oil Canning (@ 140 degrees F: Passed when tested in accordance with ASTM D 648.
4. Manufacturing Tolerances:
   a. Variation in component length: Minus 0.00 / plus 1.00.
   b. Variation in component width: plus or minus 1/32 inch.
   c. Variation in component thickness: plus or minus 1/32 inch.
   d. Variation in component edge cut: plus or minus 2 degrees.
   e. Variation in Density plus or minus 0.02 grams per cubic centimeter.
5. Workmanship, Finish, and Appearance:
   a. Free Foam Cellular PVC that is homogeneous and free of voids, holes, cracks, foreign inclusions and other defects. Edges must be square and top and bottom surfaces shall be flat with no convex or concave deviation.
   b. Uniform surface free from cupping, warping, and twisting.

C. SIMULATED WOOD TRIM
1. PVC Trimboard: Cellular Foam Trimboard with Sealed Edge.
   a. Nominal Width: as shown
   b. Nominal Thickness:

1) 1 inch (3/4 inch actual size)
2) 5/4 inch (1 inch actual size)

c. Finish:
1) Smooth/Smooth finish

2. Sheet Board: Cellular PVC S4S (Smooth) Sheet. For use as sheet materials or to create columns and gingerbread millwork.
a. Size: as shown.
b. Thickness:
1) 3/4 inch
c. Finish:
1) Smooth/Smooth finish
d. Soffits: Vented.

D. ACCESSORIES
1. Fasteners:
a. Use 12 gauge stainless steel fasteners designed for wood trim and siding. Fastener should have sufficient flexural and tensile strength to resist bending.
b. Use fasteners with thin shanks, blunt points, and full round heads that are long enough to penetrate the substrate a minimum of 1-1/4 inches.
c. Do not use staples, small brads and wire nails. Avoid using fine threaded wood screws and ring-shank fasteners.
d. Use standard nail guns with a pressure setting between 70 psi and 100 psi. The recommended pressure depends on the type of gun, type of nail, ambient temperature, and the substrate. Care should be taken not to overdrive the nail into the material.
e. Pre-drilling is not typically required unless large fasteners are used or the product is installed during temperatures below 40 degrees F.
f. Use two fasteners for every framing member for trimboard applications. Sheet and trimboards 8 inches and wider require additional fasteners.
g. Install fasteners no more than 2 inches from the end of each board.
h. Avoid fastening simulated wood trim over hollow or uneven areas. Fasten onto flat, solid substrates.
2. Adhesives: Finishing System.
a. All bonded surfaces must be smooth, clean, and in complete contact with each other for best results.
b. Adhere simulated wood trim to itself with PVC cement or cellular PVC adhesives to prevent joint separation. Acceptable adhesives are PVC Trim Welder, IPS Weld-On 705 (white), and Zevo PVC Trim adhesive.
c. Scarf cut joints are recommended where applicable.
d. Bonded joints should be secured with fasteners and fastened with two rows on each side of the joint.
e. When bonding simulated wood trim to other substrates, consult the adhesive manufacturer to determine suitability.
3. Nail Hole Filler: Cortex plug system by Fasten Master.
4. Sealants:
a. Use polyurethane, polymer blends or acrylic based sealants that do not contain silicone as specified in Section 07 9200 - Joint Sealers.

PART 3 EXECUTION

3.01 EXAMINATION

A. Do not begin installation until substrates have been properly prepared.

B. Notify Architect of unsatisfactory preparation before proceeding.

3.02 PREPARATION

A. Clean surfaces thoroughly prior to installation.

B. Prepare surfaces using the methods recommended by the manufacturer for achieving the best result for the substrate under the project conditions.

3.03 INSTALLATION

A. Install in accordance with manufacturer's instructions.

B. Cutting:
   1. Simulated wood trim can be cut using standard woodworking saws. Conventional carbide-tipped blades designed for cutting wood are preferred. Avoid using fine-tooth metal-cutting blades.
   2. Rough-cut edges are typically caused by excessive friction, poor board support, or worn or improper tooling.

C. Drilling:
   1. Simulated wood trim can be drilled using standard woodworking drill bits. Do not use drill bits made for rigid PVC.
   2. Avoid frictional heat build-up.
   3. Remove shavings periodically from a drill hole as necessary.

D. Milling and Moulding:
   1. Simulated wood trim can be milled or moulded using standard milling or moulding machines found in millwork shops.
   2. Rake angle 20 to 30 degrees. 25 degrees is recommended.
   3. Cutting speed to be optimized with the number of knives and feed rate.

E. Routing:
   1. Simulated wood trim can be routed with virtually any piece of equipment used to rout wood.
   2. Carbide tipped router bits are recommended.
   3. Machinery that allows for multiple cutting speeds will allow you to optimize the process obtaining a smoother finished part.

F. Edge Finishing:
   1. Traditional sanding, grinding or filing tools used for woodworking are preferred.

G. Nail Location:
   1. For trimboard applications use two fasteners per framing member.
   2. Use additional fasteners (3/4 inch preferred) for trimboard 8 inches and wider.
   3. Install fasteners a maximum of 2 inches from the end of each board.

H. Expansion and Contraction:
   1. Simulated wood trim expands and contracts with changes in temperature. Properly fastening along the entire length is required to minimize expansion and contraction.
   2. Allow 3/16 inch space per 18-foot run of trim for expansion and contraction.
   3. Bond joints between pieces of simulated wood trim to eliminate separation.
   4. Allow expansion and contraction space at the ends of long runs.

3.04 CLEANING:

A. Clean simulated wood trim with mild detergent and water, in accordance with manufacturers instructions..

B. Products with pumice, such as Soft Scrub, may be applied with a nylon brush.

C. For more stubborn stains use a mild household cleaner and degreaser.

3.05 PROTECTION

A. Protect installed products until completion of project.

B. Touch-up, repair or replace damaged products before Substantial Completion.

END OF SECTION

SECTION 07 1113
BITUMINOUS DAMPPROOFING

PART 1 GENERAL

1.01 SECTION INCLUDES

A. Bituminous dampproofing.

B. Protection boards.

C. Drainage panels.

1.02 REFERENCE STANDARDS

A. ASTM D41/D41M - Standard Specification for Asphalt Primer Used in Roofing, Dampproofing, and Waterproofing; 2011 (Reapproved 2016).

B. ASTM D1187/D1187M - Standard Specification for Asphalt-Base Emulsions for Use as Protective Coatings for Metal; 1997 (Reapproved 2011).

C. ASTM D1227 - Standard Specification for Emulsified Asphalt Used as a Protective Coating for Roofing; 2013.

1.03 SUBMITTALS

A. Product Data: Provide properties of primer, bitumen, and mastics.

B. Manufacturer's Installation Instructions: Indicate special procedures and perimeter conditions requiring special attention.

1.04 QUALITY ASSURANCE

A. Installer Qualifications: Company specializing in performing the work of this section with at least three years of experience.

1.05 FIELD CONDITIONS

A. Maintain ambient temperatures above 40 degrees F for 24 hours before and during application until dampproofing has cured.

PART 2 PRODUCTS

2.01 BITUMINOUS DAMPPROOFING

A. Bituminous Dampproofing: Cold-applied water-based emulsion; asphalt with mineral colloid or chemical emulsifying agent; with or without fiber reinforcement; asbestos-free; suitable for application on vertical and horizontal surfaces.

1. Composition - Vertical Application: ASTM D1227 Type III or ASTM D1187/D1187M Type I.
2. VOC Content: Not more than permitted by local, State, and federal regulations.
3. Applied Thickness: 1/16 inch, minimum, wet film.
4. Products:
   a. W. R. Meadows, Inc; Sealmastic Emulsion Type I (spray-grade): www.wrmeadows.com/sle.
   b. Substitutions: See Section 01 6000 - Product Requirements.

B. Primers, Mastics, and Related Materials: Type as recommended by dampproofing manufacturer.

2.02 BITUMEN MATERIALS

A. Cold Asphaltic Type:

1. Bitumen: Emulsified asphalt, ASTM D1227;unreinforced (Type III).

2. Asphalt Primer: ASTM D41/D41M, compatible with substrate.

2.03 ACCESSORIES

A. Drainage Panel: 1/4 inch thick formed plastic, hollowed sandwich.

B. Protection Board: 1/8 inch thick biodegradable hardboard.

PART 3 EXECUTION

3.01 EXAMINATION

A. Verify existing conditions are acceptable prior to starting this work.

B. Verify substrate surfaces are durable, free of matter detrimental to adhesion or application of dampproofing system.

C. Verify that items penetrating surfaces to receive dampproofing are securely installed.

3.02 PREPARATION

A. Protect adjacent surfaces not designated to receive dampproofing.

B. Clean and prepare surfaces to receive dampproofing in accordance with manufacturer's instructions.

C. Do not apply dampproofing to surfaces unacceptable to manufacturer.

D. Apply mastic to seal penetrations, small cracks, or minor honeycombs in substrate.

3.03 APPLICATION

A. Foundation Walls: Apply two coats of asphalt dampproofing.

B. Perform this work in accordance with manufacturer's instructions and NRCA (WM) applicable requirements.

C. Prime surfaces at a rate approved by manufacturer for application indicated, and allow primer to dry thoroughly.

D. Apply bitumen by spray application.

E. Apply bitumen in one coat, continuous and uniform, at a rate of 25 sq ft/gal per coat.

F. Apply from 2 inches below finish grade elevation, or below first course of face brick, down to top of grade beam at locations where two or more CMU courses are below grade.

G. Seal items watertight with mastic, that project through dampproofing surface.

H. Place drainage panel directly over dampproofing, butt joints, place to encourage drainage downward.

I. Place protection board over drainage panel, butt joints, and adhere with mastic.

J. Scribe and cut boards around projections, penetrations, and interruptions.

END OF SECTION

SECTION 07 1300
SHEET WATERPROOFING

PART 1 GENERAL

1.01 SECTION INCLUDES

A. Sheet Waterproofing:
   1. Self-adhered modified bituminous sheet membrane.
   2. Self-adhered HDPE sheet membrane.

B. Drainage panels and protection board.

1.02 RELATED REQUIREMENTS

A. Section 03 3000 - Cast-in-Place Concrete: Concrete substrate.

B. Section 04 2000 - Unit Masonry: CMU substrate.

C. Section 07 9200 - Joint Sealants: Sealing moving joints in waterproofed surfaces that are not required to be treated in this section.

1.03 ABBREVIATIONS

A. HDPE - High-Density Polyethylene.

B. NRCA - National Roofing Contractors Association.

1.04 REFERENCE STANDARDS

A. ASTM D412 - Standard Test Methods for Vulcanized Rubber and Thermoplastic Elastomers--Tension; 2006a (Reapproved 2013).

B. ASTM D570 - Standard Test Method for Water Absorption of Plastics; 1998 (Reapproved 2010).

C. ASTM D882 - Standard Test Method for Tensile Properties of Thin Plastic Sheeting; 2012.

D. ASTM D903 - Standard Test Method for Peel or Stripping Strength of Adhesive Bonds; 1998 (Reapproved 2010).

E. ASTM D1876 - Standard Test Method for Peel Resistance of Adhesives (T-Peel Test); 2008 (Reapproved 2015).

F. ASTM D1970/D1970M - Standard Specification for Self-Adhering Polymer Modified Bituminous Sheet Materials Used as Steep Roofing Underlayment for Ice Dam Protection; 2013.

G. ASTM D5385/D5385M - Standard Test Method for Hydrostatic Pressure Resistance of Waterproofing Membranes; 1993 (Reapproved 2014).

H. ASTM E96/E96M - Standard Test Methods for Water Vapor Transmission of Materials; 2014.

I. ASTM E154/E154M - Standard Test Methods for Water Vapor Retarders Used in Contact with Earth Under Concrete Slabs, on Walls, or as Ground Cover; 2008a (Reapproved 2013).

J. NRCA (WM) - The NRCA Waterproofing Manual; 2005.

1.05 SUBMITTALS

A. See Section 01 3000 - Administrative Requirements, for submittal procedures.

B. Product Data: Provide data for membrane.

C. Shop Drawings: Indicate special joint or termination conditions and conditions of interface with other materials.

D. Certificate: Certify that products meet or exceed specified requirements.

E. Manufacturer's Installation Instructions: Indicate special procedures.

F. Warranty: Submit manufacturer warranty and ensure forms have been completed in Owner's name and registered with manufacturer.

1.06 QUALITY ASSURANCE

A. Membrane Manufacturer Qualifications: Company specializing in manufacturing products specified in this section, with not less than three years of documented experience.

B. Installer Qualifications: Company specializing in performing work of the type specified and with at least three years of documented experience.

1.07 FIELD CONDITIONS

A. Maintain ambient temperatures above 40 degrees F for 24 hours before and during application and until liquid or mastic accessories have cured.

1.08 WARRANTY

A. See Section 01 7800 - Closeout Submittals, for additional warranty requirements.

B. Contractor shall correct defective Work within a five year period after Date of Substantial Completion; remove and replace materials concealing waterproofing at no extra cost to Owner.

C. Provide five year manufacturer warranty for waterproofing failing to resist penetration of water, except where such failures are the result of structural failures of building. Hairline cracking of concrete due to temperature change or shrinkage is not considered a structural failure.

PART 2 PRODUCTS

2.01 MEMBRANE MATERIALS

A. Self-Adhered Modified Bituminous Sheet Membrane:
1. Thickness: 60 mil, 0.060 inch, minimum.
2. Sheet Width: 36 inch, minimum.
3. Tensile Strength:
   a. Film: 5000 pounds per square inch, minimum, measured according to ASTM D882 and at grip-separation rate of 2 inches per minute.
   b. Membrane: 325 pounds per square inch, minimum, measured according to ASTM D412 Method A, using die C and at spindle-separation rate of 2 inches per minute.
4. Elongation at Break: 300 percent, minimum, measured according to ASTM D412.
5. Water Vapor Permeance: 0.05 perm, maximum, measured in accordance with ASTM E96/E96M.
6. Low Temperature Flexibility: Unaffected when tested according to ASTM D1970/D1970M at minus 20 degrees F, 180 degree bend on 1 inch mandrel.
7. Peel Strength: 7 pounds per inch, minimum, when tested according to ASTM D903.
8. Lap Adhesion Strength: 5 pounds per inch, minimum, when tested according to ASTM D1876.
9. Puncture Resistance: 50 pounds, minimum, measured in accordance with ASTM E154/E154M.
10. Water Absorption: 0.1 percent increase in weight, maximum, measured in accordance with ASTM D570, 24 hour immersion.
11. Hydrostatic Resistance: Resists the weight of 200 feet when tested according to ASTM D5385/D5385M.
12. Adhesives, Sealants, Tapes, and Accessories: As recommended by membrane manufacturer.

13. Manufacturers:
    a. Carlisle Coatings & Waterproofing Inc; MiraDRI 860/861: www.carlisleccw.com/#sle.
    b. GCP Applied Technologies; Bituthene: www.gcpat.com.
    c. Henry Company; Blueskin WP 200: www.henry.com/#sle.
    d. Substitutions: See Section 01 6000 - Product Requirements.

B. Self-Adhered HDPE Sheet Membrane: Recommended by manufacturer for placement below concrete slabs and on outside face of below grade walls before placement of concrete.
1. Sheet Thickness: 46 mil (0.046 inch), minimum.
2. Low Temperature Flexibility: Unaffected when tested according to ASTM D1970/D1970M at minus 20 degrees F, 180 degree bend on 1 inch mandrel.
3. Hydrostatic Resistance: Resists the weight of 231 feet when tested according to ASTM D5385/D5385M.
4. Elongation at Break: 500 percent, minimum, measured according to ASTM D412.
5. Tensile Strength, Film: 3,500 pounds per square inch, minimum, measured according to ASTM D412.
6. Lap Peel Adhesion: 5 pounds per inch, minimum, when tested according to ASTM D1876.
7. Water Vapor Permeance: 0.01 perm, maximum, measured in accordance with ASTM E96/E96M.
8. Bond to Concrete: 5 pounds per inch, minimum, per ASTM D903.
9. Lateral Water Migration Resistance: Resists the weight of 231 feet when tested according to ASTM D5385/D5385M.
10. Adhesives, Sealants, Tapes, and Accessories: As recommended by membrane manufacturer.
11. Manufacturers:
    a. GCP Applied Technologies; Preprufe 300R: www.gcpat.com/#sle.
    b. W. R. Meadows: PRECON: www.wrmeadows.com.
    c. Substitutions: See Section 01 6000 - Product Requirements.

C. Seaming Materials: As recommended by membrane manufacturer.

D. Membrane Sealant: As recommended by membrane manufacturer.

2.02 ACCESSORIES

A. Sealant for Cracks and Joints In Substrates: Resilient elastomeric joint sealant compatible with substrates and waterproofing materials.

B. Protection Board: Provide type capable of preventing damage to waterproofing due to backfilling and construction traffic.

C. Drainage Panel: Drainage layer with geotextile filter fabric on earth side.
1. Composition: Dimpled polystyrene core; polypropylene filter fabric.
2. Products:
    a. Epro Services, Inc; ECODRAIN-MS: www.eproserv.com/#sle.
    b. Mar-flex Waterproofing & Building Products; ArmorDrain 150: www.mar-flex.com/#sle.
    c. Mar-flex Waterproofing & Building Products; ArmorDrain 400 Protection/Drainage Board: www.mar-flex.com/#sle.

D. Flexible Flashings: Type recommended by membrane manufacturer.

PART 3 EXECUTION

3.01 EXAMINATION

A. Verify existing conditions are acceptable prior to starting this work.

B. Verify substrate surfaces are durable; free of matter detrimental to adhesion or application of waterproofing system.

C. Verify items that penetrate surfaces to receive waterproofing are securely installed.

3.02 PREPARATION

A. Protect adjacent surfaces from damage not designated to receive waterproofing.

B. Clean and prepare surfaces to receive waterproofing in accordance with manufacturer's instructions.

C. Do not apply waterproofing to surfaces unacceptable to membrane manufacturer.

D. Fill non-moving joints and cracks with a filler compatible with waterproofing materials.

E. Seal moving cracks with sealant and non-rigid filler, using procedures recommended by sealant and waterproofing manufacturers.

F. Prepare building expansion joints at locations as indicated on drawings.

G. Apply surface conditioner at a rate recommended by manufacturer, and protect conditioner from rain or frost until dry.

3.03 INSTALLATION - MEMBRANE

A. Install membrane waterproofing in accordance with manufacturer's instructions and NRCA (WM) applicable requirements.

B. Roll out membrane, and minimize wrinkles and bubbles.

C. Self-Adhering Membrane: Remove release paper layer, and roll out onto substrate with a mechanical roller to provide full contact bond.

D. Overlap edges and ends, minimum 3 inches, seal permanently waterproof by method recommended by manufacturer, and apply uniform bead of sealant to joint edge.

E. Reinforce membrane with multiple thickness of membrane material over joints, whether joints are static or dynamic.

F. Weather lap joints on sloped substrate in direction of drainage, and seal joints and seams.

G. Flexible Flashings: Seal items watertight that penetrate through waterproofing membrane with flexible flashings.

H. Seal membrane and flashings to adjoining surfaces.

3.04 INSTALLATION - DRAINAGE PANEL AND PROTECTION BOARD

A. Place drainage panel directly against membrane, butt joints, place to encourage drainage downward. Scribe and cut boards around projections, penetrations, and interruptions.

B. Place protection board directly against drainage panel; butt joints. Scribe and cut boards around projections, penetrations, and interruptions.

C. Adhere protection board to substrate with compatible adhesive.

3.05 PROTECTION

A. Do not permit traffic over unprotected or uncovered membrane.

END OF SECTION

SECTION 07 2100
THERMAL INSULATION

PART 1 GENERAL

1.01 SECTION INCLUDES

A. Board insulation at perimeter foundation wall.

B. Batt insulation in exterior wall construction.

C. Acoustical insulation in interior acoustically rated partitions.

D. Fire safing insulation at fire partitions and perimeter firestopping at curtain walls.

1.02 RELATED REQUIREMENTS

A. Section 07 2640 - Spray Polyurethane Foam Insulating Air Barrier: Plastic foam insulation other than boards.

B. Section 07 5300 - Elastomeric Membrane Roofing: Insulation specified as part of roofing system.

1.03 REFERENCE STANDARDS

A. ASTM C553 - Standard Specification for Mineral Fiber Blanket Thermal Insulation for Commercial and Industrial Applications; 2013.

B. ASTM C578 - Standard Specification for Rigid, Cellular Polystyrene Thermal Insulation; 2016.

C. ASTM C612 - Standard Specification for Mineral Fiber Block and Board Thermal Insulation; 2014.

D. ASTM C665 - Standard Specification for Mineral-Fiber Blanket Thermal Insulation for Light Frame Construction and Manufactured Housing; 2012.

E. ASTM E84 - Standard Test Method for Surface Burning Characteristics of Building Materials; 2016.

1.04 SUBMITTALS

A. See Section 01 3000 - Administrative Requirements, for submittal procedures.

B. Product Data: Provide data on product characteristics, performance criteria, and product limitations.

C. ABAA Field Quality Control Submittals: Submit third-party reports of testing and inspection required by ABAA QAP.

D. Manufacturer's Certificate: Certify that products meet or exceed specified requirements.

E. Manufacturer's Installation Instructions: Include information on special environmental conditions required for installation and installation techniques.

F. ABAA Manufacturer Qualification: Submit documentation of current evaluation of proposed manufacturer and materials.

G. ABAA Installer Qualification: Submit documentation of current contractor accreditation and current installer certification. Keep copies of contractor accreditation and installer certification on site during and after installation. Present on-site documentation upon request.

1.05 QUALITY ASSURANCE

A. Air Barrier Association of America (ABAA) Quality Assurance Program (QAP); www.airbarrier.org/#sle:

1. Installer Qualification: Use accredited contractor, certified installers, evaluated materials, and third-party field quality control audit.
2. Manufacturer Qualification: Use evaluated materials from a single manufacturer regularly engaged in air barrier material manufacture. Use secondary materials approved in writing by primary material manufacturer.

1.06 FIELD CONDITIONS

A. Do not install insulation adhesives when temperature or weather conditions are detrimental to successful installation.

PART 2 PRODUCTS

2.01 APPLICATIONS

A. Insulation types are:
   1. Type 1 - Batt/blanket insulation - unfaced.
   2. Type 2 - Batt/blanket insulation with vapor barrier (NOT USED).
   3. Type 3 - Perimeter insulation - rigid.
   4. Type 4 - Cavity wall insulation - rigid.
   5. Type 4A - Cavity wall insulation - mineral fiber
   6. Type 5 - Acoustical insulation.
   7. Type 6 - Fire safing insulation.
   8. Type 7 - Spray polyurethane foam insulation.

B. Insulation Type 3 at Perimeter of Foundation: Extruded polystyrene board.

C. Insulation Type 7 inside Masonry Cavity Walls (Typical): Spray Polyurethane Foam, Refer to Section 07 2640.

D. Insulation Type 7 over sheathing and metal stud framed walls, continuous (Typical): Spray Polyurethane Foam, Refer to Section 07 2640.

E. Insulation Type 4A where indicated Exterior Walls: Mineral Fiber

F. Insulation Type 1 in Metal Framed Walls: Batt insulation with no vapor retarder.

G. Insulation Over Roof Deck: Polyisocyanurate board. Refer to Section 07 5300.

H. Acoustical Insulation Type 5 in sound rated partitions.

I. Fire safing insulation Type 6 at voids and penetrations of fire separations and smoke walls.
   1. For terminations of rated CMU partitions to deck above.

J. Ventilated composite roof insulation.
   1. Refer to Section 07 3113. For asphalt shingle steep sloped roofs.
   2. Refer to Section 07 6100. For sheet metal roofs.

2.02 FOAM BOARD INSULATION MATERIALS

A. Type 3 and Type 4: Extruded Polystyrene Board Insulation: Extruded polystyrene board; ASTM C578; with either natural skin or cut cell surfaces, and the following characteristics:
   1. Type: ASTM C578, Type VI.
   2. Flame Spread Index (FSI): Class A - 0 to 25, when tested in accordance with ASTM E84.
   3. Smoke Developed Index (SDI): 450 or less, when tested in accordance with ASTM E84.
   4. R-value; 1 inch of material at 72 degrees F: 5, minimum.
   5. Board Edges: Square.
   6. Water Absorption, Maximum: 0.3 percent, by volume.
   7. Manufacturers:
      a. Dow Chemical Company; STYROFOAM HIGHLOAD 40: www.dow.com/#sle.

b. Owens Corning Corporation; FOAMULAR Extruded Polystyrene (XPS) Insulation: www.ocbuildingspec.com/#sle.
c. Substitutions: See Section 01 6000 - Product Requirements.

2.03 FIBER BOARD INSULATION MATERIALS

A. Mineral Fiber Board Cavity Insulation Type 4A:
1. Manufacturer: Roxul CavityRock DD
2. Type: mineral wool fiber insulation board.
3. Edges: square.
4. Size: 16" x 48".
5. Thickness: as shown on drawings.
6. Thermal resistivity (r-value): 4.3 per inch thickness per ASTM C 518.
7. Water vapor permeance: 27.2 perm per ASTM E 96.
8. ASTM compliance: ASTM C 612 Type IVB.

B. Mineral Fiber Board Insulation Type 6: Rigid or semi-rigid mineral fiber, ASTM C612 or ASTM C553; unfaced flame spread index of 0 (zero) when tested in accordance with ASTM E84.
1. Smoke Developed Index: 450 or less, when tested in accordance with ASTM E84.
2. Manufacturers:
a. ROXUL, Inc; CURTAINROCK 80: www.roxul.com/#sle.
b. ROXUL, Inc; CURTAINROCK 40: www.roxul.com/#sle.
c. ROXUL, Inc; ROXUL SAFE 65: www.roxul.com/#sle.

2.04 BATT INSULATION MATERIALS

A. Type 1 and Type 5 Mineral Fiber Batt Insulation: Flexible or semi-rigid preformed batt or blanket, complying with ASTM C665; friction fit; unfaced flame spread index of 0 (zero) when tested in accordance with ASTM E84.
1. Smoke Developed Index: 0 (zero), when tested in accordance with ASTM E84.
2. Manufacturers:
a. Johns Manville; MinWool Sound Attenuation Fire Batts: www.jm.com/#sle.
b. Thermafiber, Inc; SAFB: www.thermafiber.com/#sle.
c. ROXUL, Inc; ROXUL AFB: www.roxul.com/#sle.

2.05 ACCESSORIES

A. Insulation Fasteners: Impaling clip of nylon with washer retainer and clips, to be adhered to surface to receive insulation, length to suit insulation thickness and substrate, capable of securely and rigidly fastening insulation in place.

B. Adhesive: Type recommended by insulation manufacturer for application.

PART 3 EXECUTION

3.01 EXAMINATION

A. Verify that substrate, adjacent materials, and insulation materials are dry and that substrates are ready to receive insulation.

B. Verify substrate surfaces are flat, free of irregularities or materials or substances that may impede adhesive bond.

3.02 BOARD INSTALLATION AT FOUNDATION PERIMETER

A. Install boards vertically and/or horizontally on foundation perimeter as shown.
1. Place boards to maximize adhesive contact.

2. Install in running bond pattern.
3. Butt edges and ends tightly to adjacent boards and to protrusions.

B. Cut and fit insulation tightly to protrusions or interruptions to the insulation plane.

3.03 BOARD INSTALLATION AT CAVITY WALLS

A. Install boards horizontally on walls.
1. Place boards to maximize adhesive contact.
2. Butt edges and ends tightly to adjacent boards and to protrusions.

B. Cut and fit insulation tightly to protrusions or interruptions to the insulation plane.

3.04 BATT INSTALLATION

A. Install insulation in accordance with manufacturer's instructions.

B. Install in exterior wall and roof spaces without gaps or voids. Do not compress insulation.

C. Trim insulation neatly to fit spaces. Insulate miscellaneous gaps and voids.

D. Fit insulation tightly in cavities and tightly to exterior side of mechanical and electrical services within the plane of the insulation.

3.05 FIELD QUALITY CONTROL

A. Coordination of Air Barrier Association of America (ABAA) Tests and Inspections:
1. Provide testing and inspection required by ABAA Quality Assurance Program (QAP).
2. Notify in ABAA writing of schedule for air barrier work, and allow adequate time for testing and inspection.
3. Cooperate with ABAA testing agency.
4. Allow access to air barrier work areas and staging.
5. Do not cover air barrier work until tested, inspected, and accepted.

3.06 PROTECTION

A. Do not permit installed insulation to be damaged prior to its concealment.

END OF SECTION

SECTION 07 2400
EXTERIOR INSULATION AND FINISH SYSTEMS

PART 1 GENERAL

1.01 SECTION INCLUDES

A. Soffit Vents and Control Joints.

B. Composite wall and soffit cladding of rigid insulation and reinforced finish coating over cementitious base coat ("Class PM").

1.02 RELATED REQUIREMENTS

A. Section 07 6200 - Sheet Metal Flashing and Trim: Perimeter flashings.

B. Section 07 9200 - Joint Sealants: Sealing joints between EIFS and adjacent construction and penetrations through EIFS.

C. Section 09 2116 - Gypsum Board Assemblies: Cement Board substrates.

1.03 REFERENCE STANDARDS

A. ASTM B117 - Standard Practice for Operating Salt Spray (Fog) Apparatus; 2016.

B. ASTM B221 - Standard Specification for Aluminum and Aluminum-Alloy Extruded Bars, Rods, Wire, Profiles, and Tubes; 2014.

C. ASTM B221M - Standard Specification for Aluminum and Aluminum-Alloy Extruded Bars, Rods, Wire, Profiles, and Tubes (Metric); 2013.

D. ASTM C150/C150M - Standard Specification for Portland Cement; 2015.

E. ASTM C1397 - Standard Practice for Application of Class PB Exterior Insulation and Finish Systems (EIFS) and EIFS with Drainage; 2013.

F. ASTM D968 - Standard Test Methods for Abrasion Resistance of Organic Coatings by Falling Abrasive; 2015.

G. ASTM D2247 - Standard Practice for Testing Water Resistance of Coatings in 100% Relative Humidity; 2015.

H. ASTM D3273 - Standard Test Method for Resistance to Growth of Mold on the Surface of Interior Coatings in an Environmental Chamber; 2016.

I. ASTM E331 - Standard Test Method for Water Penetration of Exterior Windows, Skylights, Doors, and Curtain Walls by Uniform Static Air Pressure Difference; 2000 (Reapproved 2016).

J. ASTM G153 - Standard Practice for Operating Enclosed Carbon Arc Light Apparatus for Exposure of Nonmetallic Materials; 2013.

K. ASTM G155 - Standard Practice for Operating Xenon Arc Light Apparatus for Exposure of Nonmetallic Materials; 2013.

L. ICC-ES AC219 - Acceptance Criteria for Exterior Insulation and Finish Systems; 2009.

M. ICC-ES AC235 - Acceptance Criteria for EIFS Clad Drainage Wall Assemblies; 2004 (Editorially revised 2009).

N. NFPA 268 - Standard Test Method for Determining Ignitibility of Exterior Wall Assemblies Using a Radiant Heat Energy Source; 2012.

O. NFPA 285 - Standard Fire Test Method for Evaluation of Fire Propagation Characteristics of Exterior Non-Load-Bearing Wall Assemblies Containing Combustible Components; 2012.

1.04 SUBMITTALS

A. Product Data: Provide data on system materials, product characteristics, performance criteria, and system limitations.

B. Selection Samples: Submit manufacturer's standard range of samples illustrating available coating colors and textures.

C. Verification Samples: Submit actual samples of selected coating on specified substrate, minimum 12 inches square, illustrating project colors and textures.

D. Manufacturer's Installation Instructions: Indicate preparation required, installation techniques, and jointing requirements.

1.05 QUALITY ASSURANCE

A. Maintain copy of specified installation standard and manufacturer's installation instructions at project site during installation.

B. EIFS Manufacturer Qualifications: Provide EIFS products other than insulation from the same manufacturer with qualifications as follows:

1. Manufacturer of EIFS products for not less than 5 years.

C. Installer Qualifications: Company specializing in the type of work specified and with at least three years of documented experience and approved by manufacturer.

1.06 DELIVERY, STORAGE, AND HANDLING

A. Delivery: Deliver materials to project site in manufacturer's original, unopened containers with labels intact. Inspect materials and notify manufacturer of any discrepancies.

B. Storage: Store materials as directed by manufacturer's written instructions.

1.07 FIELD CONDITIONS

A. Do not prepare materials or apply EIFS under conditions other than those described in the manufacturer's written instructions.

B. Do not prepare materials or apply EIFS during inclement weather unless areas of installation are protected. Protect installed EIFS areas from inclement weather until dry.

C. Do not install coatings or sealants when ambient temperature is below 40 degrees F.

D. Do not leave installed insulation board exposed to sunlight for extended periods of time.

1.08 WARRANTY

A. See Section 01 7800 - Closeout Submittals, for additional warranty requirements.

B. Provide manufacturer's standard material warranty, covering a period of not less than 5 years.

PART 2 PRODUCTS

2.01 MANUFACTURERS

A. Manufacturers:

1. Basis of Design: Dryvit Systems, Inc; Dryvit Textured Acrylic Finish System (TAFS) Option 2; www.dryvit.com.

2.02 EXTERIOR INSULATION AND FINISH SYSTEM

A. Exterior Insulation and Finish System: Base coat, reinforcing mesh, acrylic primer and acrylic finish coating on flat-backed insulation board adhesive-applied directly to water-resistive coating substrate; provide a complete system that has been tested to show compliance with the following characteristics; include all components of specified system and substrate(s) in tested samples.

B. Fire Characteristics:
   1. Flammability: Pass, when tested in accordance with NFPA 285.
   2. Ignitibility: No sustained flaming when tested in accordance with NFPA 268.

C. Water Penetration Resistance: No water penetration beyond the plane of the base coat/insulation board interface after 15 minutes, when tested in accordance with ASTM E331 at 6.24 psf differential pressure with tracer dye in the water spray; include in tested sample at least two vertical joints and one horizontal joint of same type to be used in construction; disassemble sample if necessary to determine extent of water penetration.

D. Salt Spray Resistance: No cracking, checking, crazing, erosion, blistering, peeling, delamination, or corrosion of finish coating after 300 hours exposure in accordance with ASTM B117, using at least three samples matching intended assembly, at least 4 by 6 inches in size.

E. Freeze-Thaw Resistance: No cracking, checking, crazing, erosion, blistering, peeling, delamination, or corrosion of finish coating when viewed under 5x magnification after 10 cycles, when tested in accordance with ICC-ES AC219 or ICC-ES AC235.

F. Weathering Resistance: No cracking, checking, crazing, erosion, blistering, peeling, delamination, or corrosion of finish coating when viewed under 5x magnification after 2000 hours of accelerated weathering conducted in accordance with ASTM G153 Cycle 1 or ASTM G155 Cycle 1, 5, or 9.

G. Water Degradation Resistance: No cracking, checking, crazing, erosion, blistering, peeling, delamination, or corrosion of finish coating after 14 days exposure, when tested in accordance with ASTM D2247.

H. Mildew Resistance: No growth supported on finish coating during 28 day exposure period, when tested in accordance with ASTM D3273.

I. Abrasion Resistance Of Finish: No cracking, checking or loss of film integrity when tested in accordance with ASTM D968 with 113.5 gallons of sand.

2.03 MATERIALS

A. Finish Coating Top Coat: Water-based, air curing, acrylic or polymer-based finish with integral color and texture.
   1. Texture: Dryvit Systems, Inc, Standard Textures, with Dirt Pickup Resistance; Sandpebble Fine DPR; www.dryvit.com/#sle.

B. Primer
   1. Color Prime: Pigmented, acrylic based primer used to improve adhesion and uniformity of finish color.

C. Base Coat: Polymer-modified, fiber reinforced Portland cement coating.
   1. Portland Cement: ASTM C150/C150M, Type I or II.
   2. Base Coat Thickness: 1/4 inch, minimum.
   3. Manufacturers:
      a. Dryvit Primus or Genesis.
      b. Substitutions: See Section 01 6000 - Product Requirements.

D. Reinforcing Mesh: Balanced, open weave glass fiber fabric, treated for compatibility and improved bond with coating, weight, strength, and number of layers as required to meet required system impact rating.

2.04 ACCESSORY MATERIALS

A. Metal Flashings: As specified in Section 07 6200.

B. Trim: EIFS manufacturer's standard PVC or galvanized steel trim accessories, as required for a complete project and including starter track and drainage accessories.

C. Sealant Materials: Compatible with EIFS materials and as recommended by EIFS manufacturer.

D. Exterior Soffit Vents: One piece, perforated, ASTM B221 (ASTM B221M), 6063 alloy, T5 temper, aluminum, with plaster or EIFS edge and manufactured especially for soffit application. Provide continuous vent.
   1. Size: 3"
   2. Fry Reglet Model DRM-625-V-300.
   3. Substitutions: See Section 01 6000 - Product Requirements.

PART 3 EXECUTION

3.01 GENERAL

A. Install in accordance with EIFS manufacturer's instructions and ASTM C1397.

B. Where different requirements appear in either document, comply with the most stringent.

C. Neither of these documents supercedes the provisions of the Contract Documents that define the contractual relationships between the parties or the scope of work.

3.02 EXAMINATION

A. Verify that substrate is sound and free of oil, dirt, other surface contaminants, efflorescence, loose materials, or protrusions that could interfere with EIFS installation and is of a type and construction that is acceptable to EIFS manufacturer. Do not begin work until substrate and adjacent materials are complete and thoroughly dry.

B. Verify that substrate surface is flat, with no deviation greater than 1/4 in when tested with a 10 ft straightedge.

3.03 INSTALLATION - WATER-RESISTIVE BARRIER

A. Apply barrier coating as recommended by coating manufacturer; prime substrate as required before application.

B. Seal substrate transitions and intersections with other materials to form continuous water-resistive barrier on exterior of sheathing, using method recommended by manufacturer.

C. At door and window rough openings and other wall penetrations, seal water-resistive barrier and flexible flashings to rough opening before installation of metal flashings, sills, or frames, using method recommended by manufacturer.

D. Lap flexible flashing or flashing tape at least 2 inches on each side of joint or transition.

E. Exterior Soffit Vents: Install according to manufacturer's written instructions and in locations indicated on the drawings. Provide vent area indicated on drawings.

3.04 INSTALLATION - FINISH

A. Joints: Install control joints at spacings indicated on the drawings. Do not exceed 400 sq ft for areas defined by the placement of control joints.

B. Base Coat: Apply in thickness as necessary to fully embed reinforcing mesh, wrinkle free, including back-wrap at terminations of EIFS. Install reinforcing fabric as recommended by EIFS manufacturer.
   1. Lap reinforcing mesh edges and ends a minimum of 2-1/2 inches.
   2. Allow base coat to dry a minimum of 24 hours before next coating application.

C. Apply primer and finish coat after base coat has dried not less than 24 hours, embed finish aggregate, and finish to a uniform texture and color.

D. Finish Coat Thickness: As recommended by manufacturer.

E. Seal control and expansion joints within the field of exterior finish and insulation system, using procedures recommended by sealant and finish system manufacturers.

3.05 CLEANING

A. Clean EIFS surfaces and work areas of foreign materials resulting from EIFS operations.

3.06 PROTECTION

A. Protect completed work from damage and soiling by subsequent work.

END OF SECTION

SECTION 07 2500
WEATHER BARRIERS

PART 1 GENERAL

1.01 SECTION INCLUDES

A. Water-Resistive Barrier: Under exterior wall cladding, over sheathing or other substrate.

B. Vapor Retarders: Materials to make exterior walls, joints between exterior walls and roof, joints around frames of openings in exterior walls, and roof assemblies water vapor resistant and air tight.

C. Air Barriers: Materials that form a system to stop passage of air and water vapor through exterior walls, joints between exterior walls and roof, joints around frames of openings in exterior walls, and roof assemblies.

1.02 RELATED REQUIREMENTS

A. Section 072616- Underslab VaporBarrier.

B. Section 07 2640 - Spray Polyurethane Foam Insulating Air Barrier: Insulation and air barrier in exterior walls.

C. Section 076200 - Sheet Metal Flashing and Trim: Membrane flashings installed in conjunction with weather barriers.

1.03 DEFINITIONS

A. Weather Barrier: Assemblies that form either water-resistive barriers, air barriers, or vapor retarders.

B. Air Barrier: Air tight barrier made of material that is relatively air impermeable but water vapor permeable, both to the degree specified, with sealed seams and with sealed joints to adjacent surfaces. Note: For the purposes of this specification, vapor impermeable air barriers are classified as vapor retarders.

C. Vapor Retarder: Air tight barrier made of material that is relatively water vapor impermeable, to the degree specified, with sealed seams and with sealed joints to adjacent surfaces.

1. Water Vapor Permeance: For purposes of conversion, 57.2 ng/(Pa s sq m) = 1 perm.

D. Water-Resistive Barrier: Water-shedding barrier made of material that is moisture-resistant, to the degree specified, intended to be installed to shed water, with sealed seams.

1.04 REFERENCE STANDARDS

A. AATCC Test Method 127 - Water Resistance: Hydrostatic Pressure Test; 2014.

B. ASTM D1970/D1970M - Standard Specification for Self-Adhering Polymer Modified Bituminous Sheet Materials Used as Steep Roofing Underlayment for Ice Dam Protection; 2013.

C. ASTM E84 - Standard Test Method for Surface Burning Characteristics of Building Materials; 2016.

D. ASTM E96/E96M - Standard Test Methods for Water Vapor Transmission of Materials; 2014.

E. ASTM E2178 - Standard Test Method for Air Permeance of Building Materials; 2013.

F. ICC-ES AC38 - Acceptance Criteria for Water-Resistive Barriers; ICC Evaluation Service, Inc; 2013.

1.05 SUBMITTALS

A. See Section 01 3000 - Administrative Requirements, for submittal procedures.

B. Product Data: Provide data on material characteristics.

C. ABAA Field Quality Control Submittals: Submit third-party reports of testing and inspection required by ABAA QAP.

D. Manufacturer's Installation Instructions: Indicate preparation, installation methods, and storage and handling criteria.

E. ABAA Manufacturer Qualification: Submit documentation of current evaluation of proposed manufacturer and materials.

F. ABAA Installer Qualification: Submit documentation of current contractor accreditation and current installer certification. Keep copies of all contractor accreditation and installer certification on site during and after installation. Present on-site documentation upon request.

1.06 QUALITY ASSURANCE

A. Air Barrier Association of America (ABAA) Quality Assurance Program (QAP); www.airbarrier.org/#sle:
   1. Installer Qualification: Use accredited contractor, certified installers, evaluated materials, and third-party field quality control audit.
   2. Manufacturer Qualification: Use evaluated materials from a single manufacturer regularly engaged in air barrier material manufacture. Use secondary materials approved in writing by primary material manufacturer.

1.07 FIELD CONDITIONS

A. Maintain temperature and humidity recommended by the materials manufacturers before, during and after installation.

PART 2 PRODUCTS

2.01 WEATHER BARRIER ASSEMBLIES

A. Water-Resistive Barrier: Provide on exterior walls under exterior cladding.
   1. Use water-resistive barrier sheet, mechanically fastened unless otherwise indicated.

B. Air Barrier:
   1. On outside surface of gypsum sheathing of exterior walls where Spray Polyurethane Foam Insulating Air Barrier is not indicated, use air barrier sheet, self-adhesive type.
   2. On outside surface of roof decking under mineral fiber insulation at mansards, use vapor retarder sheet, self-adhesive type.

2.02 WATER-RESISTIVE BARRIER MATERIALS

A. Water-Resistive Barrier Sheet, Mechanically Fastened:
   1. Air Permeance: 0.004 cubic feet per minute per square foot, maximum, when tested in accordance with ASTM E2178.
   2. Water Vapor Permeance: 5 perms, minimum, when tested in accordance with ASTM E96/E96M Procedure A (desiccant procedure).
   3. Water Penetration Resistance: Withstand a water head of 21 inches, minimum, for minimum of 5 hours, when tested in accordance with AATCC Test Method 127.
   4. Ultraviolet and Weathering Resistance: Approved in writing by manufacturer for minimum of 180 days weather exposure.
   5. Surface Burning Characteristics: Flame spread index of 25 or less, and smoke developed index of 50 or less, when tested in accordance with ASTM E84.
   6. Water Resistance: Comply with applicable water-resistive requirements of ICC-ES AC38.

7. Products:
    a. DuPont Building Innovations; Tyvek Commercial Wrap D with FlexWrap NF, StraightFlash, StraightFlash VF, and Tyvek Tape: www.dupont.com.
    b. HardieWrap, HardieWrap Seam Tape, HardieWrap Flex Flashing: www.jameshardie.com..
    c. Substitutions: See Section 01 6000 - Product Requirements.

2.03 AIR BARRIER MATERIALS (AIR BARRIER, VAPOR PERMEABLE, AND WATER-RESISTIVE)

A. Air Barrier Sheet (Walls): ASTM D1970.
1. Type: Self-adhered vapor permeable, water resistive air barrier consisting of a reinforced, modified polyolefin tri-laminate film surface and patented permeable adhesive technology with split-back poly-release film.
2. Thickness: 23 mil, nominal.
3. Water Vapor Permeance: 29 perm, maximum, when tested in accordance with ASTM E96/E96M.
4. Air Permeance: Pass (0.02 L/s/sq m), maximum, when tested in accordance with ASTM E2178.
5. Products:
    a. Henry Company; Blueskin VP 160: www.henry.com/sle..
    b. Substitutions: See Section 01 6000 - Product Requirements.

2.04 AIR BARRIER MATERIALS (AIR BARRIER, VAPOR RETARDER, AND WATER-RESISTIVE)

A. Air Barrier Sheet (Roofs): ASTM D1970.
1. Type: Modified bitumen membrane reinforced with skid-resistant polyethylene film, self-adhesive.
2. Thickness: 40 mil (0.040 inch), nominal.
3. Water Vapor Permeance: 0.05 perm, maximum, when tested in accordance with ASTM E96/E96M.
4. Air Permeance: 0.004 cubic feet per minute per square foot (0.02 L/s/sq m), maximum, when tested in accordance with ASTM E2178.
5. Products:
    a. Henry Company; Blueskin RF200: www.henry.com.
    b. Substitutions: See Section 01 6000 - Product Requirements.

2.05 SEALANTS

A. Primers, Cleaners, and Other Sealant Materials: As recommended by sealant manufacturer, appropriate to application, and compatible with adjacent materials.

2.06 ADHESIVES

A. Mastic Adhesive : Compatible with sheet seal and substrate, thick mastic of uniform knife grade consistency .

2.07 ACCESSORIES

A. Sealants, Tapes, and Accessories for Sealing Weather Barrier and Sealing Weather Barrier to Adjacent Substrates: As specified or as recommended by weather barrier manufacturer.

B. Flexible Flashing: Self-adhesive sheet flashing complying with ASTM D1970/D1970M, except slip resistance requirement is waived if not installed on a roof.

C. Pre-formed Transition Membrane: Semi-rigid silicone composition, tapered edges, tear resistant.

D. Thinners and Cleaners: As recommended by material manufacturer.

PART 3 EXECUTION

3.01 EXAMINATION

A. Verify that surfaces and conditions are ready to accept the work of this section.

3.02 PREPARATION

A. Remove projections, protruding fasteners, and loose or foreign matter that might interfere with proper installation.

B. Clean and prime substrate surfaces to receive adhesives and sealants in accordance with manufacturer's instructions.

3.03 INSTALLATION

A. Install materials in accordance with manufacturer's instructions.

B. Water-Resistive Barriers: Install continuous barrier over surfaces indicated, with sheets lapped to shed water and with sealed seams and with sealed joints to adjacent surfaces.

C. Air Barriers: Install continuous air tight barrier over surfaces indicated, with sealed seams and with sealed joints to adjacent surfaces.

D. Vapor Retarders: Install continuous air tight barrier over surfaces indicated, with sealed seams and with sealed joints to adjacent surfaces.

E. Apply sealants and adhesives within recommended application temperature ranges. Consult manufacturer if temperature is out of this range.

F. Mechanically Fastened Sheets - On Exterior:
   1. Install sheets shingle-fashion to shed water, with seams generally horizontal.
   2. Overlap seams as recommended by manufacturer but at least 6 inches.
   3. Overlap at outside and inside corners as recommended by manufacturer but at least 12 inches.
   4. Attach to framed construction with fasteners extending through sheathing into framing. Space fasteners at 12 to 18 inches on center along each framing member supporting sheathing.
   5. For applications specified to be air tight, seal seams, laps, penetrations, tears, and cuts with self-adhesive tape.
   6. Install air barrier and vapor retarder UNDER jamb flashings.
   7. Install head flashings under weather barrier.
   8. At openings to be filled with frames having nailing flanges, wrap excess sheet into opening; at head, seal sheet over flange and flashing.

G. Self-Adhesive Sheets:
   1. Prepare substrate in manner recommended by sheet manufacturer; fill and tape joints in substrate and between dissimilar materials.
   2. Lap sheets shingle-fashion to shed water and seal laps air tight.
   3. Once sheets are in place, press firmly into substrate with resilient hand roller; ensure that all laps are firmly adhered with no gaps or fishmouths.
   4. Use same material, or other material approved by sheet manufacturer for the purpose, to seal to adjacent construction and as flashing.
   5. At wide joints, provide extra flexible membrane allowing joint movement.

H. Openings and Penetrations in Exterior Weather Barriers:
   1. Install flashing over sills, covering entire sill frame member, extending at least 5 inches onto weather barrier and at least 6 inches up jambs; mechanically fasten stretched edges.
   2. At openings to be filled with frames having nailing flanges, seal head and jamb flanges using a continuous bead of sealant compressed by flange and cover flanges with at least 4 inches wide; do not seal sill flange.
   3. At openings to be filled with non-flanged frames, seal weather barrier to all sides of opening framing, using flashing at least 9 inches wide, covering entire depth of framing.
   4. At head of openings, install flashing under weather barrier extending at least 2 inches beyond face of jambs; seal weather barrier to flashing.
   5. At interior face of openings, seal gap between window/door frame and rough framing, using joint sealant over backer rod.
   6. Service and Other Penetrations: Form flashing around penetrating item and seal to weather barrier surface.

3.04 FIELD QUALITY CONTROL

A. See Section 01 4000 - Quality Requirements, for additional requirements.

B. Coordination of ABAA Tests and Inspections:
   1. Provide testing and inspection required by ABAA QAP.
   2. Notify in ABAA writing of schedule for air barrier work. Allow adequate time for testing and inspection.
   3. Cooperate with ABAA testing agency.
   4. Allow access to air barrier work areas and staging.
   5. Do not cover air barrier work until tested, inspected, and accepted.

C. Do n ot cover installed weather barriers until required inspections have been completed.

D. Obtain approval of installation procedures by the weather barrier manufacturer based on a mock-up installed in place, prior to proceeding with remainder of installation.

3.05 PROTECTION

A. Do not leave materials exposed to weather longer than recommended by manufacturer.

END OF SECTION

SECTION 07 2616
UNDER-SLAB VAPOR BARRIER/RETARDER

PART 1 - GENERAL

1.01 SECTION INCLUDES

A. Vapor Barrier, seam tape, mastic, pipe boots, detail strip for installation under concrete slabs.

1.02 RELATED SECTIONS

A. Section 03 3000 Cast-in-Place Concrete

1.03 REFERENCES

A. American Society for Testing and Materials (ASTM)
1. ASTM E 1745-97(2004) Standard Specification for Plastic Water Vapor Retarders Used in Contact with Soil or Granular Fill Under Concrete Slabs
2. ASTM E 154-99(2005) Standard Test Methods for Water Vapor Retarders Used in Contact with Earth Under Concrete Slabs
3. ASTM E 96-05 Standard Test Methods for Water Vapor Transmission of Materials
4. ASTM E 1643-98(2005) Standard Practice for Installation of Water Vapor Retarders Used in Contact with Earth or Granular Fill Under Concrete Slabs

1.04 SUBMITTALS

A. Quality Control / Assurance
1. Independent laboratory test results showing compliance with ASTM & ACI Standards.
2. Manufacturer's samples, literature
3. Manufacturer's installation instructions for placement, seaming and pipe boot installation

PART 2 - PRODUCTS

2.01 MATERIALS

A. Vapor Barrier
1. Vapor Barrier must have the following qualities
a. Perm rating less than or equal to 0.01 perms (grains/(ft2 *hr * in. Hg)) after conditioning as tested by:
1) ASTM E 96
2) ASTM E 1745 Class A (Plastics), paragraph 7.1.2-5.

B. Vapor Barrier Products: 15 mil plastic sheet - single ply vapor barrier.
1. Stego Wrap (15 mil) Vapor Barrier by STEGO INDUSTRIES LLC, San Clemente, CA (877) 464-7834 www.stegoindustries.com
2. Griffolyn 15 mil Green Vapor Barrier by Reef Industries, Inc.
3. VaporBlock 15 by Raven Industries, Inc.
4. ACCESSORIES
a. Seam Tape
1) Tape must have the following qualities:
(a) Water Vapor Transmission Rate ASTM E 96: 0.3 perms or lower
b. Vapor Proofing Mastic
1) Mastic must have the following qualities:
(a) Water Vapor Transmission Rate ASTM E 96: 0.3 perms or lower
c. Pipe Boots

1) Provide manufacturer's supplied pipe boot system or construct pipe boots from vapor barrier material, pressure sensitive tape and/or mastic per manufacturer's instructions.

PART 3 - EXECUTION

3.01 PREPARATION

A. Ensure that subsoil is approved by architect or geotechnical firm
   1. Level and tamp or roll aggregate, sand or tamped earth base.

3.02 INSTALLATION

A. Install Vapor Barrier/Retarder:
   1. Installation shall be in accordance with manufacturer's instructions and ASTM E 1643.

B. Unroll Vapor Barrier/Retarder with the longest dimension parallel with the direction of the pour.

C. Lap Vapor Barrier/Retarder over footings and seal to foundation walls.

D. Overlap joints 6 inches and seal with manufacturer's tape.

E. Seal all penetrations (including pipes) per manufacturer's instructions.

F. No penetration of the Vapor Barrier/Retarder is allowed except for reinforcing steel and permanent utilities.

G. Repair damaged areas by cutting patches of Vapor Barrier/Retarder, overlapping damaged area 6 inches and taping all four sides with tape.

END OF SECTION

SECTION 07 2640

SPRAY POLYURETHANE FOAM INSULATING AIR BARRIER

PART 1 - GENERAL

1.01 SECTION INCLUDES

A. This section includes the following:
   1. Materials and installation to bridge and seal the following air leakage pathways and gaps:
      a. Connections of the walls to the roof air barrier.
      b. Connections of the walls to the foundations.
      c. Openings and penetrations of window frames.
      d. Barrier envelope systems.
      e. Door frames.
      f. Piping, conduit, duct and similar penetrations
      g. Masonry ties, screws, bolts and similar penetrations.
      h. All other air leakage pathways in the building envelope.

1.02 PRODUCTS INSTALLED BUT NOT SUPPLIED UNDER THIS SECTION

A. Sheet metal flashings to be built into masonry are furnished under Section 07 62 00.

1.03 RELATED SECTIONS

A. Section 04 2000 - Unit Masonry:

B. Section 07 2100 - Building Insulation.

C. Section 07 9200 - Joint Sealants: Joint sealant materials and installation.

D. Section 08 11 13- Door frames.

E. Section 08 51 13 - Aluminum Windows

F. Section 08 43 13 Aluminum storefronts and entrances

G. Section 08 44 13 - Glazed Aluminum Curtain Walls

1.04 PERFORMANCE REQUIREMENTS

A. Provide air/vapor barrier system constructed to perform as follows:
   1. A continuous air/vapor barrier system.
   2. Building thermal insulation.

B. System shall accommodate movements of building materials by providing expansion and control joints as required, with accessory air seal materials at such locations, changes in substrate and perimeter conditions.

C. Maximum Permissible Air Leakage Rates cfm/sf @ 0.3" w.g. (l/s.m2 @ 75 Pa)
   1. 0.02 (0.1)

1.05 SUBMITTALS

A. Provide submittals in accordance with Section 01 3000.

B. Submit shop drawings showing locations and extent of air/vapor barrier and details of all typical conditions, intersections with other envelope systems and materials, membrane flashings and counter-flashings, and details showing how gaps in the construction will be bridged, how inside and outside corners are negotiated and how miscellaneous penetrations such as conduits, pipes electric boxes and the like are sealed.

C. Submit manufacturer's product data sheets for each type of material, including manufacturer's printed instructions for evaluating, preparing, and treating substrate, temperature and other

limitations of installation conditions, technical data, and tested physical and performance properties.

D. Submit manufacturer's installation instructions.

E. Provide evidence of testing by an accredited laboratory confirming material has been tested and conforms to the requirements of ASTM E2178, Standard for Air Barrier Materials.

F. Certification by air/vapor barrier manufacturer that products supplied comply with local regulations controlling use of volatile organic compounds (VOCs).

G. Certification of compatibility by air/vapor barrier manufacturer, listing all materials on the project that it connects to or that come in contact with it.

H. Submit two samples, 12 by 12 inch (300 by 300 mm) minimum size, of each air/vapor barrier material required for Project.

I. Submit test results of air permeability testing of primary air barrier material (ASTM E 2178-01).

J. Provide evidence of testing by an accredited laboratory confirming material has been tested and conforms to the requirements of ASTM E2357, Standard Test Method for Determining Air Leakage of Air Barrier Assemblies: Pass.

K. Provide evidence of testing by an accredited laboratory confirming material has been tested and conforms to the requirements of NFPA 285: Pass.

L. Quality Assurance Program: Submit evidence of current accreditation and certification under the Air Barrier Association of America's (ABAA) Quality Assurance Program. Submit accreditation number of manufacturer and certification number of installers at time of submittal.

1.06 QUALITY ASSURANCE

A. Installer Qualifications:
   1. Each worker who is installing air barriers must be either a Certified Applicator or an installer who is registered with ABAA
   2. Each Lead Certified Applicator can supervise a maximum of five registered installers. The Certified Applicator shall be thoroughly trained and experienced in the installation of air barriers of the types being applied. Lead Certified Applicators shall perform or directly supervise all air/vapor barrier work on the project.
   3. Installers shall also be certified by ABAA/NECA (National Energy Conservation Association) and PSDI (Professional Skills Development Institute for energy conservation) and SPFA (Spray Polyurethane Foam Alliance as foam mechanics). Installers shall have their photo-identification certification cards in their possession and available on the project site, for inspection upon request.
   4. Provide products that comply with all state and local regulations controlling use of volatile organic compounds (VOCs).
   5. Preconstruction Meeting: Convene one week prior to commencing Work of this section, in accordance with Section 01 20 00 - Project Meetings.
   6. Field-Constructed Mock-Ups: Prior to installation of air/vapor barrier, apply air/vapor barrier as follows to verify details under shop drawing submittals and to demonstrate tie-ins with adjoining construction, and other termination conditions, as well as qualities of materials and execution:
      a. Apply air/vapor barrier in field-constructed mock-ups of assemblies specified in Section 04 2000.

7. Cooperate and coordinate with the Owner's inspection and testing agency if required. Do not cover any installed air and vapor barrier unless it has been inspected, tested and approved per requirements.
8. Protect people and materials from over-spray and contact with chemicals and gases.

1.07 FIELD QUALITY ASSURANCE

A. Implement the ABAA Quality Assurance Program requirements. Cooperate with ABAA inspectors and independent testing and inspection agencies engaged by the Owner. Do not cover air barrier until it has been inspected, tested, and accepted.

1.08 DELIVERY, STORAGE, AND HANDLING

A. Deliver materials to Project site in original packages with seals unbroken, labeled with manufacturer's name, product, date of manufacture, expiration date, and directions for storage.

B. Store materials in their original undamaged packages in a clean, dry, protected location and within temperature range required by air/vapor barrier manufacturer. Protect stored materials from direct sunlight.

C. Avoid spillage. Immediately notify Owner, Architect if spillage occurs and start clean up procedures.

D. Clean spills and leave area as it was prior to spill.

1.09 WASTE MANAGEMENT AND DISPOSAL

A. Place materials defined as hazardous or toxic waste in designated containers.

B. Ensure emptied containers are sealed and stored safely for disposal away from children.

1.10 PROJECT CONDITIONS

A. Environmental Conditions: Apply air/vapor barrier within range of ambient and substrate temperatures recommended by air/vapor barrier manufacturer. Do not apply air/vapor barrier to a damp or wet substrate, unless the manufacturer specifically permits that for the product.
   1. Do not apply air/vapor barrier in snow, rain, fog, or mist.
   2. Do not apply air/vapor barrier when the temperature of substrate surfaces and surrounding air temperatures are below those recommended by the manufacturer.
   3. The product shall not be installed after the expiry date printed on the label of each container. The product has a shelf life of 6 months from the date of manufacture.

1.11 WARRANTY

A. System Warranty: Provide the manufacturer's three year system warranty, including the primary air/vapor barrier and installed accessory sealant and membrane materials which fail to achieve air tight and watertight seal, exhibit loss of adhesion or cohesion, or do not cure.

PART 2 - PRODUCTS

2.01 MATERIALS & MANUFACTURERS

A. Sprayed polyurethane foam material, when tested, shall meet the requirements of ULC S705.1-01 Standard for Thermal Insulation-Spray Applied Rigid Polyurethane Foam, Medium Density, Material- Specification.

B. A copy of an Evaluation Report (such as the CCMC Evaluation Report) or copies of the test reports from an accredited testing laboratory, for each physical property, indicating that the product meets the requirements of ULC S705.1-01 shall be made available upon request.

C. Material containers shall be labeled with the Evaluation Report number of the evaluation agency.

D. Design R-value as indicated in test report; minimum R6.9/inch.

E. Density as indicated in test report: minimum 1.7 pounds per cubic foot.

F. Smoke development as indicated in test report; less than 500 when tested under ULC S102.

G. Products that meet the preceding requirements:
   1. Basis-of-design product: Walltite closed cell spray foam polyurethane air/vapor barrier as manufactured by BASF (215-966-1168).

H. Other Manufacturers: Provide either the product identified as "Basis of Design" or an equivalent product of another manufacturer with approved submittal meeting the design criteria:
   1. Icynene: www.icynene.com

I. Substitutions: See Section 01 6000 - Product Requirements.
   1. For any product not identified as "Basis of Design", submit information as specified for substitutions.

2.02 AUXILIARY MATERIALS

A. Furnish auxiliary materials recommended by air/vapor barrier manufacturer for intended use and compatible with the air/vapor barrier.

B. Transition Membrane: Self-adhering, smooth surfaced SBS modified bitumen membrane, nominal 40 mil thickness, width as required, to detail all rough openings, changes in material substrates, and penetrations.
   1. Blueskin SA as manufactured by Henry Company Inc
   2. Butyl-based peel and stick membrane: Transition between air/vapor barrier membrane and TPO or EPDM membranes:
      a. Blueskin SA as manufactured by Henry Company Inc.
   3. Primer: Water based liquid primer for concrete, masonry, gypsum sheathing, wood, metal, and painted substrates;
      a. Aquatac as manufactured by Henry Company Inc.
   4. Mastic, Adhesives, and Tape: Liquid mastic and adhesives, and adhesive tapes approved by foamed in place air/vapor barrier manufacturer.
   5. Sheet Membrane Transition Strip Termination Sealant:
      a. BES 925 Sealant by Henry Company Inc.
   6. Sheet Membrane Sheet Membrane Air Barrier Perimeter Seal to Windows, Doors: Low modulus silicone sheet; provide manufacturer's standard system consisting of precured low-modulus silicone extrusion, in sizes to fit widths indicated, combined with a neutral-curing low modulus silicone sealant for bonding extrusions to substrates.
      a. Pecora Sil-Span.
      b. Dow 1-2-3 or equal.
   7. Provide sealants in accordance with Section 07 92 00 - Joint Sealants. Comply with ASTM C920 and ASTM C920 classifications for type, grade, class, and uses.
      a. Silicone Sealant: natural cure, low modulus, to seal sheet membrane flashing to polyethylene face of sheet rubberized-asphalt barrier and to seal between and to non-bituminous sheet systems.
         1) Acceptable materials:
            (a) Dow 790
            (b) Pecora 864
      b. SPF (Sprayed Polyurethane Foam) Sealant: Provide one- or two-component, foamed-in-place, polyurethane foam sealant with the following characteristics:

1) Density: 1.5 to 2.0 PCF.
2) Flame Spread (ASTM E162): 25 or less.
3) Initial R-Value (at 1 inch): Not less than 7.
4) Acceptable materials:
   (a) Zerodraft Foam Sealant.
   (b) Zerodraft Insulating Air Sealant
   Zerodraft (Division of Canam Building Envelope Specialists Inc.), 125 Traders Blvd. E., Unit # 4, Mississauga, ON, L4Z 2H3 Tel. 1-877-272-2626

c. Substrate Cleaner: Non-corrosive compatible with adjacent materials.

C. Intumescent Coating
1. International Fireproof Technology Inc. DC-315: water-based, intumescent paint, conforming to the following:
   a. Product shall pass full scale fire resistance test with spray foam insulating air barrier in accordance with NFPA 286: 24 wet mils (thermal barrier).
   b. Finish: flat, grey color
   c. VOC Content: 47 g/L
   d. Volume Solids: 67%
   e. Flash Point: none
   f. Mechanism of cure: coalescence
   g. Reducer/cleaner: water

2.03 EQUIPMENT

A. The equipment used to spray the polyurethane foam material shall be in accordance with ULC S705.2-02 and the equipment manufacturer's recommendations for specific type of application.

B. Equipment settings are to be recorded on the Daily Work Record as required by the ULC S705.2-02 Installation standard.

C. Each proportioner unit to supply only one spray gun.

PART 3 EXECUTION

3.01 EXAMINATION

A. Examine substrates, areas, and conditions under which air/vapor barrier systems will be applied, with Installer present, for compliance with requirements. Verify that surfaces and conditions are suitable prior to commencing work of this section. Do not proceed with installation until unsatisfactory conditions have been corrected.
1. Ensure that:
   a. surfaces are sound, dry, even, and free of oil, grease, dirt, excess mortar or other contaminants
   b. concrete surfaces are cured and dry, smooth without large voids, spalled areas or sharp protrusions.
   c. masonry joints are flush and completely filled with mortar, and all excess mortar sitting on masonry ties has been removed.
   d. Verify substrate is visibly dry and free of moisture. Test for capillary moisture by plastic sheet method according to ASTM D4263.
   e. Notify Architect in writing of anticipated problems using air/vapor barrier over substrate.

3.02 SURFACE PREPARATION

A. Clean, prepare, and treat substrate according to manufacturer's written instructions. Provide clean, dust-free, and dry substrate for air/vapor barrier application.

B. Prime ICBP metal substrates with conditioning primer when installing modified asphalt membrane transition membranes.

C. Prepare, treat, and seal vertical and horizontal surfaces at terminations and penetrations through air/vapor barrier and at protrusions according to air/vapor barrier manufacturer's written instructions.
   1. Verify that surfaces and conditions are suitable to accept work as outlined in this section.
   2. Commencement of work outlined in this section shall be deemed as acceptance of existing work and conditions.
   3. Examine joints before sealing to ensure configurations, surfaces and widths are suitable for spray polyurethane foam. Report in writing all defects stating the locations of joints deemed unacceptable for the application of the spray polyurethane foam.

3.03 PREPARATION

A. Protection:
   1. Mask and cover adjacent areas to protect from over spray.
   2. Ensure any required foam stop or back up material are in place to prevent over spray and achieve complete seal.
   3. Seal off existing ventilation equipment. Install temporary ducting and fans to ensure exhaust fumes. Provide for make-up air.
   4. Erect barriers, isolate area and post warning signs to advise non-protected personnel to avoid the spray area.
   5. Surface Preparation
      a. Surfaces to receive foam insulation shall be clean, dry and properly fastened to ensure adhesion of the polyurethane foam to the substrate.
      b. Ensure that all work by other trades that may penetrate through the air barrier system is in place and complete.
      c. Ensure that surface preparation and any primers required conform to the manufacturer's instructions.
      d. Prepare surfaces by brushing, scrubbing. Scraping, or grinding to remove loose mortar, dust, oil, grease, oxidation, mill scale and other contaminants which will affect adhesion and integrity of the spray polyurethane foam. Wipe down metal surfaces to remove release agents or other non-compatible coatings, using clean sponges or rags soaked in a solvent compatible with the spray polyurethane foam. Ensure surfaces are dry before proceeding.
      e. Install transition membranes around and into all rough openings, to all materials penetrating the exterior wall to all applicable surfaces and ensure proper adhesion of the transition membranes to the substrate, capable of having spray polyurethane foam insulation.
      f. Install counter-flashings:
         1) Metal: Mechanically fasten metal counter-flashings with screws at 8” (200 mm) o.c.
         2) Membrane: Cut into and uncover only 3” of siliconized release paper along one edge of the counter-flashing membrane. Adhere membrane flashing to the pre-primed substrate a minimum of 3” and roll firmly in place.
      g. Ensure veneer anchors are in place.

3.04 APPLICATION

A. Spray-application of polyurethane foam shall be installed in accordance with ULC S705.2-02 and the manufacturer's instructions.

B. Apply only when surfaces and environmental conditions are within limits prescribed by the material manufacturer and the ULC S705.2 Installation standard.

C. Apply in consecutive passes as recommended by manufacturer to thickness as indicated on drawings. Passes shall be not less than ½ inch and not greater than 2 inches.

D. Do not install spray polyurethane foam within 3 inches of heat emitting devices such as light fixtures and chimneys.

E. Finished surface of foam insulation to be free of voids and embedded foreign objects.

F. Remove masking materials and over spray from adjacent areas immediately after foam surface has hardened. Ensure cleaning methods do not damage work performed by other sections.

G. Trim, as required, any excess thickness that would interfere with the application of cladding/covering system by other trades.

H. Clean and restore surfaces soiled or damaged by work of the section. Consult with section of work soiled before cleaning to ensure methods used will not damage the work.

I. Do not permit adjacent work to be damaged by work of this section. Damage to work of this section caused by other sections shall be repaired by this section at the expense of the subcontractor causing the damage.

J. Complete connections to other components or repair any gaps, holes or other damage using material which conforms to ULC S710.1 Polyurethane Sealant Foam - One Component - Material or ULC S711.1 Polyurethane Sealant Foam - Two Components - Material and shall be installed in accordance with ULC S710.2 Polyurethane Sealant Foam - One component - Installation or ULC S711.2 Polyurethane Sealant Foam - Two Component - Installation, whichever is appropriate.

K. Where insulation is not protected with masonry veneer, install intumescent paint to required wet or dry mil thickness or coverage rate in accordance with manufacturer's instructions, by brush, roller, conventional or airless spray.

3.05 TOLERANCES

A. Maximum variation from indicated thickness: minus (-) ¼ inch; plus (+) ½ inch.

3.06 PROTECTION

A. Cover the spray polyurethane foam with a thermal barrier when installed on the interior of the building.

END OF SECTION

SECTION 07 3113
ASPHALT SHINGLES

PART 1 - GENERAL

1.01 SUMMARY

A. Section includes the following:
   1. Asphalt shingles.
   2. Felt underlayment.
   3. Self-adhering sheet underlayment.
   4. Ridge vents

1.02 RELATED SECTIONS

A. Division 6 Section "Rough Carpentry" for roof deck wood structural panels.

B. Division 7 Section "Sheet Metal Flashing and Trim" for metal roof penetration flashings and counterflashings not part of this Section.

1.03 DEFINITIONS

A. Roofing Terminology: Refer to ASTM D 1079 and glossary of NRCA's "The NRCA Roofing and Waterproofing Manual" for definitions of terms related to roofing work in this Section.

1.04 SUBMITTALS

A. Product Data: For each type of product indicated.

B. Samples for Initial Selection: For each type of asphalt shingle, ridge and hip cap shingles indicated.
   1. Include similar Samples of trim and accessories involving color selection.

C. Samples for Verification:
   1. Ridge cap, drip edge and other accessories

D. Qualification Data: For Installer.

E. Warranties: Special warranties specified in this Section.

1.05 QUALITY ASSURANCE

A. Source Limitations: Obtain field, ridge and hip cap shingles through one source from a single asphalt shingle manufacturer.

B. Fire-Test-Response Characteristics: Provide asphalt shingle and related roofing materials with the fire-test-response characteristics indicated, as determined by testing identical products per test method below by UL or another testing and inspecting agency acceptable to authorities having jurisdiction. Identify materials with appropriate markings of applicable testing and inspecting agency.
   1. Exterior Fire-Test Exposure: Class A; ASTM E 108 or UL 790, for application and roof slopes indicated.

1.06 DELIVERY, STORAGE, AND HANDLING

A. Store roofing materials in a dry, well-ventilated, weathertight location according to asphalt shingle manufacturer's written instructions. Store underlayment rolls on end on pallets or other raised surfaces. Do not double-stack rolls.
   1. Handle, store, and place roofing materials in a manner to avoid significant or permanent damage to roof deck or structural supporting members.
   2. Protect unused underlayment from weather, sunlight, and moisture when left overnight or when roofing work is not in progress.

1.07 PROJECT CONDITIONS

A. Weather Limitations: Proceed with installation only when existing and forecasted weather conditions permit asphalt shingle roofing to be performed according to manufacturer's written instructions and warranty requirements.
   1. Install self-adhering sheet underlayment within the range of ambient and substrate temperatures recommended by manufacturer.

1.08 WARRANTY

A. Special Warranty: Manufacturer's standard form in which manufacturer agrees to repair or replace asphalt shingles that fail in materials or workmanship within specified warranty period. Materials failures include manufacturing defects and failure of asphalt shingles to self-seal after a reasonable time.
   1. Material Warranty Period: 50 years from date of Substantial Completion, prorated, with first 5 years nonprorated.
   2. Wind-Speed Warranty Period: Asphalt shingles will resist blow-off or damage caused by wind speeds up to 110mph for 5 years from date of Substantial Completion.
   3. Algae-Discoloration Warranty Period: Asphalt shingles will not discolor five years from date of Substantial Completion.
   4. Workmanship Warranty Period: 10 years from date of Substantial Completion.
   5. Special Project Warranty: Roofing Installer's warranty, on warranty form at end of this Section, signed by roofing Installer, covering Work of this Section, in which roofing Installer agrees to repair or replace components of asphalt shingle roofing that fail in materials or workmanship within the following warranty period:
      a. Warranty Period: Five years from date of Substantial Completion.

PART 2 - PRODUCTS

2.01 MANUFACTURERS

A. GAF Materials Corporation

B. Celotex Corporation.

C. CertainTeed Corporation.

D. Owens Corning.

2.02 GLASS-FIBER-REINFORCED ASPHALT SHINGLES

A. Laminated-Strip Asphalt Shingles: ASTM D 3462, laminated, multi-ply overlay construction, glass-fiber reinforced, mineral-granule surfaced, and self-sealing.
   1. Basis-of-Design Product:
      a. GAF Materials Corporation, Elk; “Camelot”, or a comparable product of one of the following:
         1) Celotex Corporation.
         2) CertainTeed Corporation.
         3) Owens Corning.
   2. Strip Size: Manufacturer's standard.
   3. Algae Resistance: Granules treated to resist algae discoloration.
   4. Color and Blends: As selected by Architect from manufacturer's full range.

B. Hip and Ridge Shingles: Manufacturer's standard units to match asphalt shingles.

2.03 UNDERLAYMENT MATERIALS

A. Self-Adhering Eave Protection and Underlayment Membrane:

1. ASTM D 1970, minimum of 40-mil- thick, slip-resisting, polyethylene-film-reinforced top surface laminated to SBS-modified asphalt adhesive, with release paper backing; cold applied.
2. Available Products, as approved by the single manufacturer:
   a. Carlisle Coatings & Waterproofing, Div. of Carlisle Companies Inc.; Dri-Start A
   b. Grace, W. R. & Co.; Grace Ice and Water Shield.
   c. Henry Company; Perma-Seal PE.
   d. Johns Manville International, Inc.; Roof Defender.
   e. NEI Advanced Composite Technology; AC Poly Ice and StormSeal.
   f. Owens Corning; WeatherLock M.
   g. Polyguard Products, Inc.; Polyguard Deck Guard.
   h. Protecto Wrap Company; Rainproof TM.
   i. SafSeal Innovations; SafSeal 7740.

B. Underlayment: Synthetic non-asphaltic sheet, intended by manufacturer for mechanically fastened roofing underlayment without sealed seams.
1. Self Sealability: Passing nail sealability test specified in ASTM D1970.
2. Low Temperature Flexibility: Passing test specified in ASTM D1970.
3. Fasteners: As specified by manufacturer and building code qualification report or approval, if any.
4. Products:
   a. Deck-Armor Premium Breathable Roof Deck Protection by GAF.
   b. Substitutions: See Division 1 - Product Requirements.

2.04 ACCESSORIES

A. Asphalt Roofing Cement: ASTM D 4586, Type II, asbestos free.

B. Roofing Nails: ASTM F 1667; aluminum, stainless-steel, copper, or hot-dip galvanized steel wire shingle nails, minimum 0.120-inch- diameter, smooth shank, sharp-pointed, with a minimum 3/8-inch- diameter flat head and of sufficient length to penetrate 3/4 inch into solid wood decking or extend at least 1/8 inch through OSB or plywood sheathing.
1. Where nails are in contact with metal flashing, use nails made from same metal as flashing.
2. Underlayment Nails: Aluminum, stainless-steel, or hot-dip galvanized steel wire with low profile capped heads or disc caps, 1-inch minimum diameter.

2.05 METAL FLASHING AND TRIM

A. Sheet Metal Flashing and Trim: Comply with requirements in Division 7 Section "Sheet Metal Flashing and Trim."
1. Sheet Metal: Coil-coated aluminum.

B. Fabricate sheet metal flashing and trim to comply with recommendations in SMACNA's "Architectural Sheet Metal Manual" that apply to design, dimensions, metal, and other characteristics of item.
1. Apron Flashings: Fabricate with lower flange a minimum of 5 inches over and 4 inches beyond each side of downslope asphalt shingles and 6 inches up the vertical surface.
2. Step Flashings: Fabricate with a headlap of 2 inches and a minimum extension of 5 inches over the underlying asphalt shingle and up the vertical surface.
3. Drip Edges: Fabricate in lengths not exceeding 10 feet with 2-inch roof deck flange and 1-1/2-inch fascia flange with 3/8-inch drip at lower edge. Provide vented edge drip at vented insulation.

2.06 RIDGE VENTS:

A. Manufacturer's standard, rigid section high-density polypropylene or other UV-stabilized plastic ridge vent with nonwoven geotextile filter strips and external deflector baffles for use under ridge shingles. Manufacturers: Subject to compliance with requirements, provide products by one of the following:
   1. Ridge Filtervent; Air Vent, Inc. (for Class A).
   2. Cobra Ridge Vent; GAF Building Materials Corporation.
   3. Roll Vent; Obdyke: Benjamin Obdyke, Inc.
   4. Trimline; Trimline Roof Ventilation Systems.

PART 3 - EXECUTION

3.01 EXAMINATION

A. Examine substrates, areas, and conditions, with Installer present, for compliance with requirements for installation tolerances and other conditions affecting performance of work.
   1. Examine roof sheathing to verify that sheathing joints are supported by framing and blocking or metal clips and that installation is within flatness tolerances.
   2. Verify that substrate is sound, dry, smooth, clean, sloped for drainage, and completely anchored; and that provision has been made for flashings and penetrations through asphalt shingles.
   3. For the record, prepare written report, endorsed by Installer, listing conditions detrimental to performance of work.

B. Proceed with installation only after unsatisfactory conditions have been corrected.

3.02 UNDERLAYMENT INSTALLATION

A. Single-Layer Underlayment: Install single layer of underlayment on roof deck perpendicular to roof slope in parallel courses. Lap sides a minimum of 2 inches over underlying course. Lap ends a minimum of 4 inches. Stagger end laps between succeeding courses at least 72 inches. Fasten with underlayment nails.
   1. Install underlayment on roof deck not covered by self-adhering sheet underlayment.
      a. Lap sides over self-adhering sheet underlayment not less than 3 inches in direction to shed water. Lap ends not less than 6 inches over self-adhering sheet underlayment.

B. Self-Adhering Sheet (Ice and Water Shield) Underlayment: Install self-adhering sheet underlayment, wrinkle free, on roof deck. Comply with low-temperature installation restrictions of underlayment manufacturer if applicable. Install at locations indicated below, unless indicated otherwise on drawings, lapped in direction to shed water. Lap sides not less than 3-1/2 inches. Lap ends not less than 6 inches staggered 24 inches between courses. Roll laps with roller. Cover underlayment within seven days.
   1. Eaves: Extend from edges of eaves 24 inches beyond interior face of exterior wall.
   2. Valleys: Extend from lowest to highest point 18 inches on each side.
   3. Hips: Extend 18 inches on each side.
   4. Sidewalls: Extend beyond sidewall 18 inches and return vertically against sidewall not less than 4 inches.

3.03 METAL FLASHING INSTALLATION

A. General: Install metal flashings and other sheet metal to comply with requirements in Division 7 Section "Sheet Metal Flashing and Trim."
   1. Install metal flashings according to recommendations in ARMA's "Residential Asphalt Roofing Manual" and asphalt shingle recommendations in NRCA's "The NRCA Roofing and Waterproofing Manual."

B. Step Flashings: Install with a headlap of 2 inches and extend over the underlying asphalt shingle and up the vertical surface. Fasten to roof deck only.

C. Eave Drip Edges: Install eave drip edge flashings below underlayment and fasten to roof sheathing.

3.04 ASPHALT SHINGLE INSTALLATION

A. Install asphalt shingles according to manufacturer's written instructions, recommendations in ARMA's "Residential Asphalt Roofing Manual," and asphalt shingle recommendations in NRCA's "The NRCA Roofing and Waterproofing Manual."

B. Install starter strip along lowest roof edge, consisting of an asphalt shingle strip with tabs removed at least 7 inches wide with self-sealing strip face up at roof edge.
   1. Extend asphalt shingles 1/2 inch over fascia at eaves and rakes.
   2. Install starter strip along rake edge.

C. Install first and remaining courses of asphalt shingles stair-stepping diagonally across roof deck with manufacturer's recommended offset pattern at succeeding courses, maintaining uniform exposure, unless otherwise indicated by manufacturer.

D. Fasten asphalt shingle strips with a minimum of six roofing nails located according to manufacturer's written instructions.
   1. Where roof slope exceeds 20:12, seal asphalt shingles with asphalt roofing cement spots after fastening with additional roofing nails.
   2. Where roof slope is less than 4:12, seal asphalt shingles with asphalt roofing cement spots.
   3. When ambient temperature during installation is below 50 deg F, seal asphalt shingles with asphalt roofing cement spots.

E. Closed-Cut Valleys: Extend asphalt shingle strips from one side of valley 12 inches beyond center of valley. Use one-piece shingle strips without joints in the valley. Fasten with extra nail in upper end of shingle. Install asphalt shingle courses from other side of valley and cut back to a straight line 2 inches short of valley centerline. Trim upper concealed corners of cut-back shingle strips.
   1. Do not nail asphalt shingles within 6 inches of valley center.
   2. Set trimmed, concealed-corner asphalt shingles in a 3-inch- wide bed of asphalt roofing cement.
   3. "California Closed-Cut Valleys" are not permitted.

F. Hip Cap Shingles: Maintain same exposure of cap shingles as roofing shingle exposure. Fasten with roofing nails of sufficient length to penetrate sheathing.

3.05 ACCESSORY INSTALLATION

A. General: Install accessories with positive anchorage to building and weathertight mounting and provide for thermal expansion. Coordinate installation with flashings and other components.
   1. Install components required for a complete sheet metal roofing assembly including trim, copings, seam covers, flashings, sealants, gaskets, fillers, metal closures, closure strips, and similar items.
   2. Install accessories integral to sheet metal roofing that are specified in Division 7 Section "Sheet Metal Flashing and Trim" to comply with that Section's requirements.

END OF SECTION

SECTION 07 4113
METAL ROOF PANELS

PART 1 GENERAL

1.01 SECTION INCLUDES

A. Architectural roofing system of preformed steel panels.

B. Attachment system.

C. Finishes.

D. Accessories.

1.02 RELATED REQUIREMENTS

A. Section 06 1000 - Rough Carpentry: Roof sheathing.

B. Section 07 4213 - Metal Wall Panels: Preformed wall panels.

C. Section 07 9200 - Joint Sealants: Sealing joints between metal roof panel system and adjacent construction.

1.03 REFERENCE STANDARDS

A. ASTM A792/A792M - Standard Specification for Steel Sheet, 55% Aluminum-Zinc Alloy-Coated by the Hot-Dip Process; 2010 (Reapproved 2015).

B. ASTM D1970/D1970M - Standard Specification for Self-Adhering Polymer Modified Bituminous Sheet Materials Used as Steep Roofing Underlayment for Ice Dam Protection; 2013.

1.04 SUBMITTALS

A. Product Data: Manufacturer's data sheets on each product to be used, including:
   1. Storage and handling requirements and recommendations.
   2. Installation methods.
   3. Specimen warranty.

B. Shop Drawings: Include layouts of roof panels, details of edge and penetration conditions, spacing and type of connections, flashings, underlayments, and special conditions.
   1. Show work to be field-fabricated or field-assembled.

C. Selection Samples: For each roofing system specified, submit color chips representing manufacturer's full range of available colors and patterns.

D. Verification Samples: For each roofing system specified, submit samples of minimum size 12 inches square, representing actual roofing metal, thickness, profile, color, and texture.

E. Warranty: Submit specified manufacturer's warranty and ensure that forms have been completed in Owner's name and are registered with manufacturer.

1.05 QUALITY ASSURANCE

A. Manufacturer Qualifications: Company specializing in manufacturing products specified in this section, with not less than three years of documented experience.

B. Installer Qualifications: Company specializing in performing work of the type specified and with at least three years of documented experience.

1.06 DELIVERY, STORAGE, AND HANDLING

A. Store roofing panels on project site as recommended by manufacturer to minimize damage to panels prior to installation.

1.07 WARRANTY

A. See Section 01 7800 - Closeout Submittals, for additional warranty requirements.

B. Finish Warranty: Provide manufacturer's special warranty covering failure of factory-applied exterior finish on metal roof panels and agreeing to repair or replace panels that show evidence of finish degradation, including significant fading, chalking, cracking, or peeling within specified warranty period of twenty years from Date of Substantial Completion.

C. Waterproofing Warranty: Provide manufacturer's warranty for weathertightness of roofing system, including agreement to repair or replace roofing that fails to keep out water within specified warranty period of five years from Date of Substantial Completion.

PART 2 PRODUCTS

2.01 ARCHITECTURAL METAL ROOF PANELS

A. Architectural Metal Roofing: Provide complete engineered system complying with specified requirements and capable of remaining weathertight while withstanding anticipated movement of substrate and thermally induced movement of roofing system.

B. Metal Panels: Factory-formed panels with factory-applied finish.
   1. Steel Panels:
      a. Aluminum-zinc alloy-coated steel conforming to ASTM A792/A792M; minimum AZ50 coating.
      b. Steel Thickness: Minimum 24 gage (0.024 inch).
   2. Profile: Standing seam, with minimum 1.75 inch seam height; concealed fastener system with snap-together seam; non-mechanically seamed.
   3. Texture: Smooth.
   4. Width: Maximum panel coverage of 18 inches.
   5. Manufacturer: Centria: SDP 175 Structural Design Panels.
   6. Locations: Accent roof areas as shown.

2.02 ATTACHMENT SYSTEM

A. Concealed System: Provide manufacturer's standard stainless steel or nylon-coated aluminum concealed anchor clips designed for specific roofing system and engineered to meet performance requirements, including anticipated thermal movement.

2.03 FABRICATION

A. Panels: Provide factory or field fabricated panels with applied finish and accessory items, using manufacturer's standard processes as required to achieve specified appearance and performance requirements.

2.04 FINISHES

A. Fluoropolymer Coating System: Manufacturer's standard multi-coat thermocured coating system, including minimum 70 percent fluoropolymer color topcoat with minimum total dry film thickness of 0.9 mil; color and gloss to match sample.

2.05 ACCESSORIES

A. Miscellaneous Sheet Metal Items: Provide flashings, trim, moldings, closure strips, and caps of the same material, thickness, and finish as used for the roofing panels. Items completely concealed after installation may optionally be made of stainless steel.

B. Rib and Ridge Closures: Provide prefabricated, close-fitting components of steel with corrosion resistant finish or combination steel and closed-cell foam.

C. Sealants:

1. Exposed Sealant: Elastomeric; silicone, polyurethane, or silyl-terminated polyether/polyurethane.
2. Concealed Sealant: Non-curing butyl sealant or tape sealant.

D. Self-Adhering Eave Protection Membrane:
1. ASTM D 1970, minimum of 40-mil- thick, slip-resisting, polyethylene-film-reinforced top surface laminated to SBS-modified asphalt adhesive, with release paper backing; cold applied.
2. Manufacturer and Products:
a. Carlisle Coatings & Waterproofing, Div. of Carlisle Companies Inc.; Dri-Start A
b. Grace, W. R. & Co.; Grace Ice and Water Shield.
c. Henry Company; Perma-Seal PE.
d. Owens Corning; WeatherLock M.
e. Substitutions: See Section 01 6000 - Product Requirements.

E. Underlayment: Synthetic non-asphaltic sheet, intended by manufacturer for mechanically fastened roofing underlayment without sealed seams.
1. Self Sealability: Passing nail sealability test specified in ASTM D1970/D1970M.
2. Low Temperature Flexibility: Passing test specified in ASTM D1970/D1970M.
3. Fasteners: As specified by manufacturer and building code qualification report or approval.

PART 3 EXECUTION

3.01 EXAMINATION

A. Do not begin installation of preformed metal roof panels until substrates have been properly prepared.

B. If substrate preparation is the responsibility of another installer, notify Architect of unsatisfactory preparation before proceeding.

3.02 PREPARATION

A. Coordinate roofing work with provisions for roof drainage, flashing, trim, penetrations, and other adjoining work to assure that the completed roof will be free of leaks.

B. Separate dissimilar metals by applying a bituminous coating, self-adhering rubberized asphalt sheet, or other permanent method approved by roof panel manufacturer.

C. Where metal will be in contact with wood or other absorbent material subject to wetting, seal joints with sealing compound and apply one coat of heavy-bodied bituminous paint.

3.03 UNDERLAYMENT INSTALLATION

A. Underlayment: Install single layer of underlayment on roof deck perpendicular to roof slope in parallel courses. Lap sides a minimum of 2 inches over underlying course. Lap ends a minimum of 4 inches. Stagger end laps between succeeding courses at least 72 inches. Fasten with underlayment nails.
1. Install underlayment on roof deck not covered by self-adhering sheet underlayment.
a. Lap sides over self-adhering sheet underlayment not less than 3 inches in direction to shed water. Lap ends not less than 6 inches over self-adhering sheet underlayment.

B. Self-Adhering Sheet (Ice and Water Shield) Underlayment: Install self-adhering sheet underlayment, wrinkle free, on roof deck. Comply with low-temperature installation restrictions of underlayment manufacturer if applicable. Install at locations indicated below, unless indicated otherwise on drawings, lapped in direction to shed water. Lap sides not less

than 3-1/2 inches. Lap ends not less than 6 inches staggered 24 inches between courses. Roll laps with roller. Cover underlayment within seven days.

1. Eaves: Extend from edges of eaves 24 inches beyond interior face of exterior wall.
2. Valleys: Extend from lowest to highest point 18 inches on each side.

3.04 INSTALLATION

A. Overall: Install roofing system in accordance with approved shop drawings and panel manufacturer's instructions and recommendations, as applicable to specific project conditions. Anchor all components of roofing system securely in place while allowing for thermal and structural movement.
   1. Install roofing system with concealed clips and fasteners, except as otherwise recommended by manufacturer for specific circumstances.
   2. Minimize field cutting of panels. Where field cutting is absolutely required, use methods that will not distort panel profiles. Use of torches for field cutting is absolutely prohibited.

B. Accessories: Install all components required for a complete roofing assembly, including flashings, trim, moldings, closure strips, caps, rib closures, ridge closures, and similar roof accessory items.

C. Roof Panels: Install panels in strict accordance with manufacturer's instructions, minimizing transverse joints except at junction with penetrations.
   1. Form weathertight standing seams incorporating concealed clips, using an automatic mechanical seaming device approved by the panel manufacturer.
   2. Incorporate concealed clips at panel joints, and snap panels together to provide weathertight joints.
   3. Install sealant or sealant tape, as recommended by panel manufacturer, at end laps and side joints.

3.05 CLEANING

A. Clean exposed sheet metal work at completion of installation. Remove grease and oil films, excess joint sealer, handling marks, and debris from installation, leaving the work clean and unmarked, free from dents, creases, waves, scratch marks, or other damage to the finish.

3.06 PROTECTION

A. Do not permit storage of materials or roof traffic on installed roof panels. Provide temporary walkways or planks as necessary to avoid damage to completed work. Protect roofing until completion of project.

B. Touch-up, repair, or replace damaged roof panels or accessories before Date of Substantial Completion.

END OF SECTION

SECTION 07 4213
METAL WALL PANELS

PART 1 - GENERAL

1.01 SECTION INCLUDES

A. Concealed and exposed fastener metal wall panels as part of the assembly described below.
   1. Metal Wall Panels over Masonry Wall System: Single-skin exposed fastener metal wall panels applied as exterior cladding over a masonry wall and spray-applied insulation. Metal wall panel installation specified in this Section includes secondary metal subgirt framing for panel attachment.
   2. Single-skin concealed fastener metal wall panels applied as exterior cladding over a framed wall and spray-applied insulation.
   3. Exposed fastener metal panel installed as roof screen.

1.02 RELATED REQUIREMENTS

A. Division 04 Section "Unit Masonry"

B. Division 07 Section "Air Barriers": applied air, moisture, and water vapor control membrane.

C. Division 07 Section "Sheet Metal Flashing and Trim" for sheet metal copings, flashings, reglets and roof drainage items.

D. Division 07 Section "Joint Sealants" for field-applied joint sealants.

1.03 REFERENCES

A. American Architectural Manufacturer's Association (AAMA):
   1. AAMA 621 - Voluntary Specification for High Performance Organic Coatings on Coil Coated Architectural Hot Dipped Galvanized (HDG) and Zinc-Aluminum Coated Steel Substrates.

B. ASTM International (ASTM):
   1. ASTM A 653/A 653M - Specification for Steel Sheet, Zinc-Coated (Galvanized) or Zinc-Iron Alloy-Coated (Galvannealed) by the Hot-Dip Process.
   2. ASTM C 754 - Specification for Installation of Steel Framing Members to Receive Screw Attached Gypsum Panel Products.
   3. ASTM C 920 - Specification for Elastomeric Joint Sealants.
   4. ASTM C 1007 - Standard Specification for Installation of Load Bearing (Transverse and Axial) Steel Studs and Related Accessories.
   5. ASTM E 72 - Standard Test Methods of Conducting Strength Tests of Panels for Building Construction.

C. Sheet Metal and Air Conditioning Contractors National Association, Inc. (SMACNA):
   1. Architectural Sheet Metal Manual.

1.04 PERFORMANCE REQUIREMENTS

A. General: Provide metal wall panel assemblies meeting performance requirements as determined by application of specified tests by a qualified testing agency on manufacturer's standard assemblies.

B. Structural Performance: Provide metal wall panel assemblies capable of withstanding the effects of indicated loads and stresses within limits and under conditions indicated, per ASTM E 72:
   1. Wind Loads: Determine loads based on uniform pressure, importance factor, exposure category, and basic wind speed indicated on drawings.

2. Limits of Deflection: Metal wall panel assembly shall withstand scheduled wind pressure with the following allowable deflection:
   a. Maximum allowable deflection limited to L/180 deflection of panel perimeter normal to plane of wall with no evidence of failure.
3. Secondary Metal Framing: Design secondary metal framing for metal wall panel assembly according to AISI's "Standard for Cold-Formed Steel Framing - General Provisions."
4. Side Joint Disengagement: Panels must be designed and tested under Negative load per ASTM E 72.

C. Thermal Movements: Allow for thermal movements from variations in both ambient and internal temperatures. Accommodate movement of support structure caused by thermal expansion and contraction.

1.05 QUALITY ASSURANCE

A. Manufacturer/Source: Provide metal wall panel and panel accessories from a single manufacturer.

B. Manufacturer Qualifications: Approved manufacturer listed in this Section with minimum 10 years experience in manufacture of similar products in successful use in similar applications.
   1. Approval of Comparable Products: Submit the following in accordance with project substitution requirements, within time allowed for substitution review:
      a. Product data, including certified independent test data indicating compliance with requirements.
      b. Sample submittal from similar project.
      c. Project references: Minimum of 5 installations not less than 5 years old, with Owner and Architect contact information.
      d. Sample warranty.
   2. Substitutions following award of contract are not allowed except as stipulated in Division 01 General Requirements.
   3. Approved manufacturers must meet separate requirements of Submittals Article.

C. Installer Qualifications: Experienced Installer with minimum of 5 years experience with successfully completed projects of a similar nature and scope.

1.06 ADMINISTRATIVE REQUIREMENTS

A. Preinstallation Meeting: Conduct preinstallation meeting at site attended by Construction Manager, Owner, Architect, manufacturer's representative, and other trade contractors.
   1. Coordinate building framing in relation to metal wall panel assembly.
   2. Coordinate installation of building air and water barrier behind metal wall panel assembly.
   3. Coordinate window, door and louver, and other openings and penetrations of metal wall panel assembly.

1.07 ACTION SUBMITTALS

A. Product Data: Manufacturer’s data sheets, for specified products.
   1. Include data indicating compliance with performance requirements, including load span tables tested for side joint disengagement under negative loads per ASTM E 72.

B. Shop Drawings: Provide shop drawings prepared by manufacturer or manufacturer's authorized Installer. Include full elevations showing openings and penetrations. Include details of each condition of installation and attachment. Provide details at a minimum scale 1-1/2-inch per foot of all required trim and extrusions needed for a complete installation.

1. Indicate points of supporting structure that must coordinate with metal wall panel assembly installation.

C. Samples for Initial Selection: For each product specified, provide representative color charts of manufacturer's full range of colors.

D. Samples for Verification: Provide 12-inch (300 mm) section of panel(s) showing finishes. Provide 12-inch (300 mm) long pieces of trim pieces and other exposed components.

1.08 INFORMATIONAL SUBMITTALS

A. Product Test Reports: Indicating compliance of products with requirements, from a qualified independent testing agency.

B. Qualification Information: For Installer firm.

C. Manufacturer's warranty: Submit sample warranty.

1.09 CLOSEOUT SUBMITTALS

A. Maintenance data.

1.10 DELIVERY, STORAGE, AND HANDLING

A. Protect metal wall panel products during shipping, handling, and storage to prevent staining, denting, deterioration of components or other damage.
   1. Deliver, unload, store, and erect metal wall panel products and accessory items without misshaping panels or exposing panels to surface damage from weather or construction operations.

1.11 WARRANTY

A. Special Manufacturer’s Warranty: On manufacturer’s standard form, in which manufacturer agrees to repair or replace components of metal wall panel assemblies that fail in materials and workmanship within two years from date of Substantial Completion.

B. Special Panel Finish Warranty: On manufacturer’s standard form, in which manufacturer agrees to repair or replace metal wall panels that evidence deterioration of finish within the following periods from the date of substantial completion:
   1. Warranty Period: 20 years.

PART 2 - PRODUCTS

2.01 MANUFACTURERS

A. Basis of Design:
   1. CENTRIA Architectural Systems; Moon Township, PA 15108-2944. Tel: (800)759-7474. Tel: (412)299-8000. Fax: (412)299-8317. Email: info@CENTRIA.com. Web: www.CENTRIA.com.
      a. Type 1: IW Series Metal Wall Panels
         1) Location: Performing Arts Center, H. S. Gym
      b. Type 2: Exposed Fastener Profiles Econolap 3/4"
         1) Location: Vertical walls at mansard roofs.
      c. Type 3: Intercept Series
         1) Location: Curtainwall

B. Other Manufacturers: Products meeting the performance and appearance must be submitted for approval prior to bidding. The following may be considered pending color and sample pre-approval, including accessories.
   1. ATAS International, Inc.:6612 Snowdrift Road, Allentown, PA 18106. www.atas.com.
   2. MBCI.

2.02 METAL WALL PANEL MATERIALS

A. Metallic-Coated Steel Face Sheet: Coil-coated, ASTM A 755/A 755M.
   1. Aluminum-zinc alloy-coated Steel Sheet: ASTM A 792/A 792 M, Class AZ50 Grade 50 (Class AZM150, Grade 275), structural steel quality.
   2. Face Sheet: Minimum 0.030 inch/22 gage (0.76 mm) nominal uncoated thickness.
   3. Surface: Smooth.

B. Perforated Screen Wall: Aluminum Face Sheet: Smooth surface coil-coated, ASTM B209, 3003-H14 alloy, 0.040 inch (1.0 mm) nominal thickness.

2.03 CONCEALED FASTENER METAL WALL PANELS

A. Metal Wall Panels, General: Factory-formed, concealed fastener panels with interconnecting side joints, fastened to supports with concealed fasteners, with factory-applied sealant in side laps when required to meet performance requirements.

B. Horizontal Joints: Horizontal Joints with drip edge and sloped drain shelf to provide positive water shed away from Panel Joinery.

C. Types 1: Flush-joint profile with raised flat pan and two stiffener beads:
   1. Basis of Design Product: CENTRIA, IW-40A.
   2. Panel Coverage: 12 inches (305 mm).
   3. Panel Height: 1.50 inches (38 mm).

D. Types 3: Closed-joint back-ventilated Rainscreen Panel with ¾"(19mm) wide reveals betweeen panels with independent panel attachment.
   1. Basis of Design Product: CENTRIA, Intercept Entyre Panel System
   2. Installation Sequence:
      a. Bottom up
   3. Installation Patterns:
      a. Vertical and/or horizontal orientation
      b. Variable running bond—vertically and horizontally
   4. Panel Reveal Width:
      a. 3/4" [19mm] Standard
   5. Panel Depth:
      a. 1 3/8" [35 mm] Standard

2.04 EXPOSED FASTENER METAL WALL PANELS

A. Metal Wall Panels, General: Factory-formed, Exposed fastener panels with overlapping side joints, fastened to supports with exposed fasteners, with field-applied sealants in side laps when required to meet performance requirements.

B. Type 2: Corrugated profile with lap joint:
   1. Basis of Design Product: CENTRIA, Exposed Fastener Profiles Econolap 3/4"
   2. Panel Coverage: 34 2/3 inches.
   3. Panel Height: 3/4 inches.
   4. Rib Spacing: 2 2/3 inches.

2.05 METAL WALL PANEL ACCESSORIES

A. Metal Wall Panel Accessories, General: Provide complete metal wall panel assembly incorporating trim, copings, fasciae, parapet caps, soffits, sills, inside and outside corners, and miscellaneous flashings. Provide manufacturer's factory-formed shims, flashings, gaskets, lap strips, closure strips, and caps for a complete installation. Fabricate accessories in accordance with SMACNA Manual.

B. Mitered Corners: Structurally-bonded horizontal interior and exterior trimless corners matching metal wall panel material, profile, and factory-applied finish, fabricated and finished by metal wall panel manufacturer.
   1. Welded, riveted, fastened, or field- fabricated corners do not meet the requirements of this specification.
   2. Basis of Design: CENTRIA, MicroSeam Corners.

C. Formed Flashing and Trim: Match material, thickness, and color of metal wall panels.

D. Sealants: Type recommended by metal wall panel manufacturer for application, meeting requirements of Division 07 Section "Joint Sealants."

E. Flashing Tape: 4-inch wide self-adhering butyl flashing tape.

F. Fasteners: Self-tapping screws and other acceptable fasteners recommended by panel manufacturer. Where exposed fasteners cannot be avoided, supply corrosion-resistant fasteners with heads matching color of metal wall panels by means factory-applied coating.

2.06 SECONDARY METAL SUBGIRT FRAMING

A. Miscellaneous Framing Components, General: Cold-formed metallic-coated steel sheet, ASTM A 653/A 653M, G90 (Z180).
   1. Hat Channels: 0.053 inch/16 ga. (1.34 mm) minimum.
   2. Sill Channels: 0.053 inch/16 ga. (1.34 mm) minimum.

2.07 METAL WALL PANEL FINISHES

A. Exposed Coil-Coated Finish System:
   1. Fluoropolymer Two-Coat System: 0.2-mil primer with 0.8-mil 70 percent PVDF fluoropolymer color coat, AAMA 621.
      a. Basis of Design: CENTRIA Fluorofinish.

B. Color:
   1. Exterior Surface: As selected by Architect from manufacturer's standard colors.
   2. Interior Surface: Manufacturer's standard primer color.

PART 3 - EXECUTION

3.01 EXAMINATION

A. Examine metal wall panel substrate with Installer present. Inspect for erection tolerances and other conditions that would adversely affect installation of metal wall panels.

B. Wall Substrate: Confirm that wall substrate is within tolerances acceptable to metal wall panel system manufacturer.
   1. Maximum substrate and framing deviations from flat plane acceptable:
      a. 1/4-inch in 20 feet vertically or horizontally.
      b. 1/2-inch across building elevation.
      c. 1/8-inch in 5 feet.

C. Openings: Verify that window, door, louver and other penetrations match layout on shop drawings.

D. Air/Moisture Barriers: Confirm that work has been completed, inspected, and tested as required.

E. Correct out-of-tolerance work and other deficient conditions prior to proceeding with metal wall panel system installation.

3.02 SECONDARY FRAMING INSTALLATION

A. Secondary Metal Subgirt Framing: Install secondary metal framing components to tolerances indicated, as shown on approved shop drawings. Install secondary metal framing and other metal panel supports per ASTM C 1007 and metal wall panel manufacturer's recommendations.

3.03 METAL WALL PANEL INSTALLATION

A. General: Install metal wall panels in accordance with approved shop drawings and manufacturer's recommendations. Install metal wall panels in orientation, sizes, and locations indicated. Anchor metal wall panels and other components securely in place. Provide for thermal and structural movement

B. Attach panels to metal framing using recommended clips, screws, fasteners, sealants, and adhesives indicated on approved shop drawings.
   1. Fasteners for Steel Wall Panels: Stainless-steel for exterior locations and locations exposed to moisture; carbon steel for interior use only.
   2. Fasten metal wall panels to supports with fasteners and spacing recommended by manufacturer.
   3. Provide weatherproof escutcheons for pipe and conduit penetrating exterior walls.
   4. Dissimilar Materials: Where elements of metal wall panel system will come into contact with dissimilar materials, treat faces and edges in contact with dissimilar materials as recommended by manufacturer.

C. Joint Sealers: Install joint sealants where indicated on approved shop drawings.

3.04 ACCESSORY INSTALLATION

A. General: Install metal wall panel accessories with positive anchorage to building and provide for thermal expansion. Coordinate installation with flashings and other components.
   1. Install related flashings and sheet metal trim per requirements of Division 07 Section "Sheet Metal Flashing and Trim."
   2. Install components required for a complete metal wall panel assembly, including trim, copings, corners, lap strips, flashings, sealants, fillers, closure strips, and similar items.
   3. Comply with performance requirements and manufacturer's written installation instructions.
   4. Provide concealed fasteners except where noted on approved shop drawings.
   5. Set units true to line and level as indicated.

3.05 FIELD QUALITY CONTROL

A. Manufacturer's Field Service: Engage a service representative authorized by metal wall panel manufacturer to inspect completed installation. Submit written report.

B. Correct deficiencies noted in manufacturer's report.

3.06 CLEANING AND PROTECTION

A. Remove temporary protective films. Clean finished surfaces as recommended by metal wall panel manufacturer. Clear weep holes and drainage channels of obstructions, dirt, and sealant. Maintain in a clean condition during construction.

B. Replace damaged panels and accessories that cannot be repaired by finish touch-up or minor repair.

END OF SECTION

SECTION 07 5300
ELASTOMERIC MEMBRANE ROOFING

PART 1 GENERAL

1.01 SECTION INCLUDES

A. Elastomeric roofing membrane, adhered conventional application.

B. Insulation, flat and tapered.

C. Flashings.

D. Roofing stack boots, roofing expansion joints, and walkway pads.

1.02 RELATED REQUIREMENTS

A. Section 05 3100 - Steel Decking: Product requirements for acoustical insulation for deck flutes, for placement by this section.

B. Section 06 1000 - Rough Carpentry: Wood nailers and curbs.

C. Section 07 6200 - Sheet Metal Flashing and Trim: Counterflashings, reglets.

D. Section 07 7100 - Roof Specialties: Copings, fascia, prefabricated roofing expansion joint flashing; to be included in roofing system warranty.

E. Section 07 7200 - Roof Accessories: Roof-mounted units; prefabricated curbs.

F. Section 26 4113 - Lightning Protection for Structures.

1.03 REFERENCE STANDARDS

A. ASTM C518 - Standard Test Method for Steady-State Thermal Transmission Properties by Means of the Heat Flow Meter Apparatus; 2015.

B. ASTM C726 - Standard Specification for Mineral Wool Roof Insulation Board; 2012.

C. ASTM C1289 - Standard Specification for Faced Rigid Cellular Polyisocyanurate Thermal Insulation Board; 2016.

D. ASTM D4637/D4637M - Standard Specification for EPDM Sheet Used in Single-Ply Roof Membrane; 2013.

E. FM DS 1-28 - Wind Design; 2007.

F. NRCA (RM) - The NRCA Roofing Manual; 2017.

G. UL (DIR) - Online Certifications Directory; current listings at database.ul.com.

1.04 ADMINISTRATIVE REQUIREMENTS

A. Preinstallation Meeting: Convene a preinstallation meeting one week before starting work of this section; require attendance by all affected installers; review preparation and installation procedures and coordination and scheduling necessary for related work.

1.05 SUBMITTALS

A. See Section 01 3000 - Administrative Requirements - Administrative Requirements, for submittal procedures.

B. Product Data: Provide data indicating membrane materials, flashing materials, insulation, and fasteners.

C. Shop Drawings: Indicate joint or termination detail conditions, conditions of interface with other materials, setting plan for tapered insulation, and mechanical fastener layout.

D. Manufacturer's Installation Instructions: Indicate membrane seaming precautions and perimeter conditions requiring special attention.

E. Manufacturer's Field Reports: Indicate procedures followed, ambient temperatures, humidity, and supplementary instructions given.

F. Warranty: Submit manufacturer warranty and ensure forms have been completed in Owner's name and registered with manufacturer.

1.06 QUALITY ASSURANCE

A. Manufacturer Qualifications: Company specializing in manufacturing the products specified in this section with minimum five years of documented experience.

B. Installer Qualifications: Company specializing in performing the work of this section with minimum five years documented experience, and approved by manufacturer.

1.07 DELIVERY, STORAGE, AND HANDLING

A. Deliver products in manufacturer's original containers, dry, undamaged, with seals and labels intact.

B. Store products in weather protected environment, clear of ground and moisture.

C. Protect foam insulation from direct exposure to sunlight.

1.08 FIELD CONDITIONS

A. Do not apply roofing membrane during unsuitable weather.

B. Do not apply roofing membrane when ambient temperature is below 40 degrees F or above 90 degrees F.

C. Do not apply roofing membrane to damp or frozen deck surface or when precipitation is expected or occurring.

D. Do not expose materials vulnerable to water or sun damage in quantities greater than can be weatherproofed the same day.

1.09 WARRANTY

A. See Section 01 7800 - Closeout Submittals, for additional warranty requirements.

B. Special Project Warranty: Submit roofing Installer's warranty, on warranty form signed by Installer, covering Work of this Section, including all components of membrane roofing system such as roofing membrane, base flashing, roof insulation, and walkway products, for the following warranty period:
   1. Warranty Period: Two years from date of Substantial Completion.

C. Manufacturer's Warranty: Manufacturer's Warranty standard form, without monetary limitation, in which manufacturer agrees to repair or replace components of membrane roofing system that fail in materials or workmanship within specified warranty period. Failure includes roof leaks.
   1. Warranty Period: 30 years from date of Substantial Completion.
   2. Coverage: Material and labor.
   3. Include edge metal in Roofing System Warranty. See Section 077100.

PART 2 PRODUCTS

2.01 MANUFACTURERS

A. EPDM Membrane Materials:
   1. Carlisle Roofing Systems, Inc: www.carlisle-syntec.com.
   2. Firestone Building Products, LLC: www.firestonebpco.com.
   3. Versico, a division of Carlisle Construction Materials Inc: www.versico.com/sle.
   4. Substitutions: See Section 01 6000 - Product Requirements.

2.02 ROOFING

A. Elastomeric Membrane Roofing: One ply membrane, fully adhered, over insulation.

B. Roofing Assembly Requirements:
   1. Roof Covering External Fire Resistance Classification: UL (DIR) certified Class A.
   2. Factory Mutual Classification: Class 1 and windstorm resistance of 1-60, in accordance with FM DS 1-28.

C. Acceptable Insulation Types - Tapered Application:
   1. Uniform thickness polyisocyanurate board covered with tapered polyisocyanurate board.

2.03 ROOFING MEMBRANE AND ASSOCIATED MATERIALS

A. Membrane: Ethylene-propylene-diene-terpolymer (EPDM); non-reinforced; complying with minimum properties of ASTM D4637/D4637M.
   1. Thickness: 0.060 inch (60 mil).
   2. Sheet Width: 120 inch, minimum; factory-fabricate into largest sheets possible.
   3. Solar Reflectance: 0.75, minimum, initial, and 0.64, minimum, 3-year, certified by Cool Roof Rating Council.
   4. Thermal Emittance: 0.84, minimum, initial, and 0.87, minimum, 3-year, certified by Cool Roof Rating Council.
   5. Color: White.

B. Seaming Materials: Standard synthetic-rubber polymer primer and 6-inch wide minimum, butyl splice tape with release film.

C. Membrane Fasteners: As recommended by and approved by membrane manufacturer.

D. Flexible Flashing Material: Same material as membrane; conforming to the following:
   1. Thickness: 60 mil.
   2. Tensile Strength: 1,200 psi.
   3. Elasticity: 50 percent with full recovery without set.
   4. Color: White.

2.04 COVER BOARD

A. Fiberglass Mat Faced Gypsum Roof Board:
   1. Thickness: 5/8 inch.
   2. Width: 4 feet.
   3. Length: 8 feet.
   4. Weight: 2.5 lb/sq. ft.
   5. Surfacing: Fiberglass mat with non-asphaltic coating.
   6. Flexural Strength, Parallel (ASTM C473): 100 lbf, minimum.
   7. Flute Span (ASTM E661): 8 inches.
   8. Permeance (ASTM E96): greater than 17 perms.
   9. R-Value (ASTM C518): 0.67.
   10. Water Absorption (ASTM C1177): Less than 10 percent of weight.
   11. Compressive Strength (Applicable Sections of ASTM C472): 900 pounds per square inch.
   12. Surface Water Absorption (ASTM C473): Not more than 2 grams.
   13. Acceptable Products:
      a. DensDeck Prime, Georgia-Pacific Gypsum.

2.05 INSULATION

A. Polyisocyanurate Board Insulation: Rigid cellular foam, complying with ASTM C1289, Type II, Class 1, cellulose felt or glass fiber mat both faces; Grade 2 and with the following characteristics:
   1. Compressive Strength: 20 psi
   2. Board Size: 48 by 96 inch.
   3. Board Thickness (base layer): 1.5 inch minimum.
   4. Flat roof insulation thickness: 5" total thickness, two-layers.
   5. Tapered Board insulation: Slope as indicated; minimum thickness 5 inch; fabricate of fewest layers possible.
      a. Minimum slope: 1/4 inch per foot.
      b. Sumps at drains: 4'-0" square; 1/2" per foot slope.
   6. Board Edges: Square.

B. Mineral Wool Board Insulation: Rigid, monolithic, dual-density mineral wool, ASTM C726, with the following characteristics:
   1. Board Size: 48 by 48 inches.
   2. Board Thickness: 2-1/2 inches.
   3. Board Edges: Square.
   4. Thermal Resistance: R-value of 3.8 deg F hr sq ft/Btu at 75 degrees F, when tested according to ASTM C518.
   5. Manufacturers:
      a. ROXUL, Inc; TOPROCK DD: www.roxul.com/#sle.

2.06 ACCESSORIES

A. Prefabricated Roofing Expansion Joint Flashing: Sheet butyl over closed-cell foam backing seamed to stainless steel flanges.

B. Stack Boots: Prefabricated flexible boot and collar for pipe stacks through membrane; same material as membrane.

C. Insulation Joint Tape: Glass fiber reinforced type as recommended by insulation manufacturer, compatible with roofing materials; 6 inches wide; self adhering.

D. Insulation Fasteners: Appropriate for purpose intended and approved by roofing manufacturer.

E. Thinners and Cleaners: As recommended by adhesive manufacturer, compatible with membrane.

F. Membrane Adhesive: As recommended by membrane manufacturer, and:
   1. Provide low-VOC, solvent-based EPDM bonding adhesive that complies with Ozone Transport Commission (OTC) Model Rule, Single Ply Roofing Adhesives; www.otcair.org.

G. Membrane Adhesive Primer: As recommended by membrane manufacturer, and:
   1. Provide low-VOC, solvent-based EPDM adhesive primer that complies with Ozone Transport Commission (OTC) Model Rule, Single Ply Roofing Adhesive Primers; www.otcair.org.

H. Insulation Adhesive: As recommended by insulation manufacturer.

I. Walkway Pads: Suitable for maintenance traffic, contrasting color or otherwise visually distinctive from roof membrane.
   1. Composition: Roofing membrane manufacturer's standard.
   2. Size: As indicated.

3. Surface Color: Black.

J.

PART 3 EXECUTION

3.01 EXAMINATION

A. Verify that surfaces and site conditions are ready to receive work.

B. Verify deck is supported and secure.

C. Verify deck is clean and smooth, flat, free of depressions, waves, or projections, properly sloped and suitable for installation of roof system.

D. Verify deck surfaces are dry and free of snow or ice.

E. Verify that roof openings, curbs, and penetrations through roof are solidly set, and cant strips are in place.

3.02 METAL DECK PREPARATION

A. Install preformed acoustical glass fiber insulation strips specified in Section 05 3100 within roof deck flutes. Install in accordance with manufacturer's instructions.

3.03 INSULATION - UNDER MEMBRANE

A. Attachment of Insulation: Mechanically fasten each layer of insulation to deck in accordance with roofing manufacturer's instructions and Factory Mutual requirements.

B. Lay subsequent layers of insulation with joints staggered minimum 6 inch from joints of preceding layer.

C. Place tapered insulation to the required slope pattern in accordance with manufacturer's instructions.

D. On metal deck, place boards parallel to flutes with insulation board edges bearing on deck flutes.

E. Lay boards with edges in moderate contact without forcing. Cut insulation to fit neatly to perimeter blocking and around penetrations through roof.

F. Tape joints of insulation in accordance with roofing and insulation manufacturers' instructions.

G. At roof drains, use factory-tapered boards to slope down to roof drains over a distance of 24 inches.

1. Trim surface of insulation where necessary at roof drains so completed surface is flush and does not restrict flow of water.

H. Do not apply more insulation than can be covered with membrane in same day.

I. Install cover board over insulation with long joints in continuous straight lines with end joints staggered between rows. Adhesive attach cover board, following manufacturer recommendations.

1. For multilayer locations, lay subsequent coverboard layers with joints staggered minimum 6 inch from joints of preceding layer.

3.04 MEMBRANE APPLICATION

A. Apply elastomeric membrane roofing system in accordance with manufacturer's recommendations.

B. Roll out membrane, free from wrinkles or tears. Place sheet into place without stretching.

C. Shingle joints on sloped substrate in direction of drainage.

D. Fully Adhered Application: Apply adhesive to substrate and membrane at rate required by manufacturer. Fully embed membrane in adhesive except in areas directly over or within 3 inches of expansion joints. Fully adhere one roll before proceeding to adjacent rolls.
   1. Protect white surface from discoloration from bonding adhesive.
   2. Do not place bonding adhesive containers or lids on white membrane surface.

E. Overlap edges and ends and seal seams by contact tape, minimum 6 inches. Seal permanently waterproof. Apply uniform bead of sealant to joint edge.

F. At intersections with vertical surfaces:
   1. Extend membrane over cant strips and up a minimum of 8 inches onto vertical surfaces.
   2. Fully adhere flexible flashing over membrane and up to termination bar.

G. Around roof penetrations, seal flanges and flashings with flexible flashing.

H. Install roofing expansion joints where indicated. Make joints watertight.
   1. Install prefabricated joint components in accordance with manufacturer's instructions.

I. Coordinate installation of roof drains and related flashings.

J. Coordinate installation of associated counterflashings installed under other sections.

3.05 ROOF WALKWAY INSTALLATION

A. Flexible Walkways: Install walkway products in locations indicated. Adhere walkway products to substrate with compatible adhesive according to roofing system manufacturer's written instructions.

3.06 FIELD QUALITY CONTROL

A. See Section 01 4000 - Quality Requirements, for general requirements for field quality control and inspection.

B. Require site attendance of roofing and insulation material manufacturers weekly during installation of the Work.

3.07 CLEANING

A. Remove markings from finished surfaces.

B. In areas where finished surfaces are soiled by work of this section, consult manufacturer of surfaces for cleaning advice and conform to their documented instructions.

C. Repair or replace defaced or damaged finishes caused by work of this section.

3.08 PROTECTION

A. Protect installed roofing and flashings from construction operations.

B. Where traffic must continue over finished roof membrane, protect surfaces using durable materials.

END OF SECTION

SECTION 07 6200
SHEET METAL FLASHING AND TRIM

PART 1 GENERAL

1.01 SECTION INCLUDES

A. Fabricated sheet metal items, including flashings and counterflashings.

B. Sealants for joints within sheet metal fabrications.

1.02 RELATED REQUIREMENTS

A. Section 04 2000 - Unit Masonry: Installation of flashing materials embedded in masonry.

B. Section 06 1000 - Rough Carpentry: Wood nailers for sheet metal work.

C. Section 07 2500 - Weather Barriers: Installation of weather barriers and interface with flashing materials.

D. Section 07 3113 - Asphalt Shingles: Non-metallic flashings associated with shingle roofing.

E. Section 07 7100 - Roof Specialties: Manufactured copings, flashings, and expansion joint covers.

F. Section 07 7200 - Roof Accessories: Manufactured metal roof curbs.

G. Section 07 9200 - Joint Sealants: Sealing non-lap joints between sheet metal fabrications and adjacent construction.

1.03 REFERENCE STANDARDS

A. ASTM A653/A653M - Standard Specification for Steel Sheet, Zinc-Coated (Galvanized) or Zinc-Iron Alloy-Coated (Galvannealed) by the Hot-Dip Process; 2015.

B. ASTM A666 - Standard Specification for Annealed or Cold-Worked Austenitic Stainless Steel Sheet, Strip, Plate, and Flat Bar; 2015.

C. ASTM B32 - Standard Specification for Solder Metal; 2008 (Reapproved 2014).

D. ASTM D2178/D2178M - Standard Specification for Asphalt Glass Felt Used in Roofing and Waterproofing; 2015a.

E. SMACNA (ASMM) - Architectural Sheet Metal Manual; 2012.

1.04 ADMINISTRATIVE REQUIREMENTS

A. Preinstallation Meeting: Convene one week before starting work of this section.

1.05 SUBMITTALS

A. See Section 01 3000 - Administrative Requirements, for submittal procedures.

B. Shop Drawings: Indicate material profile, jointing pattern, jointing details, fastening methods, flashings, terminations, and installation details.

C. Samples: Submit two samples 6 by 6 inch in size illustrating metal finish color.

1.06 QUALITY ASSURANCE

A. Perform work in accordance with SMACNA (ASMM) and CDA A4050 requirements and standard details, except as otherwise indicated.

B. Maintain one copy of each document on site.

C. Fabricator and Installer Qualifications: Company specializing in sheet metal work with 5 years of documented experience.

1.07 DELIVERY, STORAGE, AND HANDLING

A. Stack material to prevent twisting, bending, and abrasion, and to provide ventilation. Slope metal sheets to ensure drainage.

B. Prevent contact with materials that could cause discoloration or staining.

PART 2 PRODUCTS

2.01 SHEET MATERIALS

A. Stainless Steel: ASTM A666, Type 304 alloy, soft temper, 28 gage, (0.0156 inch) thick; smooth No. 4 - Brushed finish.

2.02 FLASHING TYPES

A. Flashing Type 1: 2-piece interlocking type:
   1. Material: Stainless steel.
   2. Configurations shall be as shown on drawings.
   3. Where cap flashings or counter flashings occur, they shall be of two-piece construction with a receiver having a special vertical locking slot that requires no malleting or bending to hold the insert member in place.
   4. Keyed or corrugated flashings are unacceptable.
   5. Fasteners, solder for sealing and attachment, etc., shall be as recommended by the manufacturer.
   6. Where flashings do not turn up behind walls, terminate with a 1/4" hook dam.
   7. Thru-wall flashings at parapets shall be hemmed flush with the exposed face of face brick.
   8. Fasteners, mastic for sealing and attachment, etc., shall be as recommended by the manufacturer.

B. Flashing Type 2: Masonry thru-wall type:
   1. Stainless steel core flexible flashing with drainage fabric:
      a. Product standard of quality: York Manufacturing, Inc.; York Flash-Vent SS,
      b. Accepted products:
         1) York Manufacturing, Inc.; York Flash-Vent SS, (www.yorkmfg.com)
         2) STS Coatings, Inc.; Wall Guardian TWF Stainless Steel (www.stscoatings.com)
         3) Building Materials West Company, Inc.; Evacu-Flash SS (www.evacu-flash.com)
   2. Configurations shall be as shown on drawings.
   3. Installation: Refer to Section 04 2000 - Unit Masonry.

C. Flashing Type 3: Membrane roofing base flashing material as specified in Section 07 5300 - Elastomeric Membrane Roofing .

D. Flashing Type 4: Formed metal flashing (Other than Type 1):
   1. Material: Stainless steel.
   2. Configurations shall be as shown on drawings.

2.03 ACCESSORIES

A. Fasteners: Stainless steel, with soft neoprene washers.

B. Outside corner and inside corner material; manufacturer’s standard available units using:
   1. Stainless steel: 26 gauge stainless steel.

C. End dam: Product may be folded in line with the flashing material or utilize preformed end dams by manufacturer using:

1. Stainless steel: 26 gauge stainless steel

D. Protective Backing Paint: Asphaltic mastic, ASTM D4479 Type I.

E. Sealant to be Concealed in Completed Work: Type 3 as specified in Section 07 9200.

F. Sealant to be Exposed in Completed Work: Type 1 as specified in Section 07 9200.

G. Reglets: Surface mounted type, galvanized steel; face and ends covered with plastic tape.

H. Termination Bars: 1 inch wide x 1/8 inch thick; stainless steel.

2.04 FABRICATION

A. Form sections true to shape, accurate in size, square, and free from distortion or defects.

B. Form pieces in longest possible lengths.

C. Hem exposed edges on underside 1/2 inch; miter and seam corners.

D. Form material with flat lock seams, except where otherwise indicated; at moving joints, use sealed lapped, bayonet-type or interlocking hooked seams.

E. Fabricate corners from one piece with minimum 18 inch long legs; seam for rigidity, seal with sealant.

F. Fabricate vertical faces with bottom edge formed outward 3/4 inch and hemmed to form drip.

G. Fabricate flashings to allow toe to extend 2 inches over roofing membrane. Return and brake edges.

PART 3 EXECUTION

3.01 EXAMINATION

A. Verify roof openings, curbs, pipes, sleeves, ducts, and vents through roof are solidly set, reglets in place, and nailing strips located.

B. Verify roofing termination and base flashings are in place, sealed, and secure.

3.02 PREPARATION

A. Install starter and edge strips, and cleats before starting installation.

B. Install surface mounted reglets true to lines and levels, and seal top of reglets with sealant.

C. Back paint concealed metal surfaces with protective backing paint to a minimum dry film thickness of 15 mil.

3.03 INSTALLATION

A. Conform to drawing details and to the following:
   1. SMACNA Architectural Sheet Metal Manual,

B. Insert flashings into reglets to form tight fit; secure in place with plastic wedges; seal flashings into reglets with sealant.

C. Secure flashings in place using concealed fasteners, and use exposed fasteners only where permitted..

D. Apply plastic cement compound between metal flashings and felt flashings.

E. Fit flashings tight in place; make corners square, surfaces true and straight in planes, and lines accurate to profiles.

F. Fasten cavity wall flashings to stud back-up with a non-corrosive termination bar and seal the top edge of the flashing with sealant.

G. Seal metal joints watertight.

3.04 FIELD QUALITY CONTROL

A. See Section 01 4000 - Quality Requirements, for field inspection requirements.

B. Inspection will involve surveillance of work during installation to ascertain compliance with specified requirements.

END OF SECTION

SECTION 07 7100
ROOF SPECIALTIES

PART 1 GENERAL

1.01 SECTION INCLUDES

A. Manufactured roof specialties, including copings.

B. Roof expansion joint covers.

1.02 RELATED REQUIREMENTS

A. Section 07 5300 - Elastomeric Membrane Roofing: Roof warranty requirements

B. Section 07 7200 - Roof Accessories: Manufactured curbs and roof hatches..

1.03 REFERENCE STANDARDS

A. ANSI/SPRI/FM 4435/ES-1 - Test Standard for Edge Systems Used with Low Slope Roofing Systems; 2017.

B. NRCA (RM) - The NRCA Roofing Manual; 2017.

1.04 SUBMITTALS

A. See Section 01 3000 - Administrative Requirements, for submittal procedures.

B. Product Data: Provide data on shape of components, materials and finishes, anchor types and locations.

C. Shop Drawings: Indicate configuration and dimension of components, adjacent construction, required clearances and tolerances, and other affected work.

D. Samples: Submit two appropriately sized samples of coping and expansion joint cover.

E. Manufacturer's Installation Instructions: Indicate special procedures, fasteners, supporting members, and perimeter conditions requiring special attention.

1.05 WARRANTY:

A. Provide a roofing manufacturer's full system warranty to include roof edge systems.

B. See Section 075300 for warranty requirements.

C. Provide a 20-year warranty for painted finishes, covering color fade, chalk and film integrity.

PART 2 PRODUCTS

2.01 MANUFACTURERS

A. Roof Edge Flashings and Copings:
   1. W.P. Hickman Company: www.wph.com.
   2. Metal-Era Inc: www.metalera.com.
   3. Substitutions: See Section 01 6000 - Product Requirements.

B. Expansion Joint Covers:
   1. GAF: www.gaf.com/sle.
   2. Johns Manville: www.jm.com.
   3. MM Systems Corp: www.mmsystemscorp.com.
   4. Substitutions: See Section 01 6000 - Product Requirements.

C. Pipe and Penetration Flashings:
   1. Portals Plus: www.portalsplus.com.
   2. Substitutions: See Section 01 6000 - Product Requirements.

2.02 COMPONENTS

A. Roof Edge Flashings: Factory fabricated to sizes required; mitered, welded corners; concealed fasteners.
   1. Configuration: Fascia, and edge securement for roof membrane.
   2. Pull-Off Resistance: Tested in accordance with ANSI/SPRI/FM 4435/ES-1 using test methods RE-1 and RE-2 to positive and negative design wind pressure as defined by applicable local building code.
   3. Material: Formed aluminum sheet, 0.050 inch thick, minimum.
   4. Color: To be selected by Architect from manufacturer's standard range.
   5. Manufacturers:
      a. W.P. Hickman Company; Terminedge EX: www.wph.com..
      b. Metal-Era, Inc., Anchor-Tite Fascia: www.metalera.com.
      c. Substitutions: See Section 01 6000 - Product Requirements.

B. Copings: Factory fabricated to sizes required; mitered, welded corners; concealed fasteners.
   1. Configuration: Concealed hold down cleat at both legs; internal splice piece at joints of same material, thickness and finish as cap; concealed stainless steel fasteners.
   2. Pull-Off Resistance: Tested in accordance with ANSI/SPRI/FM 4435/ES-1 using test method RE-3 to positive and negative design wind pressure as defined by applicable local building code.
   3. Material: Formed aluminum sheet, 0.050 inch thick, minimum.
   4. Finish: 70 percent polyvinylidene fluoride.
   5. Color: To be selected by Architect from manufacturer's full range.
   6. Manufacturers:
      a. W.P. Hickman Company; PermaSnap Coping: www.wph.com.
      b. Metal-Era, Inc., Perma-Tite Coping: www.metalera.com.
      c. Substitutions: See Section 01 6000 - Product Requirements.

C. Expansion Joint Covers: Composite construction of 6 inch wide flexible compatible flashing of white color with closed cell urethane foam backing, each edge seamed to aluminum sheet metal flanges, designed for nominal joint width of 1 inch. Include special formed corners, tees, intersections, and wall flashings, each sealed watertight.

D. Pipe and Penetration Flashing: Base of rounded aluminum, compatible with specified roof systems, and capable of accomodating pipes sized between 3/8 inch and 12 inch.

2.03 ACCESSORIES

A. Sealant for Joints in Linear Components: As recommended by component manufacturer.

B. Adhesive for Anchoring to Roof Membrane: Compatible with roof membrane and approved by roof membrane manufacturer.

2.04 FINISHES

A. PVDF (Polyvinylidene Fluoride) Coating: Superior Performance Organic Finish, AAMA 2605; multiple coat, thermally cured fluoropolymer finish system; color as indicated.

PART 3 EXECUTION

3.01 EXAMINATION

A. Verify that deck, curbs, roof membrane, base flashing, and other items affecting work of this Section are in place and positioned correctly.

3.02 INSTALLATION

A. Install components in accordance with manufacturer's instructions and NRCA (RM) applicable requirements.

B. Seal joints within components when required by component manufacturer.

C. Anchor components securely.

D. Coordinate installation of components of this section with installation of roofing membrane and base flashings.

E. Coordinate installation of sealants and roofing cement with work of this section to ensure water tightness.

END OF SECTION

SECTION 07 7123
MANUFACTURED GUTTERS AND DOWNSPOUTS

PART 1 GENERAL

1.01 SECTION INCLUDES

A. Pre-finished aluminum gutters and downspouts.

1.02 RELATED REQUIREMENTS

A. Section 07 3113 - Asphalt Shingles: Sloped roofing system.

B. Section 05 5000 - Metal Fabrications: Downspout boots.

1.03 REFERENCE STANDARDS

A. AAMA 2605 - Voluntary Specification, Performance Requirements and Test Procedures for Superior Performing Organic Coatings on Aluminum Extrusions and Panels (with Coil Coating Appendix); 2013.

B. ASTM B209 - Standard Specification for Aluminum and Aluminum-Alloy Sheet and Plate; 2014.

C. ASTM B209M - Standard Specification for Aluminum and Aluminum-Alloy Sheet and Plate (Metric); 2014.

D. CDA A4050 - Copper in Architecture - Handbook; current edition.

E. SMACNA (ASMM) - Architectural Sheet Metal Manual; 2012.

1.04 ADMINISTRATIVE REQUIREMENTS

A. Conform to SMACNA (ASMM) for sizing components for rainfall intensity determined by a storm occurrence of 1 in 5 years.

B. Conform to applicable code for size and method of rain water discharge.

1.05 SUBMITTALS

A. Product Data: Provide data on prefabricated components.

B. Shop Drawings: Indicate locations, configurations, jointing methods, fastening methods, locations, and installation details.

1.06 DELIVERY, STORAGE, AND HANDLING

A. Stack material to prevent twisting, bending, or abrasion, and to provide ventilation. Slope to drain.

B. Prevent contact with materials that could cause discoloration, staining, or damage.

PART 2 PRODUCTS

2.01 MANUFACTURERS

A. Gutters and Downspouts:
   1. SAF Perimeter Systems, a division of Southern Aluminum Finishing Company, Inc; Colonial Profile 6 Concealed Drain Gutter: www.saf.com/persys.
   2. Substitutions: See Section 01 6000 - Product Requirements.

2.02 MATERIALS

A. Pre-Finished Aluminum Sheet: ASTM B209 (ASTM B209M); 0.050 inch thick.
   1. Finish: Plain, shop pre-coated with PVDF (polyvinylidene fluoride) coating.
   2. Color: As selected from manufacturer's standard colors.

2.03 COMPONENTS

A. Gutters: Profile as indicated.

B. Downspouts: CDA Rectangular profile.

C. Anchors and Supports: Profiled to suit gutters and downspouts.
   1. Gutter Supports: Brackets.
   2. Downspout Supports: Brackets.

D. Fasteners: Stainless steel, with soft neoprene washers.

2.04 FABRICATION

A. Form gutters and downspouts of profiles and size indicated.

B. Fabricate with required connection pieces.

C. Form sections square, true, and accurate in size, in maximum possible lengths, free of distortion or defects detrimental to appearance or performance. Allow for expansion at joints.

D. Hem exposed edges of metal.

E. Fabricate gutter and downspout accessories; seal watertight.

2.05 FINISHES

A. Fluoropolymer Coating: Superior Performance Organic Finish, AAMA 2605; multiple coat, thermally cured fluoropolymer finish system; color as scheduled.

PART 3 EXECUTION

3.01 EXAMINATION

A. Verify existing conditions before starting work.

B. Verify that surfaces are ready to receive work.

3.02 PREPARATION

A. Paint concealed metal surfaces and surfaces in contact with dissimilar metals with protective backing paint to a minimum dry film thickness of 15 mil.

3.03 INSTALLATION

A. Install gutters, downspouts, and accessories in accordance with manufacturer's instructions.

B. Sheet Metal: Join lengths with formed seams sealed watertight. Flash and seal gutters to downspouts and accessories.

C. Slope gutters 1/16 inch per foot.

D. Connect downspouts to downspout boots at 24 inches above grade. Seal connection watertight.

END OF SECTION

SECTION 07 7200
ROOF ACCESSORIES

PART 1 GENERAL

1.01 SECTION INCLUDES

A. Manufactured curbs, equipment rails, and pedestals.

B. Roof hatches, manual and automatic operation, including smoke vents.

1.02 RELATED REQUIREMENTS

A. Section 07 5300 - Elastomeric Membrane Roofing

B. Section 07 7100 - Roof Specialties: Other manufactured roof items.

1.03 REFERENCE STANDARDS

A. 29 CFR 1910.23 - Ladders; current edition.

B. ASTM A653/A653M - Standard Specification for Steel Sheet, Zinc-Coated (Galvanized) or Zinc-Iron Alloy-Coated (Galvannealed) by the Hot-Dip Process; 2015.

C. FM (AG) - FM Approval Guide; current edition.

D. UL (DIR) - Online Certifications Directory; current listings at database.ul.com.

1.04 SUBMITTALS

A. Product Data: Manufacturer's data sheets on each product to be used.
   1. Preparation instructions and recommendations.
   2. Storage and handling requirements and recommendations.
   3. Installation methods.
   4. Maintenance requirements.
   5. For smoke hatches, submit evidence of approval by evaluation agency specified.

B. Shop Drawings: Submit dimensioned, project specific shop drawings for each type of roof-mounted item.

C. Certificate: For smoke hatches, provide certificate of approval from authority having jurisdiction.

D. Warranty Documentation:
   1. Submit manufacturer warranty.
   2. Ensure that forms have been completed in Owner's name and registered with manufacturer.

1.05 DELIVERY, STORAGE, AND HANDLING

A. Store products in manufacturer's unopened packaging until ready for installation.

B. Store products under cover and elevated above grade.

1.06 WARRANTY

A. Correct defective Work within a two year period after Date of Substantial Completion.

PART 2 PRODUCTS

2.01 MANUFACTURED CURBS

A. Manufactured Curbs, Equipment Rails, and Other Roof Mounting Assemblies: Factory-assembled hollow sheet metal construction with fully mitered and welded corners, integral counterflashing, internal reinforcing, and top side and edges formed to shed water.

1. Sheet Metal: Hot-dip zinc coated steel sheet complying with ASTM A653/A653M, SS Grade 33; G90 coating designation; 18 gage, 0.048 inch thick.
2. Manufacture curb bottom and mounting flanges for installation directly on roof deck, not on insulation; match slope and configuration of roof deck.
3. Provide the layouts and configurations indicated on the drawings.

B. Equipment Rails: Two-sided curbs in straight lengths, with top horizontal for equipment mounting.
1. Provide preservative treated wood nailers along top of rails.
2. Height Above Finished Roof Surface: 8 inches, minimum.
3. Height Above Roof Deck: 16 inches, minimum.

C. Pipe, Duct, and Conduit Mounting Pedestals: Vertical posts, minimum 8 inches square unless otherwise indicated.
1. Provide sliding channel welded along top edge with adjustable height steel bracket, manufactured to fit item supported.
2. Height Above Finished Roof Surface: 8 inches, minimum.
3. Height Above Roof Deck: 16 inches, minimum.

2.02 ROOF HATCHES, MANUAL AND AUTOMATIC OPERATION

A. Manufacturers - Roof Hatches:
1. Bilco Company; Model E-50TB: www.bilco.com/#sle.
2. Substitutions: See Section 01 6000 - Product Requirements.

B. Manufacturers - Smoke and Heat Vents:
1. Bilco Company: www.bilco.com/#sle.
   a. Type SH1: Model DSH 4896
   b. Type SH2 (Acoustical): Model ACDSH 4896
2. Substitutions: See Section 01 6000 - Product Requirements.

C. Roof Hatches and Smoke Vents, General: Factory-assembled steel frame and cover, complete with operating and release hardware.
1. Style: Provide flat metal covers unless otherwise indicated.
2. Mounting: Provide frames and curbs suitable for mounting conditions indicated on the drawings.
3. Sound Rated Hatches: minimum STC of 46.
4. Thermally Broken Hatches: Added insulation to frame and cover; available in all manufacturer's standard, single leaf sizes; special sizes available upon request
5. For Ladder Access: Single leaf; 36 by 36 inches.

D. Smoke and Heat Vents (Typical): Where "smoke" or "smoke/heat" operation is indicated, provide the following additional features and also include manual operation for access:
1. Smoke Release Mechanism: Automatic opening on melting of replaceable UL (DIR) listed fusible link at 165 deg F.
2. UL (DIR) or FM (AG) listed as automatically operated smoke and heat vent.

E. Smoke and Heat Vents (Stage): Where "smoke" or "smoke/heat" operation is indicated, provide the following additional features and also include manual operation for access:
1. Smoke Release Mechanism: Automatic opening on melting of replaceable UL (DIR) listed fusible link at 165 deg F.
2. UL (DIR) or FM (AG) listed as automatically operated smoke and heat vent.

3. Provide 120V, electrically operated curb-mounted resettable release mechanism. Include three-button push control station ('open', 'close', 'stop') for each smoke vent accessible from the stage floor, at location shown.
   a. Bilco Thermolatch II or equivalent product of other listed maufacturers.

F. Frames/Curbs: One-piece curb and frame with integral cap flashing to receive roof flashings; extended bottom flange to suit mounting.
1. Material: Galvanized steel, 14 gage, 0.0747 inch thick.
2. Finish: Factory prime paint.
3. Insulation: Manufacturer's standard; 1 inch rigid glass fiber, located on outside face of curb.

G. Metal Covers: Flush, insulated, hollow metal construction.
1. Capable of supporting 40 psf live load.
2. Material: Galvanized steel; outer cover 14 gage, 0.0747 inch thick, liner 22 gage, 0.03 inch thick.
3. Finish: Factory prime paint.
4. Insulation: Manufacturer's standard 1 inch rigid glass fiber.
5. Gasket: Neoprene, continuous around cover perimeter.

H. Safety Railing System (Roof Hatches): Manufacturer's standard accessory safety rail system mounted directly to curb.
1. Comply with 29 CFR 1910.23, with a safety factor of two.
2. Posts and Rails: Aluminum tube.
3. Gate: Same material as railing; automatic closing with latch.
4. Finish: Manufacturer's standard, factory applied finish.
5. Fasteners: Type 316 stainless steel.
6. Manufacturers:
   a. Bilco Company; Bil-Guard 2.0: www.bilco.com/#sle.
   b. Substitutions: See Section 01 6000 - Product Requirements.

I. Hardware: Steel, zinc coated and chromate sealed, unless otherwise indicated or required by manufacturer.
1. Lifting Mechanisms: Compression or torsion spring operator with shock absorbers that automatically opens upon release of latch; capable of lifting covers despite 10 psf load.
2. Hinges: Heavy duty pintle type.
3. Hold open arm with vinyl-coated handle for manual release.
4. Latch: Upon closing, engage latch automatically and reset manual release.
5. Manual Release: Pull handle on interior.
6. Smoke Hatches: Manual release operation not to disturb automatic release mechanisms; easy resetting by Owner's maintenance personnel; provide latch designed to prevent relatching unless the automatic release mechanism has been properly reset for automatic operation.
7. Locking: Padlock hasp on interior.

PART 3 EXECUTION

3.01 EXAMINATION

A. Do not begin installation until substrates have been properly prepared.

B. If substrate preparation is the responsibility of another installer, notify Architect of unsatisfactory preparation before proceeding.

3.02 PREPARATION

A. Clean surfaces thoroughly prior to installation.

B. Prepare surfaces using the methods recommended by the manufacturer for achieving the best result for the substrate under the project conditions.

3.03 INSTALLATION

A. Install in accordance with manufacturer's instructions, in manner that maintains roofing weather integrity.

3.04 PROTECTION

A. Protect installed products until completion of project.

B. Touch-up, repair or replace damaged products before Date of Substantial Completion.

END OF SECTION

SECTION 07 8100
APPLIED FIREPROOFING

PART 1 GENERAL

1.01 SECTION INCLUDES

A. Fireproofing of interior structural steel not exposed to damage or moisture.

B. Fireproofing of structural steel exposed to damage or moisture.

1.02 RELATED REQUIREMENTS

A. Section 05 1200 - Structural Steel Framing.

B. Section 07 8123 - Intumescent Mastic Fireproofing.

1.03 REFERENCE STANDARDS

A. ASTM E84 - Standard Test Method for Surface Burning Characteristics of Building Materials; 2016.

B. ASTM E605 - Standard Test Methods for Thickness and Density of Sprayed Fire-Resistive Material (SFRM) Applied to Structural Members; 1993 (Reapproved 2011).

C. ASTM E736 - Standard Test Method for Cohesion/Adhesion of Sprayed Fire-Resistive Materials Applied to Structural Members; 2000 (Reapproved 2011).

D. ASTM E760/E760M - Standard Test Method for Effect of Impact on Bonding of Sprayed Fire-Resistive Material Applied to Structural Members; 1992 (Reapproved 2015)e1.

E. ASTM E859 - Standard Test Method for Air Erosion of Sprayed Fire-Resistive Material (SFRM) Applied to Structural Members; 1993 (Reapproved 2011).

F. ASTM E937 - Standard Test Method for Corrosion of Steel by Sprayed Fire-Resistive Material (SFRM) Applied to Structural Members; 1993 (Reapproved 2011).

1.04 ADMINISTRATIVE REQUIREMENTS

A. Coordinate with placement of ceiling hanger tabs, mechanical component hangers, and electrical components.

B. Preinstallation Meeting: Convene one week before starting work of this section.

1.05 SUBMITTALS

A. Product Data: Provide data indicating product characteristics.

B. Test Reports: Reports from reputable independent testing agencies for proposed products, indicating compliance with specified criteria, conducted under conditions similar to those on project, for:
   1. Bond strength.
   2. Bond impact.
   3. Compressive strength.
   4. Fire tests using substrate materials similar those on project.

C. Manufacturer's Installation Instructions: Indicate special procedures.

D. Manufacturer's Certificate: Certify that sprayed-on fireproofing products meet or exceed requirements of contract documents.

1.06 QUALITY ASSURANCE

A. Manufacturer Qualifications: Company specializing in manufacturing products specified in this section, with not less than three years of documented experience.

B. Installer Qualifications: Company specializing in performing work of the type specified in this section, and:
   1. Approved by manufacturer.

1.07 FIELD CONDITIONS

A. Do not apply spray fireproofing when temperature of substrate material and surrounding air is below 40 degrees F or when temperature is predicted to be below said temperature for 24 hours after application.

B. Provide ventilation in areas to receive fireproofing during application and 24 hours afterward, to dry applied material.

C. Provide temporary enclosure to prevent spray from contaminating air.

1.08 WARRANTY

A. Correct defective Work within a one year period after Date of Substantial Completion.
   1. Include coverage for fireproofing to remain free from cracking, checking, dusting, flaking, spalling, separation, and blistering.
   2. Reinstall or repair failures that occur within warranty period.

PART 2 PRODUCTS

2.01 MANUFACTURERS

A. Sprayed-On Fireproofing:
   1. Carboline Company: www.carboline.com.
   2. GCP Applied Technologies: www.gcpat.com/fireproofing/#sle.
   3. Isolatek International Corp: www.isolatek.com/#sle.
   4. Substitutions: See Section 01 6000 - Product Requirements.

2.02 FIREPROOFING ASSEMBLIES

A. Provide assemblies as indicated on the drawings.

B. Provide UL fire-rated assemblies to hourly ratings as follows:
   1. Interior columns: 1 hour.
   2. Interior beams: 1 hour.
   3. Interior floors: 1 hour.
   4. Interior roof deck: 1 hour.

2.03 MATERIALS

A. Sprayed Fire-Resistive Material for Interior Applications: Manufacturer's standard factory mixed material, which when combined with water is capable of providing the indicated fire resistance, and conforming to the following requirements:
   1. Composition: Portland cement-based; not mineral fiber-based.
   2. Bond Strength: 1000 pounds per square foot, minimum, when tested in accordance with ASTM E736 when set and dry.
   3. Dry Density: 21 lb/cu ft, minimum, when tested in accordance with ASTM E605.
   4. Effect of Impact on Bonding: No cracking, spalling or delamination, when tested in accordance with ASTM E760.
   5. Corrosivity: No evidence of corrosion, when tested in accordance with ASTM E937.
   6. Air Erosion Resistance: Weight loss of 0.025 g/sq ft, maximum, when tested in accordance with ASTM E859 after 24 hours.
   7. Surface Burning Characteristics: Maximum flame spread index of 0 (zero) and maximum smoke developed index of 0 (zero), when tested in accordance with ASTM E84.

8. Products:
   a. GCP Applied Technologies; Monokote Z-106/HY: www.gcpat.com/fireproofing/#sle.
   b. Isolatek International Inc; Product Cafco Blaze-Shield HP: www.isolatek.com..
   c. Substitutions: See Section 01 6000 - Product Requirements.

2.04 ACCESSORIES

A. Primer Adhesive: Of type recommended by fireproofing manufacturer.

B. Metal Lath: Expanded metal lath; minimum 3.4 pounds per square foot, galvanized finish.

C. Water: Clean, potable.

PART 3 EXECUTION

3.01 EXAMINATION

A. Verify that surfaces are ready to receive fireproofing.

B. Verify that clips, hangers, supports, sleeves, and other items required to penetrate fireproofing are in place.

C. Verify that ducts, piping, equipment, or other items that would interfere with application of fireproofing have not been installed.

D. Verify that voids and cracks in substrate have been filled. Verify that projections have been removed where fireproofing will be exposed to view as a finish material.

3.02 PREPARATION

A. Perform tests as recommended by fireproofing manufacturer in situations where adhesion of fireproofing to substrate is in question.

B. Remove incompatible materials that could affect bond by scraping, brushing, scrubbing, or sandblasting.

C. Prepare substrates to receive fireproofing in strict accordance with instructions of fireproofing manufacturer.

D. Protect surfaces not scheduled for fireproofing and equipment from damage by overspray, fall-out, and dusting.

E. Close off and seal duct work in areas where fireproofing is being applied.

3.03 APPLICATION

A. Install metal lath over structural members as indicated or as required by UL Assembly Design Numbers.

B. Apply primer adhesive in accordance with manufacturer's instructions.

C. Apply fireproofing in thickness and density necessary to achieve required ratings, with uniform density and texture.

D. Coordinate with intumescent fireproofing application for complete coverage.
   1. Refer to Section 07 8123.

3.04 FIELD QUALITY CONTROL

A. See Section 01 4000 - Quality Requirements, for additional requirements.

B. Inspect the installed fireproofing after application and curing for integrity, prior to its concealment. Ensure that actual thicknesses, densities, and bond strengths meet requirements for specified ratings and requirements of the Authority Having Jurisdiction.

C. Re-inspect the installed fireproofing for integrity of fire protection, after installation of subsequent Work.

3.05 CLEANING

A. Remove excess material, overspray, droppings, and debris.

B. Remove fireproofing from materials and surfaces not required to be fireproofed.

END OF SECTION

SECTION 07 8123
INTUMESCENT MASTIC FIREPROOFING

PART 1 GENERAL

1.01 SECTION INCLUDES

A. Thin-film intumescent fire resistive coatings for exposed structural steel.

1.02 RELATED REQUIREMENTS

A. Section 05 1200 - Structural Steel Framing.

B. Section 05 2100 - Steel Joist Framing.

C. Section 07 8100 - Applied Fireproofing: Conventional cementitious fireproofing.

1.03 REFERENCE STANDARDS

A. ASTM E119 - Standard Test Methods for Fire Tests of Building Construction and Materials; 2016a.

B. SSPC-PA 2 - Procedure For Determining Conformance To Dry Coating Thickness Requirements; 2015.

1.04 SUBMITTALS

A. See Section 01 3000 - Administrative Requirements, for submittals procedures.

B. Product Data: Manufacturer's data sheets on each product to be used, including:
   1. Performance characteristics and test results.
   2. Preparation instructions and recommendations.
   3. Storage and handling requirements and recommendations.
   4. Installation methods.

C. Test Reports: Published fire resistive designs for structural elements of the types required for the project, indicating hourly ratings of each assembly.

D. Certificates: Certify that intumescent fireproofing provided for this project meets or exceeds specified requirements in all respects.

1.05 QUALITY ASSURANCE

A. Manufacturer Qualifications: Company that specializes in manufacturing the type of products specified, with minimum of 10 years of documented experience.

B. Installer Qualifications: Approved, certified, or supervised by manufacturer of intumescent fireproofing, with not less than 5 years of documented experience.

1.06 DELIVERY, STORAGE, AND HANDLING

A. Deliver materials in manufacturer’s original, unopened containers with identification labels and testing agency markings intact and legible.

B. Store products in manufacturer's unopened packaging until ready for installation.
   1. Store at temperatures not less than 50 degrees F in dry, protected area.
   2. Protect from freezing, and do not store in direct sunlight.
   3. Dispose of any materials that have come into contact with contaminants of any kind prior to application.

C. Dispose of solvent-based materials, and materials used with solvent-based materials, in accordance with requirements of local authorities having jurisdiction.

1.07 FIELD CONDITIONS

A. Protect areas of application from windblown dust and rain.

B. Maintain ambient field conditions (temperature, humidity, and ventilation) within limits recommended by manufacturer for optimum results. Do not install products under ambient conditions outside manufacturer's absolute limits.
   1. Provide temporary enclosures as required to control ambient conditions.
   2. Do not apply intumescent fireproofing when ambient temperatures are below 50 degrees F without specific approval from manufacturer.
   3. Maintain relative humidity between 40 and 60 percent in areas of application.
   4. Maintain ventilation in enclosed spaces during application and for not less than 72 hours afterward.

PART 2 PRODUCTS

2.01 MANUFACTURERS

A. Intumescent Fireproofing:
   1. Carboline Company; A/D Firefilm III: www.carboline.com/#sle.
   2. Hilti, Inc; Fire Finish Steel Protection Spray CFP-SP WB: www.us.hilti.com/#sle.
   3. Isolatek International Corp; CAFCO SprayFilm WB 3 (interior): www.isolatek.com/#sle.
   4. Substitutions: See Section 01 6000 - Product Requirements.

2.02 SYSTEM REQUIREMENTS

A. Fireproofing: Provide intumescent thin-film fire resistive coating systems tested by an independent testing agency in accordance with ASTM E119 and acceptable to authorities having jurisdiction (AHJ).
   1. Provide assemblies listed by UL or FM and bearing listing agency label or mark.

B. Structural Steel Columns: Fire resistance rating of 1 hour.

C. Structural Steel Beams: Fire resistance rating of 1 hour.

2.03 MATERIALS

A. Fire Resistive Coating System: Thin film intumescent coating system for the fire protection of structural steel.
   1. For Interior Use:
      a. Use only water-based products.
      b. Use only products without fiber content.
      c. Basis of Design: Carboline Company; FIREFILM III.
      d. Substitutions: See Section 01 6000 - Product Requirements.

B. Protective and Decorative Top Coating for exposed conditions: As recommended by fireproofing manufacturer for exposure conditions.
   1. Coordinate with paint specified in Section 09 9000 for color and sheen match between steel coated with intumescent coating and adjacent painted surfaces.

C. Sealers and Primer: As required by tested and listed assemblies, and as recommended by fireproofing manufacturer to suit specific substrate conditions.

PART 3 EXECUTION

3.01 EXAMINATION

A. Examine substrates to determine if they are in satisfactory condition to receive intumescent fireproofing. Verify that they are clean and free of oil, grease, incompatible primers, or other foreign substances capable of impairing bond to fireproofing system.

B. Do not begin installation until substrates have been properly prepared. If substrate preparation is the responsibility of another installer, notify Architect of unsatisfactory preparation before proceeding.

3.02 PREPARATION

A. Thoroughly clean surfaces to receive fireproofing.

B. Repair substrates to remove surface imperfections that could affect uniformity of texture and thickness of fireproofing system. Remove minor projections and fill voids that could telegraph through the finished work.

C. Cover or otherwise protect other work that might be damaged by fallout or overspray of fireproofing system. Provide temporary enclosures as necessary to confine operations and maintain required ambient field conditions.

3.03 INSTALLATION

A. Comply with manufacturer's instructions for particular conditions of installation in each case.

B. Apply manufacturer’s recommended primer to required coating thickness.

C. Apply fireproofing to full thickness over entire area of each substrate to be protected. Apply coats at manufacturer’s recommended rate to achieve dry film thickness required for fire resistance ratings designated for each condition.

D. Apply intumescent fireproofing by spraying to maximum extent possible. If necessary, complete coverage by roller application or other method acceptable to manufacturer.

E. Achieve uniform finished appearance complying with approved mock-up.

3.04 FIELD QUALITY CONTROL

A. Perform field inspection and testing in accordance with Section 01 4000 - Quality Requirements.

B. Arrange for testing of installed intumescent fireproofing by an independent testing laboratory using magnetic thickness gage, in accordance with SSPC-PA 2.
   1. Submit test reports promptly to Contractor and Architect.

C. Repair or replace fireproofing at locations where test results indicate fireproofing does not meet specified requirements.

3.05 CLEANING

A. Immediately after installation of fireproofing in each area, remove overspray and fallout from other surfaces and clean soiled areas.

3.06 PROTECTION

A. Protect installed intumescent fireproofing from damage due to subsequent construction activities, so fireproofing is without damage or deterioration before Date of Substantial Completion.

B. Touch-up, repair or replace damaged products before Date of Substantial Completion.

3.07 SCHEDULE

A. Locations:
   1. Tube steel columns and beams in Area 'C'

END OF SECTION

SECTION 07 8400
FIRESTOPPING

PART 1 GENERAL

1.01 SECTION INCLUDES

A. Firestopping systems.

B. Firestopping of all joints and penetrations in fire resistance rated and smoke resistant assemblies, whether indicated on drawings or not, and other openings indicated.

1.02 RELATED REQUIREMENTS

A. Section 07 8100 - Applied Fireproofing.

B. Section 09 2116 - Gypsum Board Assemblies: Gypsum wallboard fireproofing.

1.03 REFERENCE STANDARDS

A. ASTM E119 - Standard Test Methods for Fire Tests of Building Construction and Materials; 2016a.

B. ASTM E814 - Standard Test Method for Fire Tests of Penetration Firestop Systems; 2013a.

C. ASTM E1966 - Standard Test Method for Fire Resistive Joint Systems; 2007 (Reapproved 2011).

D. ASTM E2174 - Standard Practice for On-Site Inspection of Installed Firestops; 2014b.

E. ASTM E2393 - Standard Practice for On-Site Inspection of Installed Fire Resistive Joint Systems and Perimeter Fire Barriers; 2010a (Reapproved 2015).

F. ASTM E2307 - Standard Test Method for Determining Fire Resistance of Perimeter Fire Barriers Using Intermediate-Scale, Multi-story Test Apparatus; 2015b.

G. ASTM E2837 - Standard Test Method for Determining the Fire Resistance of Continuity Head-of-Wall Joint Systems Installed Between Rated Wall Assemblies and Nonrated Horizontal Assemblies; 2013.

H. ASTM G21 - Standard Practice for Determining Resistance of Synthetic Polymeric Materials to Fungi; 2015.

I. ITS (DIR) - Directory of Listed Products; current edition.

J. FM (AG) - FM Approval Guide; current edition.

K. UL 1479 - Standard for Fire Tests of Penetration Firestops; Current Edition, Including All Revisions.

L. UL 2079 - Standard for Tests for Fire Resistance of Building Joint Systems; Current Edition, Including All Revisions.

M. UL (DIR) - Online Certifications Directory; current listings at database.ul.com.

N. UL (FRD) - Fire Resistance Directory; current edition.

1.04 SUBMITTALS

A. Schedule of Firestopping: List each type of penetration, fire rating of the penetrated assembly, and firestopping test or design number.

B. Product Data: Provide data on product characteristics, performance ratings, and limitations.

C. Manufacturer's Installation Instructions: Indicate preparation and installation instructions.

D. Manufacturer's Certificate: Certify that products meet or exceed specified requirements.

1.05 QUALITY ASSURANCE

A. Fire Testing: Provide firestopping assemblies of designs that provide the scheduled fire ratings when tested in accordance with methods indicated.
   1. Listing in UL (FRD) or FM (AG) will be considered as constituting an acceptable test report.
   2. Valid evaluation report published by ICC Evaluation Service, Inc. (ICC-ES) at www.icc-es.org will be considered as constituting an acceptable test report.

B. Manufacturer Qualifications: Company specializing in manufacturing the products specified in this section with minimum three years documented experience.

C. Installer Qualifications: Company specializing in performing the work of this section and:
   1. Trained by manufacturer.
   2. Verification of minimum three years documented experience installing work of this type.

1.06 FIELD CONDITIONS

A. Comply with firestopping manufacturer's recommendations for temperature and conditions during and after installation. Maintain minimum temperature before, during, and for 3 days after installation of materials.

PART 2 PRODUCTS

2.01 MANUFACTURERS

A. Firestopping Manufacturers:
   1. 3M Fire Protection Products: www.3m.com/firestop.
   2. Hilti, Inc: www.us.hilti.com/#sle.
   3. Nelson FireStop Products: www.nelsonfirestop.com.
   4. Specified Technologies Inc: www.stifirestop.com/#sle.
   5. Substitutions: See Section 01 6000 - Product Requirements.

2.02 MATERIALS

A. Firestopping Materials: Any materials meeting requirements.

B. Mold and Mildew Resistance: Provide firestoppping materials with mold and mildew resistance rating of zero(0) in accordance with ASTM G21.

C. Primers, Sleeves, Forms, Insulation, Packing, Stuffing, and Accessories: Provide type of materials as required for tested firestopping assembly.

D. Fire Ratings: Refer to drawings for required systems and ratings.

2.03 FIRESTOPPING ASSEMBLY REQUIREMENTS

A. General:
   1. Provide firestopping composed of components that are compatible with each other, the substrates forming openings, and the items, if any, penetrating the firestopping under conditions of service and application, as demonstrated by the firestopping manufacturer based on testing and field experience.
   2. Provide components for each firestopping system that are needed to install fill material. Use only components specified by the firestopping manufacturer and approved by the qualified testing agency for the designated fire-resistance-rated systems.

B. Perimeter Fire Containment Firestopping: Use any system that has been tested according to ASTM E2307 to have fire resistance F Rating equal to required fire rating of the floor assembly.

1. Where floor assembly is not required to have a fire rating, provide systems that have been tested to show L Rating as indicated.

C. Head-of-Wall Joint System Firestopping at Joints Between Fire-Rated Wall Assemblies and Non-Rated Horizontal Assemblies: Use any system that has been tested according to ASTM E2837 to have fire resistance F Rating equal to required fire rating of floor or wall, whichever is greater.
   1. Movement: In addition, provide systems that have been tested to show movement capability as indicated.

D. Floor-to-Floor, Wall-to-Wall, and Wall-to-Floor Joints, Except Perimeter, Where Both Are Fire-Rated: Use any system that has been tested according to ASTM E1966 or UL 2079 to have fire resistance F Rating equal to required fire rating of the assembly in which the joint occurs.
   1. Listing by FM (AG), ITS (DIR), UL (DIR), or UL (FRD) in their certification directories will be considered evidence of successful testing.

E. Through Penetration Firestopping: Use any system that has been tested according to ASTM E814 to have fire resistance F Rating equal to required fire rating of penetrated assembly.
   1. Temperature Rise: Where penetration is not contained in a wall cavity, provide systems that have been tested to show T Rating equal to F Rating, where required by code.
   2. Listing by FM (AG), ITS (DIR), UL (DIR), or UL (FRD) in their certification directories will be considered evidence of successful testing.

2.04 FIRESTOPPING SYSTEMS

A. Firestopping: Any material meeting requirements.
   1. Fire Ratings: Use any system that is listed by FM (AG), ITS (DIR), or UL (FRD) and tested in accordance with ASTM E814, ASTM E119, or UL 1479 with F Rating equal to fire rating of penetrated assembly and minimum T Rating Equal to F Rating and in compliance with other specified requirements.

PART 3 EXECUTION

3.01 EXAMINATION

A. Verify openings are ready to receive the work of this section.

3.02 PREPARATION

A. Clean substrate surfaces of dirt, dust, grease, oil, loose material, or other matter that could adversely affect bond of firestopping material.

B. Remove incompatible materials that could adversely affect bond.

C. Install backing materials to arrest liquid material leakage.

3.03 COORDINATION

A. Coordinate construction of openings, penetrations and construction joints to ensure that the fire stop systems are installed according to specified requirements.

B. Coordinate sizing of sleeves, openings, core-drilled holes, or cut openings to accommodate through-penetration fire stop systems. Coordinate construction and sizing of joints to ensure that fire-resistive joint systems are installed according to specified requirements.

C. Coordinate fire stopping with other trades so that obstructions are not placed in the way prior to the installation of the fire stop systems.

D. Consult with mechanical engineer, project manager, and damper manufacturer prior to installation of UL firestop systems that might hamper the performance of fire dampers as it pertains to duct work.

3.04 INSTALLATION

A. Install materials in manner described in fire test report and in accordance with manufacturer's instructions, completely closing openings.

B. Do not cover installed firestopping until inspected by authorities having jurisdiction.

C. Install labeling required by code.

3.05 FIELD QUALITY CONTROL

A. Independent Testing Agency: Inspection agency employed and paid by Owner, will examine penetration firestopping in accordance with ASTM E2174, and ASTM E2393.

B. Repair or replace penetration firestopping and joints at locations where inspection results indicate firestopping or joints do not meet specified requirements.

3.06 CLEANING

A. Clean adjacent surfaces of firestopping materials.

3.07 PROTECTION

A. Protect adjacent surfaces from damage by material installation.

END OF SECTION

SECTION 07 9200
JOINT SEALANTS

PART 1 GENERAL

1.01 SECTION INCLUDES

A. Nonsag gunnable joint sealants.

B. Joint backings and accessories.

1.02 RELATED REQUIREMENTS

A. Section 07 1300 - Sheet Waterproofing: Sealing cracks and joints in waterproofing substrate surfaces using materials specified in this section.

B. Section 07 2500 - Weather Barriers: Sealants required in conjunction with air barriers and vapor retarders.

C. Section 07 8400 - Firestopping: Firestopping sealants.

D. Section 08 7100 - Door Hardware: Setting exterior door thresholds in sealant.

E. Section 08 8000 - Glazing: Glazing sealants and accessories.

F. Section 09 2116 - Gypsum Board Assemblies: Sealing acoustical and sound-rated walls and ceilings.

G. Section 09 2216 - Non-Structural Metal Framing: Sealing between framing and adjacent construction in acoustical and sound-rated walls and ceilings.

H. Section 09 3000 - Tiling: Sealant between tile and plumbing fixtures and at junctions with other materials and changes in plane.

1.03 REFERENCE STANDARDS

A. ASTM C661 - Standard Test Method for Indentation Hardness of Elastomeric-Type Sealants by Means of a Durometer; 2006 (Reapproved 2011).

B. ASTM C834 - Standard Specification for Latex Sealants; 2014.

C. ASTM C919 - Standard Practice for Use of Sealants in Acoustical Applications; 2012.

D. ASTM C920 - Standard Specification for Elastomeric Joint Sealants; 2014a.

E. ASTM C1193 - Standard Guide for Use of Joint Sealants; 2016.

F. ASTM C1248 - Standard Test Method for Staining of Porous Substrate by Joint Sealants; 2008 (Reapproved 2012).

G. ASTM C1311 - Standard Specification for Solvent Release Sealants; 2014.

H. ASTM C1330 - Standard Specification for Cylindrical Sealant Backing for Use with Cold Liquid-Applied Sealants; 2002 (Reapproved 2013).

I. ASTM C1521 - Standard Practice for Evaluating Adhesion of Installed Weatherproofing Sealant Joints; 2013.

1.04 SUBMITTALS

A. Product Data for Sealants: Submit manufacturer's technical data sheets for each product to be used, that includes the following.
   1. Physical characteristics, including movement capability, VOC content, hardness, cure time, and color availability.
   2. List of backing materials approved for use with the specific product.

3. Substrates that product is known to satisfactorily adhere to and with which it is compatible.
4. Substrates the product should not be used on.

B. Product Data for Accessory Products: Submit manufacturer's technical data sheet for each product to be used, including physical characteristics, installation instructions, and recommended tools.

C. Color Cards for Selection: Where sealant color is not specified, submit manufacturer's color cards showing standard colors available for selection.

D. Samples for Verification: Where custom sealant color is specified, obtain directions from Architect and submit at least two physical samples for verification of color of each required sealant.

E. Preinstallation Field Adhesion Test Plan: Submit at least two weeks prior to start of installation.

F. Field Quality Control Plan: Submit at least two weeks prior to start of installation.

G. Preinstallation Field Adhesion Test Reports: Submit filled out Preinstallation Field Adhesion Test Reports log within 10 days after completion of tests; include bagged test samples and photographic records.

H. Field Quality Control Log: Submit filled out log for each length or instance of sealant installed, within 10 days after completion of inspections/tests; include bagged test samples and photographic records, if any.

1.05 QUALITY ASSURANCE

A. Manufacturer Qualifications: Company specializing in manufacturing the products specified in this section with minimum three years documented experience.

B. Installer Qualifications: Company specializing in performing the work of this section and with at least three years of documented experience.

C. Testing Agency Qualifications: Independent firm specializing in performing testing and inspections of the type specified in this section.

D. Preinstallation Field Adhesion Test Plan: Include destructive field adhesion testing of one sample of each combination of sealant type and substrate, except interior acrylic latex sealants, and include the following for each tested sample.
1. Identification of testing agency.
2. Preinstallation Field Adhesion Test Log Form: Include the following data fields, with known information filled out.
   a. Test date.
   b. Copy of test method documents.
   c. Age of sealant upon date of testing.
   d. Test results, modeled after the sample form in the test method document.
   e. Indicate use of photographic record of test.

E. Field Quality Control Plan:
1. Visual inspection of entire length of sealant joints.
2. Non-destructive field adhesion testing of sealant joints, except interior acrylic latex sealants.
3. Destructive field adhesion testing of sealant joints, except interior acrylic latex sealant.

a. For each different sealant and substrate combination, allow for one test every 100 feet in the first 1000 linear feet, and one test per 1000 linear feet thereafter, or once per floor on each elevation.
b. If any failures occur in the first 1000 linear feet, continue testing at frequency of one test per 500 linear feet at no extra cost to Owner.

4. Field testing agency's qualifications.
5. Field Quality Control Log Form: Show same data fields as on Preinstallation Field Adhesion Test Log, with known information filled out and lines for multiple tests per sealant/substrate combinations; include visual inspection and specified field testing; allow for possibility that more tests than minimum specified may be necessary.

F. Field Adhesion Test Procedures:
1. Allow sealants to fully cure as recommended by manufacturer before testing.
2. Have a copy of the test method document available during tests.
3. Record the type of failure that occurred, other information required by test method, and the information required on the Field Quality Control Log.
4. When performing destructive tests, also inspect the opened joint for proper installation characteristics recommended by manufacturer, and report any deficiencies.
5. Deliver the samples removed during destructive tests in separate sealed plastic bags, identified with project, location, test date, and test results, to Owner.
6. If any combination of sealant type and substrate does not show evidence of minimum adhesion or shows cohesion failure before minimum adhesion, report results to Architect.

G. Non-Destructive Field Adhesion Test: Test for adhesion in accordance with ASTM C1521, using Nondestructive Spot Method.

H. Destructive Field Adhesion Test: Test for adhesion in accordance with ASTM C1521, using Destructive Tail Procedure.
1. Sample: At least 18 inch long.
2. Minimum Elongation Without Adhesive Failure: Consider the tail at rest, not under any elongation stress; multiply the stated movement capability of the sealant in percent by two; then multiply 1 inch by that percentage; if adhesion failure occurs before the "1 inch mark" is that distance from the substrate, the test has failed.
3. If either adhesive or cohesive failure occurs prior to minimum elongation, take necessary measures to correct conditions and re-test; record each modification to products or installation procedures.

1.06 WARRANTY

A. Correct defective work within a five year period after Date of Substantial Completion.

B. Warranty: Include coverage for installed sealants and accessories that fail to achieve watertight seal , exhibit loss of adhesion or cohesion, or do not cure.

PART 2 PRODUCTS

2.01 JOINT SEALANT APPLICATIONS

A. Scope:
1. Exterior Joints: Seal open joints, whether or not the joint is indicated on the drawings, unless specifically indicated not to be sealed. Exterior joints to be sealed include, but are not limited to, the following items.
a. Wall expansion and control joints.
b. Joints between door, window, and other frames and adjacent construction.
c. Joints between different exposed materials.

d. Openings below ledge angles in masonry.
e. Other joints indicated below.

2. Interior Joints: Do not seal interior joints unless specifically indicated to be sealed. Interior joints to be sealed include, but are not limited to, the following items.
   a. Joints between door, window, and other frames and adjacent construction.
   b. Joints between plumbing fixtures and adjacent construction.
3. In sound-rated wall and ceiling assemblies, gaps at electrical outlets, wiring devices, piping, and other openings; between wall/ceiling and other construction; and other flanking sound paths.
4. Do not seal the following types of joints.
   a. Intentional weepholes in masonry.
   b. Joints indicated to be treated with manufactured expansion joint cover or some other type of sealing device.
   c. Joints where sealant is specified to be provided by manufacturer of product to be sealed.
   d. Joints where installation of sealant is specified in another section.
   e. Joints between suspended panel ceilings/grid and walls.

B. Exterior Joints: Use non-sag non-staining silicone sealant, Type 1, unless otherwise indicated.

C. Interior Joints: Use non-sag acrylic latex sealant, Type 2, unless otherwise indicated.
1. Interior Expansion and Control Joints: Polyurethane sealant; Type 1A.
2. Interior Joints at windows, storefront and curtainwall: Polyurethane sealant; Type 1A.
3. Fire-rated Construction: ASTM C 834, UL Listed.
4. In Sound-Rated Assemblies: Acoustical sealant; Type 5.
5. Interior Wet Areas: Type 6 - Mildew-Resistant Silicone Sealant: not expected to withstand continuous water immersion or traffic. Bathrooms, restrooms, kitchens, food service areas, and food processing areas; fixtures in wet areas include plumbing fixtures, food service equipment, countertops, cabinets, and other similar items.

2.02 JOINT SEALANTS - GENERAL

A. Sealant Types Summary:
1. Type 1: Non-Staining Silicone.
2. Type 1A: Polyurethane.
3. Type 2: Acrylic Emulsion Latex
4. Type 3: Non-Curing Butyl Sealant
5. Type 4: Fire resistant foam sealant: Refer to Section 07 8400 - Firestopping.
6. Type 5: Acoustical Sealant
7. Type 6: Mildew-Resistant Silicone Sealant

2.03 NONSAG JOINT SEALANTS

A. Type 1 - Non-Staining Silicone Sealant: ASTM C920, Grade NS, Uses M and A; not expected to withstand continuous water immersion or traffic.
1. Movement Capability: Plus and minus 50 percent, minimum.
2. Non-Staining To Porous Stone: Non-staining to light-colored natural stone when tested in accordance with ASTM C1248.
3. Dirt Pick-Up: Reduced dirt pick-up compared to other silicone sealants.
4. Color: To be selected by Architect from manufacturer's standard range.
5. Cure Type: Single-component, neutral moisture curing.
6. Service Temperature Range: Minus 65 to 180 degrees F.

7. Manufacturers:
    a. Dow Corning Corporation; 795 Silicone Building Sealant: www.dowcorning.com/construction/sle.
    b. Sika Corporation; Sikasil WS-295: www.usa-sika.com.
    c. Pecora Corporation; 890NST: www.pecora.com.
    d. Substitutions: See Section 01 6000 - Product Requirements.

B. Type 1A - Polyurethane Sealant: ASTM C920, Grade NS, Uses M and A; single component; not expected to withstand continuous water immersion or traffic.
1. Movement Capability: Plus and minus 25 percent, minimum.
2. Hardness Range: 20 to 35, Shore A, when tested in accordance with ASTM C661.
3. Color: To be selected by Architect from manufacturer's standard range.
4. Service Temperature Range: Minus 40 to 180 degrees F.
5. Manufacturers:
    a. Pecora Corporation; DynaTrol 1-XL: www.pecora.com.
    b. Sika Corporation; Sikaflex-15 LM: www.usa-sika.com.
    c. Tremco Commercial Sealants & Waterproofing; Dymonic 100: www.tremcosealants.com/#sle.
    d. Substitutions: See Section 01 6000 - Product Requirements.

C. Type 2 - Acrylic Emulsion Latex: Water-based; ASTM C834, single component, non-staining, non-bleeding, non-sagging; not intended for exterior use.

D. Type 3 - Non-Curing Butyl Sealant: Solvent-based; ASTM C1311; single component, non-sag, non-skinning, non-hardening, non-bleeding; vapor-impermeable; intended for fully concealed applications.

E. Type 4: Fire resistant foam sealant: Refer to Section 07 8400 - Firestopping.

F. Type 5 - Acoustical Sealant for Concealed Locations: ASTM C 834, UL Listed.
1. Composition: Acrylic latex emulsion sealant.
2. Applications: Use for concealed locations only:
    a. Acoustical application: Sealant bead between top stud runner and structure and between bottom stud track and floor.
3. Products:
    a. Pecora Corporation; AC-20 FTR Acoustical and Insulation Sealant: www.pecora.com.
    b. Hilti, Inc.; CP 506 Smoke and Acoustical Sealant: www.us.hilti.com.
    c. USG Company; Sheetrock Brand Acoustical Sealant; www.usg.com.

G. Type 6 - Mildew-Resistant Silicone Sealant: ASTM C920, Grade NS, Uses M and A; single component, mildew resistant; not expected to withstand continuous water immersion or traffic.
1. Color: White.
2. Manufacturers:
    a. Pecora Corporation: www.pecora.com.
    b. Sika Corporation; Sikasil GP: www.usa-sika.com.

2.04 ACCESSORIES

A. Backer Rod: Cylindrical cellular foam rod with surface that sealant will not adhere to, compatible with specific sealant used, and recommended by backing and sealant manufacturers for specific application.
1. Type for Joints Not Subject to Pedestrian or Vehicular Traffic: ASTM C1330; Type B - Bi-Cellular Polyethylene.

2. Closed Cell and Bi-Cellular: 25 to 33 percent larger in diameter than joint width.
3. Manufacturers:
   a. Nomaco, Inc; SOF Rod: www.nomaco.com.

B. Backing Tape: Self-adhesive polyethylene tape with surface that sealant will not adhere to and recommended by tape and sealant manufacturers for specific application.

C. Masking Tape: Self-adhesive, nonabsorbent, non-staining, removable without adhesive residue, and compatible with surfaces adjacent to joints and sealants.

D. Joint Cleaner: Non-corrosive and non-staining type, type recommended by sealant manufacturer; compatible with joint forming materials.

E. Primers: Type recommended by sealant manufacturer to suit application; non-staining.

PART 3 EXECUTION

3.01 EXAMINATION

A. Verify that joints are ready to receive work.

B. Verify that backing materials are compatible with sealants.

C. Verify that backer rods are of the correct size.

D. Preinstallation Adhesion Testing: Install a sample for each test location indicated in the test plan.
   1. Test each sample as specified in PART 1 under QUALITY ASSURANCE article.
   2. Notify Architect of date and time that tests will be performed, at least 7 days in advance.
   3. Record each test on Preinstallation Adhesion Test Log as indicated.
   4. If any sample fails, review products and installation procedures, consult manufacturer, or take whatever other measures are necessary to ensure adhesion; re-test in a different location; if unable to obtain satisfactory adhesion, report to Architect.
   5. After completion of tests, remove remaining sample material and prepare joint for new sealant installation.

3.02 PREPARATION

A. Remove loose materials and foreign matter that could impair adhesion of sealant.

B. Clean joints, and prime as necessary, in accordance with manufacturer's instructions.

C. Perform preparation in accordance with manufacturer's instructions and ASTM C1193.

D. Mask elements and surfaces adjacent to joints from damage and disfigurement due to sealant work; be aware that sealant drips and smears may not be completely removable.

3.03 INSTALLATION

A. Perform work in accordance with sealant manufacturer's requirements for preparation of surfaces and material installation instructions.

B. Perform installation in accordance with ASTM C1193.

C. Perform acoustical sealant application work in accordance with ASTM C919.

D. Measure joint dimensions and size joint backers to achieve the following, unless otherwise indicated:
   1. Width/depth ratio of 2:1.
   2. Neck dimension no greater than 1/3 of the joint width.
   3. Surface bond area on each side not less than 75 percent of joint width.

E. Install bond breaker backing tape where backer rod cannot be used.

F. Install sealant free of air pockets, foreign embedded matter, ridges, and sags, and without getting sealant on adjacent surfaces.

G. Do not install sealant when ambient temperature is outside manufacturer's recommended temperature range, or will be outside that range during the entire curing period, unless manufacturer's approval is obtained and instructions are followed.

H. Nonsag Sealants: Tool surface concave, unless otherwise indicated; remove masking tape immediately after tooling sealant surface.

3.04 FIELD QUALITY CONTROL

A. Perform field quality control inspection/testing as specified in PART 1 under QUALITY ASSURANCE article.

B. Non-Destructive Adhesion Testing: If there are any failures in first 100 linear feet, notify Architect immediately.

C. Destructive Adhesion Testing: If there are any failures in first 1000 linear feet, notify Architect immediately.

D. Remove and replace failed portions of sealants using same materials and procedures as indicated for original installation.

E. Repair destructive test location damage immediately after evaluation and recording of results.

3.05 POST-OCCUPANCY

A. Post-Occupancy Inspection: Perform visual inspection of entire length of project sealant joints at a time that joints have opened to their greatest width; i.e. at the low temperature in the thermal cycle. Report failures immediately and repair.

END OF SECTION

SECTION 07 9513
EXPANSION JOINT COVER ASSEMBLIES

PART 1 GENERAL

1.01 SECTION INCLUDES

A. Expansion joint assemblies for masonry wall, interior wall and floor surfaces.

1.02 RELATED REQUIREMENTS

A. Section 04 2000 - Unit Masonry: Placement of joint cover assembly frames in masonry.

B. Section 07 7100 - Roof Specialties: Roof expansion and control joint covers.

C. Section 09 2116 - Gypsum Board Assemblies: Placement of expansion joint assemblies in gypsum board walls and ceilings.

1.03 REFERENCE STANDARDS

A. ASTM B221 - Standard Specification for Aluminum and Aluminum-Alloy Extruded Bars, Rods, Wire, Profiles, and Tubes; 2014.

B. ASTM B221M - Standard Specification for Aluminum and Aluminum-Alloy Extruded Bars, Rods, Wire, Profiles, and Tubes (Metric); 2013.

C. ASTM B308/B308M - Standard Specification for Aluminum-Alloy 6061-T6 Standard Structural Profiles; 2010.

D. ITS (DIR) - Directory of Listed Products; current edition.

E. UL (DIR) - Online Certifications Directory; current listings at database.ul.com.

1.04 SUBMITTALS

A. See Section 01 3000 - Administrative Requirements, for submittal procedures.

B. Product Data: Provide joint assembly profiles, profile dimensions, available colors and finish.

C. Shop Drawings: Indicate joint and splice locations, miters, layout of the work, affected adjacent construction.

D. Samples: Submit two samples 6 inch long, illustrating profile, dimension, color, and finish selected.

E. Manufacturer's Installation Instructions: Indicate rough-in sizes and required tolerances for item placement.

F. Maintenance Materials: Furnish the following for Owner's use in maintenance of project.
   1. Extra Resilient Joint Filler: 20 ft length and any special tools required for installation.

PART 2 PRODUCTS

2.01 MANUFACTURERS

A. Expansion Joint Cover Assemblies:
   1. Construction Specialties, Inc; (Basis of Design): www.c-sgroup.com.
   2. MM Systems Corp: www.mmsystemscorp.com.
   3. Emseal: www.emseal.com.
   4. Substitutions: See Section 01 6000 - Product Requirements.

2.02 EXPANSION JOINT COVER ASSEMBLIES

A. Expansion Joint Cover Assemblies - General: Factory-fabricated and assembled; designed to completely fill joint openings, sealed to prevent passage of air, dust, water, smoke; suitable for traffic expected.

1. Joint Dimensions and Configurations: As indicated on drawings.
2. Joint Cover Sizes: Selected to suit joint width and configuration, based on manufacturer's published recommendations and limitations.
3. Lengths: Provide covers in full lengths required; avoid splicing wherever possible.
4. Anchors, Fasteners, and Fittings: Provided by cover manufacturer.

B. Floor Joint Covers: Coordinate with indicated floor coverings.
1. If floor covering is not indicated, obtain instructions from Architect before proceeding.
2. If style is not indicated, provide extruded aluminum frame both sides, resilient seals, and minimize exposed metal.

C. Resilient Seal Type Covers: Having flat exposed surface without crevices that could collect dirt; designed to withstand expected movement without extrusion of seal from joint assembly; for floors, provide style that is flush with top of floor covering; for exterior joints, weathertight.

D. Covers In Gypsum Board Assemblies: Provide style with anchoring wings that can be completely covered by joint compound.

E. Covers In Fire Rated Assemblies: Provide cover assembly having fire rating equivalent to that of assembly into which it is installed.
1. Acceptable Evaluation Agencies: UL (DIR) and ITS (DIR).

2.03 ARCHITECTURAL JOINT SYSTEMS FOR EXTERIOR WALLS

A. Exterior Expansion Joint Sealer: Factory-applied low-modulous silicone, acrylic-impregnated expanding foam sealant and closed-cell (EVA) foam combined in a unified, binary sealant system.
1. Size as required to provide weathertight seal when installed.

2.04 MATERIALS

A. Seal Material: Silicone.
1. Color: As selected by Architect from manufacturer's standard range.

B. All miters and changes in direction to be field fabricated.

C. Extruded Aluminum: ASTM B221 (ASTM B221M), 6063 alloy, T6 temper; or ASTM B308/B308M, 6061 alloy, T6 temper.
1. Exposed Finish Outdoors: Superior Performing Organic Coating: multiple coat, thermally cured polyvinylidene fluoride system; Kynar 500 or Hylar 5000..
2. Exposed Finish at Floors: Mill finish or natural anodized.
3. Exposed Finish at Walls and Ceilings: Natural anodized.

D. Resilient Seals:
1. For Ceilings: Any resilient material, flush, pleated, or hollow gasket.
2. For Pedestrian Traffic Applications: EPDM rubber, Neoprene, or Santoprene; no PVC; Shore A hardness of 40 to 50 Durometer.
3. Color: as selected from manufacturers standard range.

E. Anchors and Fasteners: As recommended by cover manufacturer.

F. Threaded Fasteners: Stainless steel.

G. Backing Paint for Aluminum Components in Contact with Cementitious Materials: Asphaltic type.

PART 3 EXECUTION

3.01 EXAMINATION

A. Verify that joint preparation and dimensions are acceptable and in accordance with manufacturer's requirements.

3.02 PREPARATION

A. Prepare substrates according to architectural joint system manufacturer's written instructions.

B. Repair concrete slabs and blockouts using manufacturer's recommended repair grout of compressive strength adequate for anticipated structural loadings.

C. Coordinate and furnish anchorages, setting drawings, and instructions for installing joint systems. Provide fasteners of metal, type, and size to suit type of construction indicated and to provide for secure attachment of joint systems.

3.03 INSTALLATION

A. Install components and accessories in accordance with manufacturer's instructions.

B. Align work plumb and level, flush with adjacent surfaces.

C. Cut and fit ends to accommodate thermal expansion and contraction of metal without buckling of frames.

D. Locate in continuous contact with adjacent surfaces

E. Rigidly anchor to substrate to prevent misalignment. Locate anchors at interval recommended by manufacturer, but not less than 3 inches from each end and not more than 24 inches o.c.

F. Seals in Metal Frames: Install elastomeric seals and membranes in frames to comply with manufacturer's written instructions. Install with minimum number of end joints.
   1. Provide in continuous lengths for straight sections.
   2. Seal transitions according to manufacturer's written instructions. Vulcanize or heat-weld field-spliced joints as recommended by manufacturer.
   3. Installation: Mechanically lock seals into frames or adhere to frames with adhesive or pressure-sensitive tape as recommended by manufacturer.

G. Compression Seals: Apply adhesive or lubricant adhesive as recommended by manufacturer before installing compression seals.

H. Fire-Resistance-Rated Assemblies: Coordinate installation of architectural joint assembly materials and associated work so complete assemblies comply with assembly performance requirements.
   1. Fire Barriers: Install fire barriers to provide continuous, uninterrupted fire resistance throughout length of joint, including transitions and field splices.

3.04 PROTECTION

A. Do not permit traffic over unprotected floor joint surfaces.

B. Provide strippable coating to protect finish surface.

3.05 SCHEDULE

A. Floor Expansion Joint Covers:
   1. Construction Specialties, Inc., Model GTR/GTRW
   2. Joint width: 2"
   3. Fire barrier: 2 hour rating

B. Wall Joints at Exterior Walls:

1. Emseal, Model WFR2, or Construction Specialties, Inc., Model VF with fire barrier.
2. Joint width: 2"
3. Fire barrier: 2 hour rating

C. Wall Joints at Interior Walls:
1. Construction Specialties, Inc., Model FWF
2. Use complementing joint covers FWFC, FWFM as applicable
3. Joint width: 2"
4. Fire barrier: 2 hour rating

D. Wall Joints at Interior Ceilings:
1. Construction Specialties, Inc., Model FCF
2. Use complementing joint covers FWFC, FCFC, FWF as applicable
3. Joint width: 2"
4. Fire barrier: 2 hour rating

E. Roof Joints at Shingle and Metal Roof Areas:
1. Construction Specialties, Inc., Model RJT, RJTW
2. Provide factory-fabricated transitions including end caps, corners, transitions and miters to ensure weather integrity.
3. Joint width: 2"
4. Fire barrier: 2 hour rating
5. Finish: Kynar 500, as selected from manufacturers standard range.

F. Roof Joints at EPDM Roof areas: See Section 07 7100 - Roof Specialties.

END OF SECTION

SECTION 08 0671
HARDWARE SETS

PART 1 - DOOR HARDWARE SETS

1.01 GENERAL

A. The door hardware sets represent the design intent and direction of the owner and architect. They are a guideline only and should not be considered a detailed hardware schedule. Discrepancies, conflicting hardware and missing items should be brought to the attention of the architect with corrections made prior to the bidding process. Omitted items not included in a hardware set should be scheduled with the appropriate additional hardware required for proper application and functionality.

B. The supplier is responsible for handing and sizing all products as listed in the door hardware sets. Quantities listed are for each pair of doors, or for each single door.

C. Products listed in the Door Hardware Sets must meet the requirements described in the specification sections noted.
   1. Section 08 7100 - Door Hardware.
   2. Section 28 7400 - Access Control Hardware.

D. Manufacturer's Abbreviations:
   1. MK - McKinney
   2. PE - Pemko
   3. RI - RITE Door
   4. RO - Rockwood
   5. RU - Corbin Russwin
   6. AD - Adams Rite
   7. RF - Rixson
   8. NO - Norton
   9. SU - Securitron
   10. AK - Alarm Controls

Set: 1.0

Doors: B100H, B135B, C102CA, C103E, C104, C104B, C104C, C115, C115A, C117, C117A, C117B, D100BA, D105FA, D105FB, D105FC, D105FD, D111B, E115A, E124A, FH01A, FH01B, FH01C, FH02C, FH02D, FH02E, MB100B, MB100C, MB100D, PB100AC, PB100AD

All Hardware	BY DOOR SUPPLIER	00

Set: 2.0

Doors: A100K, A199AA, A199AB, A199AC, A199AD, A199BA, A199CA, A299AB, A299AC, A299B, A299C, B100C, B100E, B100F, B199FA, B199FB, B199FC, B199FD, B199FE, B199GA, B199HA, B199JA, B199KA, B200EA, B200EB, B200FA, B200K, B299F, B299FA, B299FB, B299FC, B299G, B299J, C100EA, C100EB, C100LB, D100C, E199LA, E299LA

2	Continuous Hinge	D329 83-1/8"	630	RI
2	Recessed Exit	D3676	US32D	RI
1	Trim	D3080-02 Cyl	US32D	RI
1	Cylinder (type to suit)	1080 (or) 3080 CT6R	630	RU

2	Surface Closer	D-DCT-351PKT90	EN	RI
2	Kick Plate	D-KP 10" high SA	US32D	RI
2	Electromagnetic Holder	D-MDH-310 900-XXX	689	RI
1	Seal Kit	D-SS44-STK-DBZ	Dark Bronze	RI
1	Seal Kit	D-SS-STK-DBZ	Dark Bronze	RI

Set: 3.0

Doors: C102C, C103

1	Storeroom Lock	ML2057 LWA CT6R	630	RU
1	Interchangeable Core	8027	630	RU
2	Door Stop	403 (or) 441CU	US26D	RO

Notes: Balance of hardware by STC door supplier.

Set: 4.0

Doors: C110, C111, C138, C139

1	Storeroom Lock	ML2057 LWA CT6R	630	RU
1	Interchangeable Core	8027	630	RU
1	Door Stop	403 (or) 441CU	US26D	RO

Notes: Balance of hardware by STC door supplier.

Set: 5.0

Doors: C103A, C103B

1	Storeroom Lock	ML2057 LWA CT6R	630	RU
1	Interchangeable Core	8027	630	RU
1	Surface Closer	R7500 (or) PR7500	689	NO
1	Kick Plate	K1050 10" BEV	US32D	RO
1	Door Stop	403 (or) 441CU	US26D	RO

Notes: Balance of hardware by STC door supplier.

Set: 6.0

Doors: C107, C108, C126, C130E

1	Removable Mullion	907BKM - DOOR HEIGHT	RU

2	Exit Device (rim, classroom)	ED5200 L955	630	RU
2	Cylinder (type to suit)	1080 (or) 3080 CT6R	630	RU
2	Interchangeable Core	8027	630	RU
2	Surface Closer	J7500	689	NO
2	Kick Plate	K1050 10" BEV	US32D	RO
2	Door Stop	403 (or) 441CU	US26D	RO

Notes: Balance of hardware by STC door supplier.

Set: 7.0

1	Exit Device (rim, classroom)	ED5200 L955	630	RU
1	Cylinder (type to suit)	1080 (or) 3080 CT6R	630	RU
1	Interchangeable Core	8027	630	RU
1	Surface Closer	J7500	689	NO
1	Kick Plate	K1050 10" BEV	US32D	RO
1	Door Stop	403 (or) 441CU	US26D	RO

Notes: ***SET NOT USED***
Balance of hardware by STC door supplier.

Set: 8.0

Doors: A100DB, C100AB, C100AC, C100CA, C100CB, E100AB, E100AC, E100AD, E100JB, E100JC, E100JD, E100JE, E100JF, E100JG, E101CC, E101DD, E101EE, E101FF, E101GG

2	Continuous Hinge	CFM__SLF-HD1 PT - DOOR HEIGHT		PE
1	Removable Mullion	907BKM - DOOR HEIGHT		RU
2	Exit Device (rim, exit only)	ED5200 EO M92	630	RU
1	Cylinder (type to suit)	1080 (or) 3080 CT6R	630	RU
1	Interchangeable Core	8027	630	RU
2	Surf Overhead Stop	8-336	630	RF
2	Surface Closer	J7500	689	NO
1	Threshold	272A MSES25SS		PE
1	Rain Guard	346C		PE
1	Gasketing	5110BL		PE
2	Sweep	3452CNB		PE
2	Frame Harness	QC-C1500P		MK
2	Door Harness	QC-C___ - LENGTH TO SUIT		MK
2	Electric Power Transfer	EL-CEPT		SU
2	Door Position Switch	DPS2-M-GY		SU

Notes: Perimeter/meeting stile seals by frame/door supplier.

Set: 9.0

Doors: B100AB, B100AC

1	Continuous Hinge	CFM__SLF-HD1 PT - DOOR HEIGHT		PE
1	Exit Device (rim, exit only)	ED5200 EO M92	630	RU
1	Door Pull	BF158 Mtg-Type 12XHD	US32D	RO
1	Surf Overhead Stop	8-336	630	RF
1	Surface Closer	J7500	689	NO
1	Threshold	272A MSES25SS		PE
1	Rain Guard	346C		PE
1	Sweep	3452CNB		PE
1	Frame Harness	QC-C1500P		MK
1	Door Harness	QC-C___ - LENGTH TO SUIT		MK
1	Electric Power Transfer	EL-CEPT		SU
1	Door Position Switch	DPS2-M-GY		SU

Notes: Perimeter/meeting stile seals by frame/door supplier.

Set: 10.0

Doors: A100A, E100HF

2	Continuous Hinge	CFM__SLF-HD1 PT - DOOR HEIGHT		PE
1	Removable Mullion	907BKM - DOOR HEIGHT		RU
1	Exit Device (rim, exit only)	ED5200 EO M92	630	RU
1	Access Control Exit Device (SELP10)	ED5200N K157 MELR SELP10 IPS 24AD	630	RU
2	Cylinder (type to suit)	1080 (or) 3080 CT6R	630	RU
2	Door Pull	BF158 Mtg-Type 12XHD	US32D	RO
2	Surf Overhead Stop	8-336	630	RF
2	Surface Closer	J7500	689	NO
1	Threshold	272A MSES25SS		PE
1	Rain Guard	346C		PE
1	Gasketing	5110BL		PE
2	Sweep	3452CNB		PE
2	Frame Harness	QC-C1500P		MK
3	Door Harness	QC-C___ - LENGTH TO SUIT		MK
2	Electric Power Transfer	EL-CEPT		SU
2	Door Position Switch	DPS2-M-GY		SU
1	Lock Power	BY SECURITY		

Notes: Perimeter/meeting stile seals by frame/door supplier.
Electronic Operation: Valid card, remote release signal or key retracts latchbolt. Free egress at all times. In case of power loss, door remains locked and latched.

Set: 11.0

Doors: A100DA, B100AA, C100AA, C100CC, C100GB, E100AA, E100JA, E101HH

2	Continuous Hinge	CFM__SLF-HD1 PT - DOOR HEIGHT		PE
1	Removable Mullion	907BKM - DOOR HEIGHT		RU
1	Exit Device (rim, exit only)	ED5200 EO M92	630	RU
1	Access Control Exit Device (SELP10)	ED5200N K157 MELR SELP10 IPS 24AD	630	RU
2	Cylinder (type to suit)	1080 (or) 3080 CT6R	630	RU
2	Door Pull	BF158 Mtg-Type 12XHD	US32D	RO
2	Surf Overhead Stop	8-336	630	RF
2	Surface Closer	J7500	689	NO
1	Threshold	272A MSES25SS		PE
1	Rain Guard	346C		PE
1	Gasketing	5110BL		PE
2	Sweep	3452CNB		PE
2	Frame Harness	QC-C1500P		MK
3	Door Harness	QC-C___ - LENGTH TO SUIT		MK
2	Electric Power Transfer	EL-CEPT		SU
2	Door Position Switch	DPS2-M-GY		SU
1	Lock Power	BY SECURITY		

Notes: Perimeter/meeting stile seals by frame/door supplier.
Electronic Operation: Valid card or key retracts latchbolt. Free egress at all times. In case of power loss, door remains locked and latched.

Set: 12.0

Doors: A100H, B100M, E100DA, E100FA

2	Continuous Hinge	CFM__SLF-HD1 PT - DOOR HEIGHT		PE
1	Removable Mullion	907BKM - DOOR HEIGHT		RU
1	Exit Device (rim, exit only)	ED5200 EO M92	630	RU
1	Access Control Exit Device (SELP10)	ED5200N K157 MELR SELP10 IPS 24AD	630	RU
2	Cylinder (type to suit)	1080 (or) 3080 CT6R	630	RU
2	Interchangeable Core	8027	630	RU
2	Door Pull	BF158 Mtg-Type 12XHD	US32D	RO
2	Surface Closer	CPS7500	689	NO
1	Threshold	272A MSES25SS		PE
1	Rain Guard	346C		PE

1	Gasketing	5110BL		PE
2	Sweep	3452CNB		PE
2	Astragal	297AS		PE
2	Frame Harness	QC-C1500P		MK
3	Door Harness	QC-C___ - LENGTH TO SUIT		MK
2	Electric Power Transfer	EL-CEPT		SU
2	Door Position Switch	DPS2-M-GY		SU
1	Lock Power	BY SECURITY		

Notes: Perimeter seals by frame supplier.
Electronic Operation: Valid card or key retracts latchbolt. Free egress at all times. In case of power loss, door remains locked and latched.

Set: 13.0

Doors: B199GB, B199JB

2	Continuous Hinge	CFM__SLF-HD1 - DOOR HEIGHT		PE
1	Removable Mullion	907BKM - DOOR HEIGHT		RU
2	Exit Device (rim, exit only)	ED5200 EO	630	RU
1	Cylinder (type to suit)	1080 (or) 3080 CT6R	630	RU
1	Interchangeable Core	8027	630	RU
2	Door Pull	BF158 Mtg-Type 12XHD	US32D	RO
2	Surf Overhead Stop	8-336	630	RF
2	Surface Closer	J7500	689	NO
1	Threshold	272A MSES25SS		PE
1	Rain Guard	346C		PE
1	Gasketing	5110BL		PE
2	Sweep	3452CNB		PE
2	Door Position Switch	DPS2-M-GY		SU

Notes: Perimeter/meeting stile seals by frame/door supplier.

Set: 14.0

Doors: D122A, D122B

2	Continuous Hinge	CFM__SLF-HD1 - DOOR HEIGHT		PE
1	Removable Mullion	907BKM - DOOR HEIGHT		RU
2	Exit Device (rim, exit only)	ED5200 EO	630	RU
1	Cylinder (type to suit)	1080 (or) 3080 CT6R	630	RU
1	Interchangeable Core	8027	630	RU
2	Surf Overhead Stop	8-336	630	RF

2	Surface Closer	J7500	689	NO
1	Threshold	272A MSES25SS		PE
1	Rain Guard	346C		PE
1	Gasketing	5110BL		PE
2	Sweep	3452CNB		PE
2	Door Position Switch	DPS2-M-GY		SU

Notes: Perimeter/meeting stile seals by frame/door supplier.

Set: 15.0

Doors: C100FA, C107B

2	Continuous Hinge	CFM__SLF-HD1 - DOOR HEIGHT		PE
1	Removable Mullion	907BKM - DOOR HEIGHT		RU
1	Exit Device (rim, exit only)	ED5200 EO	630	RU
1	Exit Device (rim, nightlatch)	ED5200 K157 x LC	630	RU
2	Cylinder (type to suit)	1080 (or) 3080 CT6R	630	RU
2	Interchangeable Core	8027	630	RU
2	Door Pull	BF158 Mtg-Type 12XHD	US32D	RO
2	Surface Closer	CPS7500	689	NO
1	Threshold	272A MSES25SS		PE
1	Rain Guard	346C		PE
1	Gasketing	5110BL		PE
2	Sweep	3452CNB		PE
2	Astragal	297AS		PE
2	Door Position Switch	DPS2-M-GY		SU

Notes: Perimeter seals by frame supplier.

Set: 16.0

Doors: A100M, A125B, A125C, A199BB, A199CB, B199HB, B199KB, D118A, E101G, E101H, E101I, E101J, E101K, E101L, E101M

2	Continuous Hinge	CFM__SLF-HD1 - DOOR HEIGHT		PE
1	Removable Mullion	907BKM - DOOR HEIGHT		RU
2	Exit Device (rim, exit only)	ED5200 EO	630	RU
1	Cylinder (type to suit)	1080 (or) 3080 CT6R	630	RU
1	Interchangeable Core	8027	630	RU
2	Surface Closer	CPS7500	689	NO
1	Threshold	272A MSES25SS		PE
1	Rain Guard	346C		PE

1	Gasketing	5110BL		PE
2	Sweep	3452CNB		PE
2	Astragal	297AS		PE
2	Door Position Switch	DPS2-M-GY		SU

Notes: Perimeter seals by frame supplier.

Set: 17.0

Doors: 108A, 108B, C120B, C126B, D101, E101BA

1	Continuous Hinge	CFM__SLF-HD1 - DOOR HEIGHT		PE
1	Exit Device (rim, exit only)	ED5200 EO	630	RU
1	Surface Closer	CPS7500	689	NO
1	Threshold	272A MSES25SS		PE
1	Rain Guard	346C		PE
1	Sweep	3452CNB		PE
1	Door Position Switch	DPS2-M-GY		SU

Notes: Perimeter seals by frame supplier.

Set: 18.0

Doors: FH101D

1	Continuous Hinge	CFM__HD1 PT - DOOR HEIGHT		PE
1	Access Control Exit Device (SELP10)	ED5200N K157 MELR SELP10 IPS 24AD	630	RU
1	Cylinder (type to suit)	1080 (or) 3080 CT6R	630	RU
1	Interchangeable Core	8027	630	RU
1	Door Pull	BF158 Mtg-Type 12XHD	US32D	RO
1	Surface Closer	CPS7500	689	NO
1	Kick Plate	K1050 10" BEV	US32D	RO
1	Threshold	279x224AFGT MSES25SS		PE
1	Rain Guard	346C		PE
1	Gasketing	S773BL		PE
1	Sweep	3452CNB		PE
1	Frame Harness	QC-C1500P		MK
2	Door Harness	QC-C___ - LENGTH TO SUIT		MK
1	Electric Power Transfer	EL-CEPT		SU
1	Lock Power	BY SECURITY		

Notes: Electronic Operation: Valid card or key retracts latchbolt. Free egress at all times. In case of power loss, door remains locked and latched.

Set: 19.0

1	Continuous Hinge	CFM__HD1 - DOOR HEIGHT		PE
1	Exit Device (rim, nightlatch)	ED5200 K157 x LC	630	RU
1	Cylinder (type to suit)	1080 (or) 3080 CT6R	630	RU
1	Interchangeable Core	8027	630	RU
1	Door Pull	BF158 Mtg-Type 12XHD	US32D	RO
1	Surface Closer	CPS7500	689	NO
1	Kick Plate	K1050 10" BEV	US32D	RO
1	Threshold	279x224AFGT MSES25SS		PE
1	Rain Guard	346C		PE
1	Gasketing	S773BL		PE
1	Sweep	3452CNB		PE
1	Door Position Switch	DPS2-M-GY		SU

Set: 20.0

Doors: FH50A, FH51

2	Continuous Hinge	CFM__HD1 - DOOR HEIGHT		PE
1	Removable Mullion	907BKM - DOOR HEIGHT		RU
2	Exit Device (rim, exit only)	ED5200 EO	630	RU
1	Cylinder (type to suit)	1080 (or) 3080 CT6R	630	RU
1	Interchangeable Core	8027	630	RU
2	Door Pull	BF158 Mtg-Type 12XHD	US32D	RO
2	Surface Closer	CPS7500	689	NO
2	Kick Plate	K1050 10" BEV	US32D	RO
1	Threshold	272A MSES25SS		PE
1	Rain Guard	346C		PE
1	Gasketing	S773BL		PE
1	Gasketing	5110BL		PE
2	Sweep	3452CNB		PE
2	Astragal	297AS		PE
2	Door Position Switch	DPS2-M-GY		SU

Set: 21.0

2	Continuous Hinge	CFM__HD1 - DOOR HEIGHT		PE
1	Removable Mullion	907BKM - DOOR HEIGHT		RU
1	Exit Device (rim, exit only)	ED5200 EO	630	RU
1	Trim	D3080-02 Cyl	US32D	RI

2	Cylinder (type to suit)	1080 (or) 3080 CT6R	630	RU
2	Surface Closer	CPS7500	689	NO
2	Kick Plate	K1050 10" BEV	US32D	RO
1	Threshold	279x224AFGT MSES25SS		PE
1	Rain Guard	346C		PE
1	Gasketing	S773BL		PE
2	Sweep	3452CNB		PE

Notes: ***SET NOT USED***

Set: 22.0

Doors: FH40, FH46, GH100

1	Continuous Hinge	CFM__HD1 - DOOR HEIGHT		PE
1	Continuous Hinge	CFM__HD1 PT - DOOR HEIGHT		PE
1	Dust Proof Strike	570	US26D	RO
2	Flush Bolt (manual)	555 (or) 557	US26D	RO
1	Access Control Mort Lock	ML20606 x SELP10-SEC LSA CT6R	630	RU
1	Interchangeable Core	8027	630	RU
1	Coordinator	1700	Black	RO
2	Surface Closer	CPS7500	689	NO
2	Kick Plate	K1050 10" BEV	US32D	RO
1	Threshold	279x224AFGT MSES25SS		PE
1	Rain Guard	346C		PE
1	Gasketing	S773BL		PE
2	Sweep	3452CNB		PE
1	Astragal	S771C		PE
1	Astragal	357SP		PE
1	Frame Harness	QC-C1500P		MK
1	Door Harness	QC-C___ - LENGTH TO SUIT		MK
1	Electric Power Transfer	EL-CEPT		SU
2	Door Position Switch	DPS2-M-GY		SU
1	Lock Power	BY SECURITY		

Notes: Electronic Operation: Valid card unlocks outside lever or key retracts latchbolt. Free egress at all times. In case of power loss, door remains locked and latched.

Set: 22.1

Doors: FH43

1	Continuous Hinge	CFM__HD1 PT - DOOR HEIGHT		PE

1	Access Control Mort Lock	ML20606 x SELP10-SEC LSA CT6R	630	RU
1	Interchangeable Core	8027	630	RU
1	Coordinator	1700	Black	RO
1	Surface Closer	CPS7500	689	NO
1	Kick Plate	K1050 10" BEV	US32D	RO
1	Threshold	279x224AFGT MSES25SS		PE
1	Rain Guard	346C		PE
1	Gasketing	S773BL		PE
1	Sweep	3452CNB		PE
1	Frame Harness	QC-C1500P		MK
1	Door Harness	QC-C___ - LENGTH TO SUIT		MK
1	Electric Power Transfer	EL-CEPT		SU
1	Door Position Switch	DPS2-M-GY		SU
1	Lock Power	BY SECURITY		

Notes: Electronic Operation: Valid card unlocks outside lever or key retracts latchbolt. Free egress at all times. In case of power loss, door remains locked and latched.

Set: 23.0

Doors: A301, B128B, D100BB, GH101

1	Continuous Hinge	CFM__SLF-HD1 - DOOR HEIGHT		PE
1	Continuous Hinge	CFM__SLF-HD1 PT - DOOR HEIGHT		PE
1	Dust Proof Strike	570	US26D	RO
2	Flush Bolt (manual)	555 (or) 557	US26D	RO
1	Access Control Mort Lock	ML20606 x SELP10-SEC LSA CT6R	630	RU
1	Interchangeable Core	8027	630	RU
2	Surface Closer	CPS7500	689	NO
1	Threshold	279x224AFGT MSES25SS		PE
1	Rain Guard	346C		PE
2	Sweep	3452CNB		PE
1	Astragal	S771C		PE
1	Astragal	357SP		PE
1	Frame Harness	QC-C1500P		MK
1	Door Harness	QC-C___ - LENGTH TO SUIT		MK
1	Electric Power Transfer	EL-CEPT		SU
2	Door Position Switch	DPS2-M-GY		SU
1	Lock Power	BY SECURITY		

Notes: Perimeter/meeting stile seals by frame/door supplier.
Electronic Operation: Valid card unlocks outside lever or key retracts latchbolt. Free egress at all times. In

case of power loss, door remains locked and latched.

Set: 24.0

Doors: B125A, B127A, B129A, B135A, B136B, B137B, B138B, D120A, GH102

1	Continuous Hinge	CFM__SLF-HD1 PT - DOOR HEIGHT		PE
1	Access Control Mort Lock	ML20606 x SELP10-SEC LSA CT6R	630	RU
1	Interchangeable Core	8027	630	RU
1	Surface Closer	CPS7500	689	NO
1	Threshold	279x224AFGT MSES25SS		PE
1	Rain Guard	346C		PE
1	Sweep	3452CNB		PE
1	Frame Harness	QC-C1500P		MK
1	Door Harness	QC-C___ - LENGTH TO SUIT		MK
1	Electric Power Transfer	EL-CEPT		SU
1	Door Position Switch	DPS2-M-GY		SU
1	Lock Power	BY SECURITY		

Notes: Perimeter/meeting stile seals by frame/door supplier.
Electronic Operation: Valid card unlocks outside lever or key retracts latchbolt. Free egress at all times. In case of power loss, door remains locked and latched.

Set: 25.0

Doors: A135AB, D110A

1	Continuous Hinge	CFM__SLF-HD1 PT - DOOR HEIGHT		PE
1	Access Control Mort Lock	ML20606 x SELP10-SEC LSA CT6R	630	RU
1	Interchangeable Core	8027	630	RU
1	Surface Closer	CPS7500T	689	NO
1	Threshold	279x224AFGT MSES25SS		PE
1	Rain Guard	346C		PE
1	Sweep	3452CNB		PE
1	Frame Harness	QC-C1500P		MK
1	Door Harness	QC-C___ - LENGTH TO SUIT		MK
1	Electric Power Transfer	EL-CEPT		SU
1	Door Position Switch	DPS2-M-GY		SU
1	Lock Power	BY SECURITY		

Notes: Perimeter/meeting stile seals by frame/door supplier.
Electronic Operation: Valid card unlocks outside lever or key retracts latchbolt. Free egress at all times. In case of power loss, door remains locked and latched.

Set: 26.0

Doors: B301-1, FH49, PB100AA, PB100AB

2	Continuous Hinge	CFM__HD1 - DOOR HEIGHT		PE
1	Dust Proof Strike	570	US26D	RO
2	Flush Bolt (manual)	555 (or) 557	US26D	RO
1	Storeroom Lock	ML2057 LWA CT6R	630	RU
1	Interchangeable Core	8027	630	RU
2	Surface Closer	CPS7500	689	NO
2	Kick Plate	K1050 10" BEV	US32D	RO
1	Threshold	279x224AFGT MSES25SS		PE
1	Rain Guard	346C		PE
1	Gasketing	S773BL		PE
2	Sweep	3452CNB		PE
1	Astragal	S771C		PE
1	Astragal	357SP		PE
2	Door Position Switch	DPS2-M-GY		SU

Set: 27.0

Doors: C104D, FH47, GH104

2	Continuous Hinge	CFM__HD1 - DOOR HEIGHT		PE
1	Dust Proof Strike	570	US26D	RO
2	Flush Bolt (manual)	555 (or) 557	US26D	RO
1	Storeroom Lock	ML2057 LWA CT6R	630	RU
1	Interchangeable Core	8027	630	RU
2	Surface Closer	CPS7500T	689	NO
2	Kick Plate	K1050 10" BEV	US32D	RO
1	Threshold	279x224AFGT MSES25SS		PE
1	Rain Guard	346C		PE
1	Gasketing	S773BL		PE
2	Sweep	3452CNB		PE
1	Astragal	S771C		PE
1	Astragal	357SP		PE
2	Door Position Switch	DPS2-M-GY		SU

Notes: EXTERIOR STORAGE X KEY ACCESS (HM/SINGLE)

Set: 28.0

Doors: C204, D117, E201A, MB100A

1	Continuous Hinge	CFM__HD1 - DOOR HEIGHT		PE
1	Storeroom Lock	ML2057 LWA CT6R	630	RU
1	Interchangeable Core	8027	630	RU
1	Surface Closer	CPS7500	689	NO
1	Kick Plate	K1050 10" BEV	US32D	RO
1	Threshold	279x224AFGT MSES25SS		PE
1	Rain Guard	346C		PE
1	Gasketing	S773BL		PE
1	Sweep	3452CNB		PE
1	Door Position Switch	DPS2-M-GY		SU

Notes: EXTERIOR STORAGE X KEY ACCESS (HM/SINGLE)

Set: 29.0

Doors: B120A

2	Continuous Hinge	CFM__HD1 - DOOR HEIGHT		PE
1	Dust Proof Strike	570	US26D	RO
2	Flush Bolt (manual)	555 (or) 557	US26D	RO
1	Storeroom Lock	ML2057 LWA CT6R	630	RU
1	Interchangeable Core	8027	630	RU
2	Surface Closer	CPS7500	689	NO
1	Threshold	279x224AFGT MSES25SS		PE
1	Rain Guard	346C		PE
1	Gasketing	S773BL		PE
2	Sweep	3452CNB		PE
1	Astragal	S771C		PE
1	Astragal	357SP		PE
2	Door Position Switch	DPS2-M-GY		SU

Notes: Perimeter seals by frame supplier.

Set: 30.0

Doors: B100BB

2	Continuous Hinge	CFM__SLF-HD1 PT - DOOR HEIGHT		PE
1	Removable Mullion	907BKM - DOOR HEIGHT		RU
2	Exit Device (rim, exit only)	ED5200 EO M92	630	RU
1	Cylinder (type to suit)	1080 (or) 3080 CT6R	630	RU
1	Interchangeable Core	8027	630	RU
2	Door Pull	BF158 Mtg-Type 12XHD	US32D	RO

2	Surf Overhead Stop	8-336	630	RF
2	Surface Closer	J7500	689	NO
1	Gasketing	5110BL		PE
2	Frame Harness	QC-C1500P		MK
2	Door Harness	QC-C___ - LENGTH TO SUIT		MK
2	Electric Power Transfer	EL-CEPT		SU
2	Door Position Switch	DPS2-M-GY		SU

Notes: Perimeter/meeting stile seals by frame/door supplier.

Set: 31.0

Doors: A100B

2	Continuous Hinge	CFM__SLF-HD1 PT - DOOR HEIGHT		PE
1	Removable Mullion	907BKM - DOOR HEIGHT		RU
1	Exit Device (rim, exit only)	ED5200 EO M92	630	RU
1	Access Control Exit Device (SELP10)	ED5200N K157 MELR SELP10 IPS 24AD	630	RU
2	Cylinder (type to suit)	1080 (or) 3080 CT6R	630	RU
2	Door Pull	BF158 Mtg-Type 12XHD	US32D	RO
2	Surf Overhead Stop	8-336	630	RF
2	Surface Closer	J7500	689	NO
1	Gasketing	5110BL		PE
2	Frame Harness	QC-C1500P		MK
3	Door Harness	QC-C___ - LENGTH TO SUIT		MK
2	Electric Power Transfer	EL-CEPT		SU
2	Door Position Switch	DPS2-M-GY		SU
1	Lock Power	BY SECURITY		

Notes: Perimeter/meeting stile seals by frame/door supplier.
Electronic Operation: Valid card, remote release signal or key retracts latchbolt. Free egress at all times. In case of power loss, door remains locked and latched.

Set: 32.0

Doors: B100BA

2	Continuous Hinge	CFM__SLF-HD1 PT - DOOR HEIGHT		PE
1	Removable Mullion	907BKM - DOOR HEIGHT		RU
1	Exit Device (rim, exit only)	ED5200 EO M92	630	RU
1	Access Control Exit Device (SELP10)	ED5200N K157 MELR SELP10 IPS 24AD	630	RU
2	Cylinder (type to suit)	1080 (or) 3080 CT6R	630	RU
2	Surf Overhead Stop	8-336	630	RF

2	Surface Closer	J7500	689	NO
1	Gasketing	5110BL		PE
2	Frame Harness	QC-C1500P		MK
3	Door Harness	QC-C___ - LENGTH TO SUIT		MK
2	Electric Power Transfer	EL-CEPT		SU
2	Door Position Switch	DPS2-M-GY		SU
1	Lock Power	BY SECURITY		

Notes: Perimeter/meeting stile seals by frame/door supplier.
Electronic Operation: Valid card or key retracts latchbolt. Free egress at all times. In case of power loss, door remains locked and latched.

Set: 33.0

Doors: A101B, B102A

1	Continuous Hinge	CFM__SLF-HD1 PT - DOOR HEIGHT		PE
1	Access Control Mort Lock	ML20606 x SELP10-SEC LSA CT6R	630	RU
1	Deadbolt	DL2217 CT6	626	RU
2	Interchangeable Core	8027	630	RU
1	Surface Closer	2800ST	689	NO
1	Kick Plate	K1050 10" BEV	US32D	RO
1	Frame Harness	QC-C1500P		MK
1	Door Harness	QC-C___ - LENGTH TO SUIT		MK
1	Electric Power Transfer	EL-CEPT		SU
1	Door Position Switch	DPS2-M-GY		SU
1	Lock Power	BY SECURITY		

Notes: Perimeter/meeting stile seals by frame/door supplier.
Deadbolt to secure office after hours.
Electronic Operation: Valid card unlocks outside lever or key retracts latchbolt. Free egress at all times. In case of power loss, door remains locked and latched.

Set: 34.0

Doors: A101A, B102B

1	Continuous Hinge	CFM__SLF-HD1 PT - DOOR HEIGHT		PE
1	Access Control Mort Lock	ML20606 x SELP10-SEC LSA CT6R	630	RU
1	Deadbolt	DL2217 CT6	626	RU
2	Interchangeable Core	8027	630	RU
1	Surface Closer	2800ST	689	NO
1	Kick Plate	K1050 10" BEV	US32D	RO
1	Frame Harness	QC-C1500P		MK

1	Door Harness	QC-C___ - LENGTH TO SUIT		MK
1	Electric Power Transfer	EL-CEPT		SU
1	Door Position Switch	DPS2-M-GY		SU
1	Desktop Door Control	DTC-M2-D-6-A-G-V1		AK
1	Lock Power	BY SECURITY		

Notes: Perimeter/meeting stile seals by frame/door supplier.
Deadbolt to secure office after hours.
Electronic Operation: Valid card unlocks outside lever or key retracts latchbolt. Free egress at all times. In case of power loss, door remains locked and latched.

Set: 35.0

Doors: E100BE, E100BF

2	Continuous Hinge	CFM__SLF-HD1 - DOOR HEIGHT		PE
1	Removable Mullion	907BKM - DOOR HEIGHT		RU
1	Exit Device (rim, dummy trim)	ED5200 L950	630	RU
1	Exit Device (rim, storeroom)	ED5200 L957	630	RU
2	Cylinder (type to suit)	1080 (or) 3080 CT6R	630	RU
2	Interchangeable Core	8027	630	RU
2	Surf Overhead Stop	8-336	630	RF
2	Surface Closer	J7500	689	NO
1	Gasketing	5110BL		PE

Notes: Perimeter/meeting stile seals by frame/door supplier.

Set: 36.0

Doors: B109, B113, C132A, C210B, C210C

1	Continuous Hinge	CFM__SLF-HD1 - DOOR HEIGHT		PE
1	Mortise Deadlock	MS185_ Schoolhouse Function	628	AD
1	Cylinder (type to suit)	1080 (or) 3080 CT6R	630	RU
1	Interchangeable Core	8027	630	RU
1	Cylinder (thumbturn)	4066 - LENGTH/CAM TO SUIT	130	AD
1	Push Bar & Pull	BF15847 T1	US32D	RO
1	Surface Closer	2800ST	689	NO

Notes: Perimeter/meeting stile seals by frame/door supplier.

Set: 37.0

Doors: A100CA, C100BA, C100BB, C100BC, C100BD, C100BE, C100BF, C100GA, E100BA, E100BB, E100BC, E100BD, E100HA, E100HB, E100HC, E100HD, E100HE

2	Continuous Hinge	CFM__HD1 - DOOR HEIGHT		PE
2	Push Bar & Pull	BF15847 T1	US32D	RO
2	Surf Overhead Stop	8-336	630	RF
2	Surface Closer	J7500	689	NO

Notes: Perimeter/meeting stile seals by frame/door supplier.

Set: 38.0

Doors: A100CB

2	Continuous Hinge	CFM__SLF-HD1 - DOOR HEIGHT		PE
1	Removable Mullion	907BKM - DOOR HEIGHT		RU
2	Exit Device (rim, exit only)	ED5200 EO	630	RU
1	Cylinder (type to suit)	1080 (or) 3080 CT6R	630	RU
1	Interchangeable Core	8027	630	RU
2	Surf Overhead Stop	8-336	630	RF
2	Surface Closer	J7500	689	NO
1	Gasketing	5110BL		PE

Notes: Perimeter/meeting stile seals by frame/door supplier.

Set: 39.0

Doors: C210

2	Continuous Hinge	CFM__SLF-HD1 - DOOR HEIGHT		PE
1	Removable Mullion	907BKM - DOOR HEIGHT		RU
1	Exit Device (rim, dummy trim)	ED5200 L950	630	RU
1	Exit Device (rim, storeroom)	ED5200 L957	630	RU
2	Cylinder (type to suit)	1080 (or) 3080 CT6R	630	RU
2	Interchangeable Core	8027	630	RU
2	Surface Closer	CPS7500	689	NO
2	Kick Plate	K1050 10" BEV	US32D	RO
1	Gasketing	5110BL		PE
2	Astragal	297AS		PE

Notes: Perimeter seals by frame supplier.

Set: 40.0

Doors: A102, B101

1	Continuous Hinge	CFM__SLF-HD1 - DOOR HEIGHT		PE
1	Storeroom Lock	ML2057 LWA CT6R	630	RU
1	Interchangeable Core	8027	630	RU
1	Door Stop	403 (or) 441CU	US26D	RO

Notes: Perimeter/meeting stile seals by frame/door supplier.

Set: 41.0

Doors: B104

1	Continuous Hinge	CFM__SLF-HD1 - DOOR HEIGHT		PE
1	Classroom Lock	ML2055 LWA CT6R	630	RU
1	Interchangeable Core	8027	630	RU
1	Surface Closer	2800ST	689	NO
1	Kick Plate	K1050 10" BEV	US32D	RO

Notes: Perimeter seals by frame supplier.

Set: 42.0

Doors: D118, D122C, E120A, E120B

6	Hinge (heavy weight)	T4A3786	US26D	MK
1	Removable Mullion	907BKM - DOOR HEIGHT		RU
1	Exit Device (rim, dummy trim)	ED5200 L950	630	RU
1	Exit Device (rim, storeroom)	ED5200 L957	630	RU
2	Cylinder (type to suit)	1080 (or) 3080 CT6R	630	RU
2	Interchangeable Core	8027	630	RU
2	Surface Closer	R7500 (or) PR7500	689	NO
2	Kick Plate	K1050 10" BEV	US32D	RO
2	Door Stop	403 (or) 441CU	US26D	RO
1	Gasketing	S773BL		PE
1	Gasketing	5110BL		PE

Set: 43.0

Doors: A125A, A125D, C100D, C100K, C101AA, C101DA, C101E, C101F, C120A, C200A, C200G, D121A, D121B, E101A, E101B, E101C, E101D, E101E, E101F, E101G, E101K, E101N, E201

6	Hinge (heavy weight)	T4A3786	US26D	MK
1	Removable Mullion	907BKM - DOOR HEIGHT		RU
1	Exit Device (rim, dummy trim)	ED5200 L950	630	RU
1	Exit Device (rim, storeroom)	ED5200 L957	630	RU

2	Cylinder (type to suit)	1080 (or) 3080 CT6R	630	RU
2	Interchangeable Core	8027	630	RU
2	Surface Closer	CPS7500	689	NO
2	Kick Plate	K1050 10" BEV	US32D	RO
1	Gasketing	S773BL		PE
1	Gasketing	5110BL		PE
2	Astragal	297AS		PE

Set: 44.0

Doors: C104BA, E199LB

8	Hinge (heavy weight)	T4A3786	US26D	MK
1	Removable Mullion	907BKM - DOOR HEIGHT		RU
1	Exit Device (rim, exit only)	ED5200A EO	630	RU
1	Exit Device (rim, nightlatch)	ED5200A L957	630	RU
2	Cylinder (type to suit)	1080 (or) 3080 CT6R	630	RU
2	Interchangeable Core	8027	630	RU
2	Surface Closer	CLP7500	689	NO
2	Kick Plate	K1050 10" BEV	US32D	RO
1	Gasketing	S88BL		PE
1	Gasketing	5110BL		PE
2	Astragal	297AS		PE

Set: 45.0

Doors: C103AA, C103CA, C199DB

4	Hinge (heavy weight)	T4A3786	US26D	MK
1	Exit Device (rim, storeroom)	ED5200 L957	630	RU
1	Cylinder (type to suit)	1080 (or) 3080 CT6R	630	RU
1	Interchangeable Core	8027	630	RU
1	Surface Closer	CPS7500	689	NO
1	Kick Plate	K1050 10" BEV	US32D	RO
1	Gasketing	S773BL		PE

Set: 46.0

Doors: C099D, C099E, C199CA, C199DA, C299DB, C299EB

3	Hinge (heavy weight)	T4A3786	US26D	MK
1	Exit Device (rim, classroom)	ED5200A L955	630	RU
1	Cylinder (type to suit)	1080 (or) 3080 CT6R	630	RU
1	Interchangeable Core	8027	630	RU

1	Surface Closer	R7500 (or) PR7500	689	NO
1	Kick Plate	K1050 10" BEV	US32D	RO
1	Door Stop	403 (or) 441CU	US26D	RO
1	Gasketing	S773BL		PE

Set: 47.0

Doors: C113

3	Hinge (heavy weight)	T4A3786	US26D	MK
1	Exit Device (rim, classroom)	ED5200A L955	630	RU
1	Cylinder (type to suit)	1080 (or) 3080 CT6R	630	RU
1	Interchangeable Core	8027	630	RU
1	Surface Closer	CPS7500	689	NO
1	Kick Plate	K1050 10" BEV	US32D	RO
1	Gasketing	S773BL		PE

Set: 48.0

Doors: D100B

6	Hinge (heavy weight)	T4A3786	US26D	MK
1	Removable Mullion	907BKM - DOOR HEIGHT		RU
1	Exit Device (rim, passage)	ED5200 L910	630	RU
1	Cylinder (type to suit)	1080 (or) 3080 CT6R	630	RU
1	Interchangeable Core	8027	630	RU
2	Surface Closer	R7500 (or) PR7500	689	NO
2	Kick Plate	K1050 10" BEV	US32D	RO
2	Door Stop	403 (or) 441CU	US26D	RO
1	Gasketing	5110BL		PE
2	Silencer	608 (or) 609		RO

Set: 49.0

Doors: C199C

6	Hinge (heavy weight)	T4A3786	US26D	MK
1	Removable Mullion	907BKM - DOOR HEIGHT		RU
2	Exit Device (rim, passage)	ED5200A L910	630	RU
1	Cylinder (type to suit)	1080 (or) 3080 CT6R	630	RU
1	Interchangeable Core	8027	630	RU
2	Surface Closer	R7500 (or) PR7500	689	NO
2	Kick Plate	K1050 10" BEV	US32D	RO
2	Door Stop	403 (or) 441CU	US26D	RO

1	Gasketing	S88BL		PE
1	Gasketing	5110BL		PE
2	Astragal	297AS		PE

Set: 50.0

Doors: B299M, C003, C102D, C102G, C299DA

3	Hinge (heavy weight)	T4A3786	US26D	MK
1	Exit Device (rim, passage)	ED5200A L910	630	RU
1	Surface Closer	R7500 (or) PR7500	689	NO
1	Kick Plate	K1050 10" BEV	US32D	RO
1	Door Stop	403 (or) 441CU	US26D	RO
1	Gasketing	S88BL		PE

Set: 51.0

Doors: C100F, C100J, C100LA

2	Continuous Hinge	CFM__HD1 - DOOR HEIGHT		PE
1	Removable Mullion	907BKM - DOOR HEIGHT		RU
1	Exit Device (rim, dummy trim)	ED5200 L950	630	RU
1	Exit Device (rim, storeroom)	ED5200 L957	630	RU
3	Cylinder (type to suit)	1080 (or) 3080 CT6R	630	RU
3	Interchangeable Core	8027	630	RU
2	Surface Closer	CPS7500	689	NO
2	Kick Plate	K1050 10" BEV	US32D	RO
1	Gasketing	S773BL		PE
1	Gasketing	5110BL		PE
2	Astragal	297AS		PE

Set: 52.0

Doors: FH35, FH36, FH42, FH45

5	Hinge (heavy weight)	T4A3786	US26D	MK
1	Electric Hinge (heavy weight)	T4A3786-QC12	US26D	MK
1	Dust Proof Strike	570	US26D	RO
1	Flush Bolt	2842 (or) 2942	US26D	RO
1	Access Control Mort Lock	ML20606 x SELP10-SEC LSA CT6R	630	RU
1	Interchangeable Core	8027	630	RU
1	Coordinator	1700	Black	RO
2	Surface Closer	R7500 (or) PR7500	689	NO
2	Kick Plate	K1050 10" BEV	US32D	RO

2	Door Stop	403 (or) 441CU	US26D	RO
2	Silencer	608 (or) 609		RO
1	Frame Harness	QC-C1500P		MK
1	Door Harness	QC-C___ - LENGTH TO SUIT		MK
2	Door Position Switch	DPS2-M-GY		SU
1	Lock Power	BY SECURITY		

Notes: Card reader by security integrator.
Electronic Operation: Valid card unlocks outside lever or key retracts latchbolt. Free egress at all times. In case of power loss, door remains locked and latched.

Set: 53.0

Doors: E101DA

5	Hinge (heavy weight)	T4A3786	US26D	MK
1	Electric Hinge (heavy weight)	T4A3786-QC12	US26D	MK
1	Dust Proof Strike	570	US26D	RO
1	Flush Bolt	2842 (or) 2942	US26D	RO
1	Access Control Mort Lock	ML20606 x SELP10-SEC LSA CT6R	630	RU
1	Interchangeable Core	8027	630	RU
1	Coordinator	1700	Black	RO
2	Surface Closer	CPS7500	689	NO
2	Kick Plate	K1050 10" BEV	US32D	RO
2	Silencer	608 (or) 609		RO
1	Frame Harness	QC-C1500P		MK
1	Door Harness	QC-C___ - LENGTH TO SUIT		MK
2	Door Position Switch	DPS2-M-GY		SU
1	Lock Power	BY SECURITY		

Notes: Card reader by security integrator.
Electronic Operation: Valid card unlocks outside lever or key retracts latchbolt. Free egress at all times. In case of power loss, door remains locked and latched.

Set: 54.0

Doors: B102N, B103A, B154, B204A, B254A, C101BA, C103AB, C103F, C208, D116, E101DA, E102, E103A, E108A

2	Hinge (heavy weight)	T4A3786	US26D	MK
1	Electric Hinge (heavy weight)	T4A3786-QC12	US26D	MK
1	Access Control Mort Lock	ML20606 x SELP10-SEC LSA CT6R	630	RU
1	Interchangeable Core	8027	630	RU
1	Surface Closer	R7500 (or) PR7500	689	NO

1	Kick Plate	K1050 10" BEV	US32D	RO
1	Door Stop	403 (or) 441CU	US26D	RO
3	Silencer	608 (or) 609		RO
1	Frame Harness	QC-C1500P		MK
1	Door Harness	QC-C___ - LENGTH TO SUIT		MK
1	Door Position Switch	DPS2-M-GY		SU
1	Lock Power	BY SECURITY		

Notes: Card reader by security integrator.
Electronic Operation: Valid card unlocks outside lever or key retracts latchbolt. Free egress at all times. In case of power loss, door remains locked and latched.

Set: 55.0

Doors: A118, A218, A230, C134

2	Hinge (heavy weight)	T4A3786	US26D	MK
1	Electric Hinge (heavy weight)	T4A3786-QC12	US26D	MK
1	Access Control Mort Lock	ML20606 x SELP10-SEC LSA CT6R	630	RU
1	Interchangeable Core	8027	630	RU
1	Surface Closer	CPS7500	689	NO
1	Kick Plate	K1050 10" BEV	US32D	RO
3	Silencer	608 (or) 609		RO
1	Frame Harness	QC-C1500P		MK
1	Door Harness	QC-C___ - LENGTH TO SUIT		MK
1	Door Position Switch	DPS2-M-GY		SU
1	Lock Power	BY SECURITY		

Notes: Card reader by security integrator.
Electronic Operation: Valid card unlocks outside lever or key retracts latchbolt. Free egress at all times. In case of power loss, door remains locked and latched.

Set: 55.1

Doors: A131

3	Hinge (heavy weight)	T4A3786	US26D	MK
3	Electric Hinge (heavy weight)	T4A3786-QC12	US26D	MK
1	Access Control Mort Lock	ML20606 x SELP10-SEC LSA CT6R	630	RU
1	Interchangeable Core	8027	630	RU
1	Surface Closer	CPS7500	689	NO
1	Kick Plate	K1050 10" BEV	US32D	RO
1	Gasketing	S88BL		PE
1	Frame Harness	QC-C1500P		MK

1	Door Harness	QC-C___ - LENGTH TO SUIT		MK
1	Door Position Switch	DPS2-M-GY		SU
1	Lock Power	BY SECURITY		

Notes: Card reader by security integrator.
Electronic Operation: Valid card unlocks outside lever or key retracts latchbolt. Free egress at all times. In case of power loss, door remains locked and latched.

Set: 56.0

Doors: C105, C106, C109, D111A, D115, E101AA, E101EA, E101FA, E101JA, E201AA

6	Hinge	TA2714	US26D	MK
1	Dust Proof Strike	570	US26D	RO
2	Flush Bolt (manual)	555 (or) 557	US26D	RO
1	Storeroom Lock	ML2057 LWA CT6R	630	RU
1	Interchangeable Core	8027	630	RU
2	Door Stop	403 (or) 441CU	US26D	RO
2	Silencer	608 (or) 609		RO

Set: 56.1

Doors: E101AA

7	Hinge	TA2714	US26D	MK
1	Dust Proof Strike	570	US26D	RO
2	Flush Bolt (manual)	555 (or) 557	US26D	RO
1	Surface Bolt (dutch door)	630-4	US26D	RO
1	Storeroom Lock	ML2057 LWA CT6R	630	RU
1	Interchangeable Core	8027	630	RU
3	Door Stop	403 (or) 441CU	US26D	RO
2	Silencer	608 (or) 609		RO

Notes: Dutch door on active leaf only.

Set: 57.0

Doors: A111, A125AA, A137A, A137B, A236A, A236B, B105AA, B105AB, B149A, B149B, B209AA, B209AB, B248AA, B248AB, C122, C126A, C207, E101CA, E101FA, E101GB, E104A, E109A, E122A, E122B, GH103

6	Hinge	TA2714	US26D	MK
1	Dust Proof Strike	570	US26D	RO
2	Flush Bolt (manual)	555 (or) 557	US26D	RO
1	Storeroom Lock	ML2057 LWA CT6R	630	RU

1	Interchangeable Core	8027	630	RU
2	Surf Overhead Stop	10-X36	652	RF
2	Silencer	608 (or) 609		RO

Set: 58.0

Doors: C104AA

6	Hinge	TA2714	US26D	MK
1	Dust Proof Strike	570	US26D	RO
1	Flush Bolt	2842 (or) 2942	US26D	RO
1	Storeroom Lock	ML2057 LWA CT6R	630	RU
1	Interchangeable Core	8027	630	RU
1	Coordinator	1700	Black	RO
2	Surface Closer	CLP7500	689	NO
2	Kick Plate	K1050 10" BEV	US32D	RO
1	Gasketing	S88BL		PE
1	Astragal	S771C		PE
1	Astragal	357SP		PE

Set: 59.0

Doors: A101CA, A101CB, A101D, A101E, A101G, A101H, A101K, A101M, A101N, A101R, A102D, A103A, A103B, A104, A105, A106A, A106B, A108, A109, A110, A112, A113, A114A, A114B, A115, A119, A125E, A125F, A129A, A130, A134, A135A, A136, A138, A139, A140, A141, A142, A201AA, A201AB, A201C, A202A, A202B, A204, A205B, A205C, A206, A207, A208A, A208B, A210, A211, A212, A213, A214, A215A, A215B, A216, A217, A229, A233, A234A, A234B, A235, A237, A237A, A238, A239, A240, A242A, A242B, A243, A244, B101C, B101I, B101L, B101LA, B101N, B101P, B101S, B102D, B102DA, B102E, B102F, B102FA, B102H, B102J, B102L, B102M, B104B, B104C, B104F, B104G, B104H, B104J, B104K, B104L, B104M, B104O, B107, B108, B108A, B108B, B108D, B111, B111A, B112A, B112B, B115, B116, B120, B122, B123, B124, B125, B127, B128, B129, B135, B136, B136A, B137, B137CA, B138, B139, B140, B141, B142, B143, B144, B145, B146, B147, B148, B150, B151, B152, B153, B203, B205, B206, B207, B208, B208A, B209, B210, B210A, B211, B212, B213, B214, B215, B216, B217, B218, B219, B220, B221, B222, B223, B224A, B225A, B226A, B227A, B227B, B228A, B228B, B229A, B229B, B230A, B230B, B236A, B236B, B238, B239, B240, B241, B242, B243, B244, B245, B246, B247, B248, B249, B250, B251, B252, B253, B254, B255, C102S, C125, C128, C130, C131, C210AA, C210AB, C210D, C298D, D108, D113A, D119, D119A, D120, E101BB, E119, E121, E123, E124, FH02A, FH02B, FH100, FH38, FH38A, FH45B, FH48, FH52, MB101

3	Hinge	TA2714	US26D	MK
1	Storeroom Lock	ML2057 LWA CT6R	630	RU
1	Interchangeable Core	8027	630	RU
1	Door Stop	403 (or) 441CU	US26D	RO
3	Silencer	608 (or) 609		RO

Set: 60.0

Doors: B104P, B137A, B138A, C120C, C124A, C124B, C132B, D105B, D105CA, D113B, E101CB, E101GA, FH06, FH07

3	Hinge	TA2714	US26D	MK
1	Storeroom Lock	ML2057 LWA CT6R	630	RU
1	Interchangeable Core	8027	630	RU
1	Surf Overhead Stop	10-X36	652	RF
3	Silencer	608 (or) 609		RO

Set: 61.0

Doors: A101P, A101Q, A101S, A107, A116, A120, A123, A132, A208AA, A220, A222, A225, A228, A232, A242AA, B104Q, B114, B121, B134, B160, B204, B224AA, B231, B237, C002, C006, C101CA, C129, C132, C133, C136, C137, C198A, C198B, C201B, C201C, C201D, C201H, C201KA, C201KB, C201LA, C201LB, C205, C301AA, C301AB, C301BA, C302AA, C302BA, C399DA, C399EA, D102A, E101EA, E101EB, E101IA, E115, E116

3	Hinge	TA2714	US26D	MK
1	Storeroom Lock	ML2057 LWA CT6R	630	RU
1	Interchangeable Core	8027	630	RU
1	Surface Closer	R7500 (or) PR7500	689	NO
1	Kick Plate	K1050 10" BEV	US32D	RO
1	Door Stop	403 (or) 441CU	US26D	RO
3	Silencer	608 (or) 609	GRY	RO

Set: 61.1

Doors: B301-2

3	Hinge	TA2714	US26D	MK
1	Storeroom Lock	ML2057 LWA CT6R	630	RU
1	Interchangeable Core	8027	630	RU
1	Surface Closer	R7500 (or) PR7500	689	NO
1	Kick Plate	K1050 10" BEV	US32D	RO
1	Door Stop	403 (or) 441CU	US26D	RO
1	Threshold	166A MSES10SS		PE
1	Gasketing	S88BL		PE
1	Sweep	315CN		PE

Set: 62.0

Doors: D110B

3	Hinge	TA2714	US26D	MK

1	Storeroom Lock	ML2057 LWA CT6R	630	RU
1	Interchangeable Core	8027	630	RU
1	Door Closer	R7500H (or) PR7500H	689	NO
1	Kick Plate	K1050 10" BEV	US32D	RO
1	Door Stop	403 (or) 441CU	US26D	RO
3	Silencer	608 (or) 609		RO
1	Door Position Switch	DPS2-M-GY		SU

Notes: INTERIOR STORAGE/MECH X KEY ACCESS (WD-HM/SINGLE)

Set: 63.0

Doors: A212A, B233, C112, C123, C135

3	Hinge	TA2714	US26D	MK
1	Storeroom Lock	ML2057 LWA CT6R	630	RU
1	Interchangeable Core	8027	630	RU
1	Surface Closer	CLP7500	689	NO
1	Kick Plate	K1050 10" BEV	US32D	RO
3	Silencer	608 (or) 609		RO

Notes: INTERIOR STORAGE/MECH X KEY ACCESS (WD-HM/SINGLE)

Set: 64.0

Doors: A128, A299N, C005, C102B, C104A, C299EA

3	Hinge	TA2714	US26D	MK
1	Storeroom Lock	ML2057 LWA CT6R	630	RU
1	Interchangeable Core	8027	630	RU
1	Surface Closer	R7500 (or) PR7500	689	NO
1	Kick Plate	K1050 10" BEV	US32D	RO
1	Door Stop	403 (or) 441CU	US26D	RO
1	Gasketing	S88BL		PE

Notes: INTERIOR STORAGE/MECH X KEY ACCESS (WD-HM/SINGLE)

Set: 64.1

Doors: A124, B119, B131

3	Hinge	TA2714	US26D	MK
1	Storeroom Lock	ML2057 LWA CT6R	630	RU
1	Interchangeable Core	8027	630	RU

1	Surface Closer	CLP7500	689	NO
1	Kick Plate	K1050 10" BEV	US32D	RO
1	Gasketing	S88BL		PE

Notes: INTERIOR STORAGE/MECH X KEY ACCESS (WD-HM/SINGLE)

Set: 65.0

Doors: A101L, A101PA, A102B, A102F, B101A, B101B, B101D, B101G, B101J, B101R, B101T, B102C, B102CA, B102I, B104A, B104E, B104I, B108C

3	Hinge	TA2714	US26D	MK
1	Passage Latch	ML2010 LWA	630	RU
1	Door Stop	403 (or) 441CU	US26D	RO
3	Silencer	608 (or) 609		RO

Set: 65.1

Doors: A102A

6	Hinge	TA2714	US26D	MK
1	Dust Proof Strike	570	US26D	RO
2	Flush Bolt (manual)	555 (or) 557	US26D	RO
1	Passage Latch	ML2010 LWA	630	RU
2	Surf Overhead Stop	10-X36	652	RF
2	Silencer	608 (or) 609		RO

Set: 65.2

Doors: B103

3	Hinge	TA2714	US26D	MK
1	Passage Latch	ML2010 LWA	630	RU
1	Surf Overhead Stop	10-X36	652	RF
3	Silencer	608 (or) 609		RO

Set: 66.0

Doors: A101C, B102NA, B104N

3	Hinge	TA2714	US26D	MK
1	Passage Latch	ML2010 LWA	630	RU
1	Surface Closer	R7500 (or) PR7500	689	NO
1	Kick Plate	K1050 10" BEV	US32D	RO
1	Door Stop	403 (or) 441CU	US26D	RO

3	Silencer	608 (or) 609		RO

Set: 66.1

Doors: B102NB

3	Hinge	TA2714	US26D	MK
1	Passage Latch	ML2010 LWA	630	RU
1	Surface Closer	R7500 (or) PR7500	689	NO
1	Kick Plate	K1050 10" BEV	US32D	RO
1	Door Stop	403 (or) 441CU	US26D	RO
1	Gasketing	S88BL		PE

Set: 67.0

Doors: B122A, B123A, B128A, B147A, B150A, B225B, B248A, B250A

3	Hinge	TA2714	US26D	MK
1	Store Door Lock	ML2022 LWA CT6R	630	RU
2	Interchangeable Core	8027	630	RU
1	Door Stop	403 (or) 441CU	US26D	RO
1	Gasketing	S773BL		PE

Set: 68.0

Doors: A136A

6	Hinge	TA2714	US26D	MK
1	Dust Proof Strike	570	US26D	RO
1	Flush Bolt (manual)	555 (or) 557	US26D	RO
1	Classroom Lock	ML2055 LWA CT6R	630	RU
1	Interchangeable Core	8027	630	RU
2	Surf Overhead Stop	10-X36	652	RF
2	Silencer	608 (or) 609		RO

Set: 69.0

Doors: A125BA

6	Hinge	TA2714	US26D	MK
1	Dust Proof Strike	570	US26D	RO
2	Flush Bolt (manual)	555 (or) 557	US26D	RO
1	Classroom Lock	ML2055 LWA CT6R	630	RU
1	Interchangeable Core	8027	630	RU
2	Surface Closer	R7500 (or) PR7500	689	NO

2	Kick Plate	K1050 10" BEV	US32D	RO
2	Door Stop	403 (or) 441CU	US26D	RO
2	Silencer	608 (or) 609		RO

Set: 70.0

Doors: D105A

6	Hinge	TA2714	US26D	MK
1	Dust Proof Strike	570	US26D	RO
2	Flush Bolt (manual)	555 (or) 557	US26D	RO
1	Classroom Lock	ML2055 LWA CT6R	630	RU
1	Interchangeable Core	8027	630	RU
1	Door Closer	R7500H (or) PR7500H	689	NO
2	Kick Plate	K1050 10" BEV	US32D	RO
2	Door Stop	403 (or) 441CU	US26D	RO
2	Silencer	608 (or) 609		RO

Set: 71.0

Doors: A102C, A102E, A135AA, B101H, B101Q, B106, B107A, B110C, B112AA, B112AB, B117, B118, B121A, B126, B134A, C107A

3	Hinge	TA2714	US26D	MK
1	Classroom Lock	ML2055 LWA CT6R	630	RU
1	Cylinder (type to suit)	1080 (or) 3080 CT6R	630	RU
1	Door Stop	403 (or) 441CU	US26D	RO
3	Silencer	608 (or) 609	GRY	RO

Notes: INTERIOR CLRM STORAGE X KEY ACCESS (WD-HM/SINGLE)

Set: 72.0

Doors: A201B, A201D, B101K, B110D, D109

3	Hinge	TA2714	US26D	MK
1	Classroom Lock	ML2055 LWA CT6R	630	RU
1	Interchangeable Core	8027	630	RU
1	Surf Overhead Stop	10-X36	652	RF
3	Silencer	608 (or) 609		RO

Set: 73.0

Doors: A129B, B110A, B110B, B110E, C210A, D112, E101BA, E107A, E107B, E112A, E112B

3	Hinge	TA2714	US26D	MK
1	Classroom Lock	ML2055 LWA CT6R	630	RU
1	Interchangeable Core	8027	630	RU
1	Surface Closer	R7500 (or) PR7500	689	NO
1	Kick Plate	K1050 10" BEV	US32D	RO
1	Door Stop	403 (or) 441CU	US26D	RO
3	Silencer	608 (or) 609		RO

Notes: INTERIOR STORAGE/MECH X KEY ACCESS (WD-HM/SINGLE)

Set: 74.0

Doors: B109A, B109B, B201A, B201C, B202A, B202AA, B202AB, B202B, B224B, B256A, B256B, C118, C119

3	Hinge	TA2714	US26D	MK
1	Classroom Lock	ML2055 LWA CT6R	630	RU
1	Interchangeable Core	8027	630	RU
1	Surface Closer	R7500 (or) PR7500	689	NO
1	Kick Plate	K1050 10" BEV	US32D	RO
1	Door Stop	403 (or) 441CU	US26D	RO
1	Gasketing	S88BL		PE

Notes: INTERIOR STORAGE/MECH X KEY ACCESS (WD-HM/SINGLE)

Set: 74.1

Doors: B204B, D105DA

3	Hinge	TA2714	US26D	MK
1	Classroom Lock	ML2055 LWA CT6R	630	RU
1	Interchangeable Core	8027	630	RU
1	Surface Closer	CLP7500	689	NO
1	Kick Plate	K1050 10" BEV	US32D	RO
1	Gasketing	S88BL		PE

Notes: INTERIOR STORAGE/MECH X KEY ACCESS (WD-HM/SINGLE)

Set: 75.0

Doors: B101E, B101F

3	Hinge	TA2714	US26D	MK
1	Privacy Set	ML2060 LWA M19V	630	RU

2	Kick Plate	K1050 10" BEV	US32D	RO
1	Door Stop	403 (or) 441CU	US26D	RO
3	Silencer	608 (or) 609	GRY	RO

Notes: INTERIOR CLRM TOILET X PRIVACY (WD-HM/SINGLE)

Set: 75.1

Doors: A102G

3	Hinge	TA2714	US26D	MK
1	Privacy Set	ML2060 LWA M19V	630	RU
1	Surf Overhead Stop	10-X36	652	RF
1	Kick Plate	K1050 10" BEV	US32D	RO
3	Silencer	608 (or) 609		RO

Notes: INTERIOR CLRM TOILET X PRIVACY (WD-HM/SINGLE)

Set: 76.0

Doors: A101F, A101J, A125CA, A125H, A219, A231, B101M, B102G, B102K, B104D, B114A, B132, B136AA, B221A, B234, B237A, C209, D104A, D107A, E101GA, E101LA, E117A, E118A, GH105, MB102

3	Hinge	TA2714	US26D	MK
1	Privacy Set	ML2060 LWA M19V	630	RU
1	Surface Closer	R7500 (or) PR7500	689	NO
2	Kick Plate	K1050 10" BEV	US32D	RO
1	Door Stop	403 (or) 441CU	US26D	RO
3	Silencer	608 (or) 609	GRY	RO

Notes: INTERIOR CORR TOILET X PRIVACY (WD-HM/SINGLE)

Set: 77.0

Doors: A117, A133, C121, D114

3	Hinge	TA2714	US26D	MK
1	Privacy Set	ML2060 LWA M19V	630	RU
1	Surface Closer	CLP7500	689	NO
1	Kick Plate	K1050 10" BEV	US32D	RO
3	Silencer	608 (or) 609		RO

Notes: INTERIOR CORR TOILET X PRIVACY (WD-HM/SINGLE)

Set: 78.0

Doors: B137AA, B137BA, B138AB, B138BB

2	Hinge	TA2714	US26D	MK
1	Passage Latch	ML2010 LWA	630	RU
1	Kick Plate	K1050 10" BEV	US32D	RO
2	Door Stop	403 (or) 441CU	US26D	RO
2	Silencer	608 (or) 609		RO

Notes: Dutch door with bottom leaf only.

Set: 79.0

Doors: C198A

4	Hinge (heavy weight)	T4A3786	US26D	MK
1	Storeroom Lock	ML2057 LWA CT6R	630	RU
1	Interchangeable Core	8027	630	RU
1	Surface Closer	R7500 (or) PR7500	689	NO
1	Kick Plate	K1050 10" BEV	US32D	RO
1	Door Stop	403 (or) 441CU	US26D	RO
1	Gasketing	S88BL		PE

Notes: INTERIOR STORAGE/MECH X KEY ACCESS (WD-HM/SINGLE)

Set: 80.0

Doors: A125DA, A125GA, C114, C116, D104, D107, E101HA, E101KA, E105, E105A, E105B, E106A, E110, E110A, E110B, E111A, E113, E114, E117, E118

3	Hinge (heavy weight)	T4A3786	US26D	MK
1	Deadbolt	DL2217 CT6	626	RU
1	Interchangeable Core	8027	630	RU
1	Door Pull	BF Y110 Mtg-Type 1	US32D	RO
1	Push Plate	70G (4 x 20)	US32D	RO
1	Surface Closer	R7500 (or) PR7500	689	NO
2	Kick Plate	K1050 10" BEV	US32D	RO
1	Door Stop	403 (or) 441CU	US26D	RO
3	Silencer	608 (or) 609		RO

Set: 80.1

Doors: D102

4	Hinge (heavy weight)	T4A3786	US26D	MK
1	Deadbolt	DL2217 CT6	626	RU
1	Interchangeable Core	8027	630	RU
1	Door Pull	BF Y110 Mtg-Type 1	US32D	RO
1	Push Plate	70G (4 x 20)	US32D	RO
1	Surface Closer	CLP7500	689	NO
1	Kick Plate	K1050 10" BEV	US32D	RO
3	Silencer	608 (or) 609		RO

Set: 81.0

Doors: A100G, E100CA, E100EA

6	Hinge (heavy weight)	T4A3786	US26D	MK
2	Door Pull	BF Y110 Mtg-Type 1	US32D	RO
2	Push Plate	70G (4 x 20)	US32D	RO
2	Surface Closer	CPS7500	689	NO
2	Kick Plate	K1050 10" BEV	US32D	RO
2	Silencer	608 (or) 609		RO

Set: 82.0

Doors: C101A, C101B, C201A, C201E

8	Hinge (heavy weight)	T4A3786	US26D	MK
2	Door Pull	BF Y110 Mtg-Type 1	US32D	RO
2	Push Plate	70G (4 x 20)	US32D	RO
2	Surface Closer	CPS7500	689	NO
2	Kick Plate	K1050 10" BEV	US32D	RO
1	Gasketing	S773BL		PE
2	Astragal	297AS		PE

Set: 83.0

Doors: C101D, C101EA, C102FA, C103C, C103D, C201F

3	Hinge (heavy weight)	T4A3786	US26D	MK
1	Door Pull	BF Y110 Mtg-Type 1	US32D	RO
1	Push Plate	70G (4 x 20)	US32D	RO
1	Surface Closer	R7500 (or) PR7500	689	NO
1	Kick Plate	K1050 10" BEV	US32D	RO
1	Door Stop	403 (or) 441CU	US26D	RO
1	Gasketing	S773BL		PE

Set: 84.0

Doors: C102A, C201G

3	Hinge (heavy weight)	T4A3786	US26D	MK
1	Door Pull	BF Y110 Mtg-Type 1	US32D	RO
1	Push Plate	70G (4 x 20)	US32D	RO
1	Surface Closer	CPS7500	689	NO
1	Kick Plate	K1050 10" BEV	US32D	RO
1	Gasketing	S773BL		PE

Set: 85.0

Doors: FH42A, FH50

2	Continuous Hinge	CFM__HD1 - DOOR HEIGHT		PE
2	Door Pull	BF Y110 Mtg-Type 1	US32D	RO
2	Push Plate	70G (4 x 20)	US32D	RO
2	Surface Closer	R7500 (or) PR7500	689	NO
2	Kick Plate	K1050 10" BEV	US32D	RO
2	Door Stop	403 (or) 441CU	US26D	RO
1	Gasketing	S773BL		PE
2	Astragal	297AS		PE

Set: 86.0

Doors: B200H

2	Continuous Hinge	CFM__HD1 - DOOR HEIGHT		PE
2	Door Pull	BF Y110 Mtg-Type 1	US32D	RO
2	Push Plate	70G (4 x 20)	US32D	RO
2	Door Closer	R7500H (or) PR7500H	689	NO
2	Kick Plate	K1050 10" BEV	US32D	RO
2	Door Stop	403 (or) 441CU	US26D	RO
2	Silencer	608 (or) 609		RO

END OF SECTION

SECTION 08 1113
HOLLOW METAL DOORS AND FRAMES

PART 1 GENERAL

1.01 SECTION INCLUDES

A. Non-fire-rated hollow metal doors and frames.

B. Hollow metal frames for wood doors.

C. Fire-rated hollow metal doors and frames.

D. Thermally insulated hollow metal doors with frames.

E. Hollow metal borrowed lites glazing frames.

1.02 RELATED REQUIREMENTS

A. Section 08 7100 - Door Hardware.

B. Section 08 8000 - Glazing: Glass for doors and borrowed lites.

C. Section 08 3473 - Acoustical Doors and Frames: Metal acoustic doors and frames

1.03 ABBREVIATIONS AND ACRONYMS

A. ANSI - American National Standards Institute.

B. HMMA - Hollow Metal Manufacturers Association.

C. NAAMM - National Association of Architectural Metal Manufacturers.

D. NFPA - National Fire Protection Association.

E. SDI - Steel Door Institute.

F. UL - Underwriters Laboratories.

1.04 REFERENCE STANDARDS

A. ADA Standards - Americans with Disabilities Act (ADA) Standards for Accessible Design; 2010.

B. ANSI/SDI A250.4 - Test Procedure and Acceptance Criteria for Physical Endurance for Steel Doors, Frames and Frame Anchors; 2011.

C. ANSI/SDI A250.8 - Specifications for Standard Steel Doors and Frames (SDI-100); 2014.

D. ASTM A653/A653M - Standard Specification for Steel Sheet, Zinc-Coated (Galvanized) or Zinc-Iron Alloy-Coated (Galvannealed) by the Hot-Dip Process; 2015.

E. ASTM A1008/A1008M - Standard Specification for Steel, Sheet, Cold-Rolled, Carbon, Structural, High-Strength Low-Alloy, High-Strength Low-Alloy with Improved Formability, Solution Hardened, and Bake Hardenable; 2016.

F. ASTM A1011/A1011M - Standard Specification for Steel, Sheet and Strip, Hot-Rolled, Carbon, Structural, High-Strength Low-Alloy, High-Strength Low-Alloy with Improved Formability, and Ultra-High Strength; 2015.

G. BHMA A156.115 - American National Standard for Hardware Preparation in Steel Doors and Steel Frames; 2014.

H. ICC A117.1 - Accessible and Usable Buildings and Facilities; 2009.

I. ITS (DIR) - Directory of Listed Products; current edition.

J. NAAMM HMMA 830 - Hardware Selection for Hollow Metal Doors and Frames; 2002.

K. NAAMM HMMA 831 - Hardware Locations for Hollow Metal Doors and Frames; 2011.

L. NAAMM HMMA 840 - Guide Specifications for Installation and Storage of Hollow Metal Doors and Frames; 2007.

M. NAAMM HMMA 861 - Guide Specifications for Commercial Hollow Metal Doors and Frames; 2006.

N. NFPA 80 - Standard for Fire Doors and Other Opening Protectives; 2016.

O. NFPA 252 - Standard Methods of Fire Tests of Door Assemblies; 2012.

P. SDI 117 - Manufacturing Tolerances for Standard Steel Doors and Frames; 2013.

Q. UL (DIR) - Online Certifications Directory; current listings at database.ul.com.

R. UL 10C - Standard for Positive Pressure Fire Tests of Door Assemblies; Current Edition, Including All Revisions.

1.05 SUBMITTALS

A. Product Data: Materials and details of design and construction, hardware locations, reinforcement type and locations, anchorage and fastening methods, and finishes.

B. Shop Drawings: Details of each opening, showing elevations, glazing, frame profiles, and any indicated finish requirements.

C. Installation Instructions: Manufacturer's published instructions, including any special installation instructions relating to this project.

D. Manufacturer's Certificate: Certification that products meet or exceed specified requirements.

1.06 QUALITY ASSURANCE

A. Manufacturer Qualifications: Company specializing in manufacturing products specified in this section, with not less than three years documented experience.
   1. Provide hollow metal frames from SDI Certified manufacturer.

B. Maintain at project site copies of reference standards relating to installation of products specified.

1.07 DELIVERY, STORAGE, AND HANDLING

A. Comply with NAAMM HMMA 840 or ANSI/SDI A250.8 (SDI-100) in accordance with specified requirements.

B. Protect with resilient packaging; avoid humidity build-up under coverings; prevent corrosion and adverse effects on factory applied painted finish.

PART 2 PRODUCTS

2.01 MANUFACTURERS

A. Hollow Metal Doors and Frames:
   1. Ceco Door, an Assa Abloy Group company: www.assaabloydss.com.
   2. De La Fontaine Inc: www.delafontaine.com.
   3. Republic Doors: www.republicdoor.com.
   4. Steelcraft, an Allegion brand: www.allegion.com/sle.
   5. Technical Glass Products: www.tgpamerica.com.

2.02 DESIGN CRITERIA

A. Requirements for Hollow Metal Doors and Frames:
   1. Steel used for fabrication of doors and frames shall comply with one or more of the following requirements; Galvannealed steel conforming to ASTM A653/A653M, cold-rolled steel conforming to ASTM A1008/A1008M, or hot-rolled pickled and oiled

(HRPO) steel conforming to ASTM A1011/A1011M, Commercial Steel (CS) Type B for each.

2. Accessibility: Comply with ICC A117.1 and ADA Standards.

B. Materials

1. Doors and frames to be constructed from formed sheet steel or structural shapes and bars.
   a. Cold-Rolled Steel Sheet: ASTM A 1008/A 1008M, Commercial Steel (CS), Type B; suitable for exposed applications.
   b. Metallic-Coated Steel Sheet: ASTM A 653/A 653M, Commercial Steel (CS), Type B; with minimum G60 (Z180) or A60 (ZF180) metallic coating.
   c. Frame Anchors: ASTM A 653/A 653M, Commercial Steel (CS), Commercial Steel (CS), Type B; with minimum G60 (Z180) or A60 (ZF180) metallic coating.
2. Top and Bottom Edges: Reinforce tops and bottoms of doors with a continuous steel channel not less than 16 gauge, extending the full width of the door and welded to the face sheet. Doors with an inverted top channel to include a steel closure channel, screw attached, with the web of the channel flush with the face sheets of the door.
3. Door Edge Profile: Hinged edge square, and lock edge beveled.
4. Typical Door Face Sheets: Flush. Refer to Door Schedule for additional information.
5. Glazed Lights: Non-removable stops on non-secure side; sizes and configurations as indicated on drawings. Style: Manufacturers standard.
6. Hardware Preparations, Selections and Locations: Comply with NAAMM HMMA 830 and NAAMM HMMA 831 or BHMA A156.115 and ANSI/SDI A250.8 (SDI-100) in accordance with specified requirements.
   a. Hinge Reinforcement: Minimum 7 gauge (3/16") plate 1-1/4" x 9" or minimum 14 gauge continuous channel with pierced holes, drilled and tapped.
   b. Hardware Reinforcements: Fabricate according to ANSI/SDI A250.6 with reinforcing plates from same material as door face sheets
7. Zinc Coating for Typical Exterior Locations: Provide metal components zinc-coated (galvanized) and/or zinc-iron alloy-coated (galvannealed) by the hot-dip process in accordance with ASTM A653/A653M, with manufacturer's standard coating thickness, unless noted otherwise for specific hollow metal doors and frames.

C. Combined Requirements: If a particular door and frame unit is indicated to comply with more than one type of requirement, comply with the specified requirements for each type; for instance, an exterior door that is also indicated as being sound-rated must comply with the requirements specified for exterior doors and for sound-rated doors; where two requirements conflict, comply with the most stringent.

2.03 FABRICATION

A. Fabricate hollow metal work to be rigid and free of defects, warp, or buckle. Accurately form metal to required sizes and profiles, with minimum radius for thickness of metal. Where practical, fit and assemble units in manufacturer's plant. When shipping limitations so dictate, frames for large openings are to be fabricated in sections for splicing or splining in the field by others.

B. Tolerances: Fabricate hollow metal work to tolerances indicated in ANSI/SDI A250.8.

2.04 HOLLOW METAL DOORS

A. Glazed Lites: Factory cut openings in doors with applied trim or kits to fit. Factory install glazing where indicated.

B. Astragals: Provide overlapping astragals as noted in door hardware sets in Division 08 Section "Door Hardware" on one leaf of pairs of doors where required by NFPA 80 for

fire-performance rating or where indicated. Extend minimum 3/4 inch beyond edge of door on which astragal is mounted.

C. Continuous Hinge Reinforcement: Provide welded continuous 12 gauge strap for continuous hinges specified in hardware sets in Division 08 Section "Door Hardware".

D. Electrical Raceways: Provide hollow metal doors to receive electrified hardware with concealed wiring harness and standardized Molex™ plug connectors on both ends to accommodate up to twelve wires. Coordinate connectors on end of the wiring harness to plug directly into the electrified hardware and the through-wire transfer hardware or wiring harness specified in hardware sets in Division 08 Sections "Door Hardware" and "Access Control Hardware". Wire nut connections are not acceptable.

E. Door Finish: Factory primed and field finished.

F. Exterior Doors: Thermally insulated.
   1. Based on SDI Standards: ANSI/SDI A250.8 (SDI-100).
      a. Level 3 - Extra Heavy-duty.
      b. Physical Performance Level A, 1,000,000 cycles; in accordance with ANSI/SDI A250.4.
      c. Model 2 - Seamless.
      d. Door Face Metal Thickness: 16 gage, 0.053 inch, minimum.
      e. Zinc Coating: A60/ZF180 galvannealed coating; ASTM A653/A653M.
   2. Core Material: Polyurethane, 1.8 lbs/cu ft minimum density.
   3. Door Thickness: 1-3/4 inch, nominal.
   4. Top and Bottom Closures: Flush with top of faces and edges.
   5. Provide weep-hole openings in bottom of exterior doors to permit moisture to escape.

G. Interior Doors, Non-Fire Rated:
   1. Based on SDI Standards: ANSI/SDI A250.8 (SDI-100).
      a. Level 3 - Extra Heavy-duty.
      b. Physical Performance Level A, 1,000,000 cycles; in accordance with ANSI/SDI A250.4.
      c. Model 2 - Seamless.
      d. Door Face Metal Thickness: 16 gage, 0.053 inch, minimum.
      e. Zinc Coating: A60/ZF180 galvannealed coating; ASTM A653/A653M, at wet locations.
   2. Door Thickness: 1-3/4 inch, nominal.
   3. Top and Bottom Closures: Flush with top of faces and edges.

H. Fire-Rated Doors:
   1. Based on SDI Standards: ANSI/SDI A250.8 (SDI-100).
      a. Level 3 - Extra Heavy-duty.
      b. Physical Performance Level A, 1,000,000 cycles; in accordance with ANSI/SDI A250.4.
      c. Model 2 - Seamless.
      d. Door Face Metal Thickness: 16 gage, 0.053 inch, minimum.
   2. Fire Rating: As indicated on Door Schedule, tested in accordance with UL 10C and NFPA 252 ("positive pressure fire tests").
   3. Temperature-Rise Rating (TRR) Across Door Thickness: In accordance with local building code and authorities having jurisdiction.
   4. Provide units listed and labeled by UL (DIR) or ITS (DIR).
      a. Attach fire rating label to each fire rated unit.

5. Door Thickness: 1-3/4 inch, nominal.
6. Top and Bottom Closures: Flush with top of faces and edges.

2.05 HOLLOW METAL FRAMES

A. Shipping Limitations: Where frames are fabricated in sections due to shipping or handling limitations, provide alignment plates or angles at each joint, fabricated of same thickness metal as frames.

B. Welded Frames: Weld flush face joints continuously; grind, fill, dress, and make smooth, flush, and invisible.
   1. Welded frames are to be provided with two steel spreaders temporarily attached to the bottom of both jambs to serve as a brace during shipping and handling. Spreader bars are for bracing only and are not to be used to size the frame opening.

C. Comply with standards and/or custom guidelines as indicated for corresponding door in accordance with applicable door frame requirements.

D. Frame Finish: Factory primed and field finished.

E. Exterior Door Frames: Full profile/continuously welded type.
   1. Galvanizing: Components hot-dipped zinc-iron alloy-coated (galvannealed) in accordance with ASTM A653/A653M, with A60/ZF180 coating.
   2. Frame Metal Thickness: 14 gage, 0.067 inch, minimum.
   3. Weatherstripping: Separate, see Section 08 7100.

F. Interior Door Frames, Non-Fire Rated: Full profile/continuously welded type.
   1. Frame Metal Thickness: 16 gage, 0.053 inch, minimum.

G. Door Frames, Fire-Rated: Full profile/continuously welded type.
   1. Fire Rating: Same as door, labeled.
   2. Frame Metal Thickness: 16 gage, 0.053 inch, minimum.

H. Frames for Wood Doors: Comply with frame requirements in accordance with corresponding door.
   1. Frame Metal Thickness: 16 gage, 0.053 inch, minimum.

I. Mullions for Pairs of Doors: Removable type, with profile similar to jambs.

J. Borrowed Lites Glazing Frames: Construction and face dimensions to match door frames, and as indicated on drawings.
   1. Provide closed tubular members with no visible face seams or joints, fabricated from same material as door frame.
   2. Fasten members at crossings and to jambs by butt welding.

K. Mortar Guards: Provide guard boxes at back of hardware mortises in frames at all hinges and strike preps regardless of grouting requirements.

L. Frames in Masonry Walls: Size to suit masonry coursing with head member 2 inch high to fill opening without cutting masonry units.

M. Frames Wider than 48 inches: Reinforce with steel channel fitted tightly into frame head, flush with top.
   1. Provide high frequency hinge reinforcements at door openings 48-inches and wider with mortise butt type hinges at top hinge locations.

N. Frames Installed Back-to-Back: Reinforce with steel channels anchored to floor and overhead structure.

O. Continuous Hinge Reinforcement: Provide welded continuous 12 gauge straps for continuous hinges specified in hardware sets in Division 08 Section "Door Hardware".

P. Provide countersunk, flat- or oval-head exposed screws and bolts for exposed fasteners unless otherwise indicated for removable stops, provide security screws at exterior locations.

Q. Electrical Thru-Wiring: Provide hollow metal frames receiving electrified hardware with loose wiring harness (not attached to open throat components or installed in closed mullion tubes) and standardized Molex™ plug connectors on one end to accommodate up to twelve wires. Coordinate connectors on end of the wiring harness to plug directly into the electric through-wire transfer hardware or wiring harness specified in hardware sets in Division 08 Sections "Door Hardware" and "Access Control Hardware".

R. Electrical Knock Out Boxes: Factory weld 18 gauge electrical knock out boxes to frame for electrical hardware preps; including but not limited to, electric through wire transfer hardware, electrical raceways and wiring harnesses, door position switches, electric strikes, magnetic locks, and jamb mounted card readers as specified in hardware sets in Division 08 Sections "Door Hardware" and "Access Control Hardware".
   1. Provide electrical knock out boxes with a dual 1/2-inch and 3/4-inch knockouts.
   2. Conduit to be coordinated and installed in the field (Division 26) from middle hinge box and strike box to door position box.
   3. Electrical knock out boxes to comply with NFPA requirements and fit electrical door hardware as specified in hardware sets in Division 08 Section "Door Hardware".
   4. Electrical knock out boxes for continuous hinges should be located in the center of the vertical dimension on the hinge jamb.

S. Floor Anchors: Weld anchors to bottom of jambs and mullions with at least four spot welds per anchor.

T. Jamb Anchors: Provide number and spacing of anchors as follows:
   1. Masonry Type: Locate anchors not more than 18 inches from top and bottom of frame. Space anchors not more than 32 inches o.c. and as follows:
      a. Two anchors per jamb up to 60 inches high.
      b. Three anchors per jamb from 60 to 90 inches high.
      c. Four anchors per jamb from 90 to 120 inches high.
      d. Four anchors per jamb plus 1 additional anchor per jamb for each 24 inches or fraction thereof above 120 inches high.
   2. Stud Wall Type: Locate anchors not more than 18 inches from top and bottom of frame. Space anchors not more than 32 inches o.c. and as follows:
      a. Three anchors per jamb up to 60 inches high.
      b. Four anchors per jamb from 60 to 90 inches high.
      c. Five anchors per jamb from 90 to 96 inches high.
      d. Five anchors per jamb plus 1 additional anchor per jamb for each 24 inches or fraction thereof above 96 inches high.
      e. Two anchors per head for frames above 42 inches wide and mounted in metal stud partitions.

U. Door Silencers: Except on weatherstripped or gasketed doors, drill stops to receive door silencers. Silencers to be supplied by frame manufacturer regardless if specified in Division 08 Section "Door Hardware".

V. Bituminous Coating: Where frames are fully grouted with an approved Portland Cement based grout or mortar, coat inside of frame throat with a water based bituminous or asphaltic

emulsion coating to a minimum thickness of 3 mils DFT, tested in accordance with UL 10C and applied to the frame under a 3rd party independent follow-up service procedure.

2.06 FINISHES

A. Prime Finishes: Doors and frames to be cleaned, and chemically treated to insure maximum finish paint adhesion. Surfaces of the door and frame exposed to view to receive a factory applied coat of rust inhibiting shop primer.
   1. Shop Primer: Manufacturer's standard, fast-curing, lead and chromate free primer complying with ANSI/SDI A250.10 acceptance criteria; recommended by primer manufacturer for substrate; and compatible with substrate and field-applied coatings.

2.07 ACCESSORIES

A. Glazing: As specified in Section 08 8000.

B. Removable Stops: Formed sheet steel, shape as indicated on drawings, butted corners; prepared for countersink style tamper proof screws.

C. Grout for Frames: Portland cement grout with maximum 4 inch slump for hand troweling; thinner pumpable grout is prohibited.

D. Silencers: Resilient rubber, fitted into drilled hole; 3 on strike side of single door, 3 on center mullion of pairs, and 2 on head of pairs without center mullions.

E. Temporary Frame Spreaders: Provide for factory- or shop-assembled frames.

PART 3 EXECUTION

3.01 EXAMINATION

A. Verify existing conditions before starting work.

B. Verify that opening sizes and tolerances are acceptable.

C. Verify that finished walls are in plane to ensure proper door alignment.

3.02 PREPARATION

A. Coat inside of frames to be installed in masonry or to be grouted, with bituminous coating, prior to installation.

B. Remove welded-in shipping spreaders installed at factory. Restore exposed finish by grinding, filling, and dressing, as required to make repaired area smooth, flush, and invisible on exposed faces.

C. Prior to installation, adjust and securely brace welded hollow metal frames for square, level, twist, and plumb condition.

D. Tolerances shall comply with SDI-117 "Manufacturing Tolerances Standard Steel Doors and Frames."

E. Drill and tap doors and frames to receive non-template, mortised, and surface-mounted door hardware.

3.03 INSTALLATION

A. Install doors and frames in accordance with manufacturer's instructions and related requirements of specified door and frame standards or custom guidelines indicated.

B. Install fire rated units in accordance with NFPA 80.

C. Coordinate frame anchor placement with wall construction.

D. Grout frames in masonry construction, using hand trowel methods; brace frames so that pressure of grout before setting will not deform frames.

E. Install door hardware as specified in Section 08 7100.

F. Comply with glazing installation requirements of Section 08 8000.

G. Hollow Metal Frames: Install hollow metal frames of size and profile indicated. Comply with ANSI/SDI A250.11 and NFPA 80 at fire rated openings.
   1. Set frames accurately in position, plumbed, leveled, aligned, and braced securely until permanent anchors are set. After wall construction is complete and frames properly set and secured, remove temporary braces, leaving surfaces smooth and undamaged. Shim as necessary to comply with installation tolerances.
   2. Floor Anchors: Provide floor anchors for each jamb and mullion that extends to floor, and secure with post-installed expansion anchors.
   3. Masonry Walls: Coordinate installation of frames to allow for solidly filling space between frames and masonry with mortar.
   4. Grout Requirements: Do not grout head of frames unless reinforcing has been installed in head of frame. Do not grout vertical or horizontal closed mullion members.

H. Hollow Metal Doors: Fit hollow metal doors accurately in frames, within clearances specified below. Shim as necessary.

I. Prime-Coat and Painted Finish Touchup: Immediately after erection, sand smooth rusted or damaged areas of prime coat, or painted finishes, and apply touchup of compatible air drying, rust-inhibitive primer, zinc rich primer (exterior and galvanized openings) or finish paint.

3.04 TOLERANCES

A. Clearances Between Door and Frame: Comply with related requirements of specified frame standards or custom guidelines indicated in accordance with SDI 117 or NAAMM HMMA 861
   1. Non-Fire-Rated Standard Steel Doors:
      a. Jambs and Head: 1/8 inch plus or minus 1/16 inch.
      b. Between Edges of Pairs of Doors: 1/8 inch plus or minus 1/16 inch.
      c. Between Bottom of Door and Top of Threshold: Maximum 3/8 inch.
      d. Between Bottom of Door and Top of Finish Floor (No Threshold): Maximum 3/4 inch.
   2. Fire-Rated Doors: Install doors with clearances according to NFPA 80.

B. Maximum Diagonal Distortion: 1/16 in measured with straight edge, corner to corner.

3.05 ADJUSTING AND CLEANING

A. Remove grout and other bonding material from hollow metal work immediately after installation.

B. Adjust for smooth and balanced door movement.

C. Test sound control doors for force to close, latch, and unlatch; adjust as necessary in compliance with requirements.

D. Final Adjustments: Check and readjust operating hardware items immediately before final inspection. Leave work in complete and proper operating condition. Remove and replace defective work, including hollow metal work that is warped, bowed, or otherwise unacceptable

3.06 SCHEDULE

A. Refer to Door and Frame Schedule on the drawings.

END OF SECTION

SECTION 08 1416
FLUSH WOOD DOORS

PART 1 GENERAL

1.01 SECTION INCLUDES

A. Flush wood doors; flush configuration; fire rated, non-rated, and acoustical as scheduled.

1.02 RELATED REQUIREMENTS

A. Section 06 2000 - Finish Carpentry: Installing wood doors.

B. Section 08 1113 - Hollow Metal Doors and Frames.

C. Section 08 7100 - Door Hardware.

D. Section 08 8000 - Glazing.

1.03 REFERENCE STANDARDS

A. ANSI A135.4 - American National Standard for Basic Hardboard; 2012.

B. ASTM E90 - Standard Test Method for Laboratory Measurement of Airborne Sound Transmission Loss of Building Partitions and Elements; 2009 (Reapproved 2016).

C. ASTM E413 - Classification for Rating Sound Insulation; 2016.

D. AWI/AWMAC/WI (AWS) - Architectural Woodwork Standards; 2014.

E. AWMAC/WI (NAAWS) - North American Architectural Woodwork Standards, U.S. Version 3.0; 2016.

F. NFPA 80 - Standard for Fire Doors and Other Opening Protectives; 2016.

G. NFPA 252 - Standard Methods of Fire Tests of Door Assemblies; 2012.

H. UL 10B - Standard for Fire Tests of Door Assemblies; Current Edition, Including All Revisions.

I. UL 10C - Standard for Positive Pressure Fire Tests of Door Assemblies; Current Edition, Including All Revisions.

J. UL 1784 - Standard for Air Leakage Tests of Door Assemblies; Current Edition, Including All Revisions.

K. WDMA I.S. 1A - Interior Architectural Wood Flush Doors; 2013.

1.04 SUBMITTALS

A. See Section 01 3000 - Administrative Requirements, for submittal procedures.

B. Product Data: Indicate door core materials and construction; veneer species, type and characteristics.

C. Shop Drawings: Show doors and frames, elevations, sizes, types, swings, undercuts, beveling, blocking for hardware, factory machining, factory finishing, cutouts for glazing and other details.

D. Samples: Submit two samples of door construction, 12 by 12 inch in size cut from top corner of door.

E. Samples: Submit two samples of door veneer, 12 by 12 inch in size illustrating wood grain, stain color, and sheen.

F. Certificate: Submit labels and certificates required by quality assurance and quality control programs.

G. Test Reports: Show compliance with specified requirements for the following:

1. Sound-retardant doors and frames; sealed panel tests are not acceptable.

H. Manufacturer's Installation Instructions: Indicate special installation instructions.

I. Specimen warranty.

J. Warranty, executed in Owner's name.

1.05 QUALITY ASSURANCE

A. Manufacturer Qualifications: Company specializing in manufacturing the products specified in this section, with not less than three years of documented experience.

B. Installer Qualifications: Company specializing in performing work of the type specified in this section, with not less than three years of documented experience.

1.06 DELIVERY, STORAGE, AND HANDLING

A. Package, deliver and store doors in accordance with specified quality standard.

B. Accept doors on site in manufacturer's packaging. Inspect for damage.

C. Protect doors with resilient packaging sealed with heat shrunk plastic. Do not store in damp or wet areas; or in areas where sunlight might bleach veneer. Seal top and bottom edges with tinted sealer if stored more than one week. Break seal on site to permit ventilation.

1.07 PROJECT CONDITIONS

A. Coordinate the work with door opening construction, door frame and door hardware installation.

1.08 WARRANTY

A. Interior Doors: Provide manufacturer's warranty for the life of the installation.

B. Include coverage for delamination of veneer, warping beyond specified installation tolerances, defective materials, telegraphing core construction, and other possible defects.

PART 2 PRODUCTS

2.01 MANUFACTURERS

A. Wood Veneer Faced Doors:

B. Wood Veneer Faced Doors:

1. Eggers Industries: www.eggersindustries.com.
2. Graham Wood Doors: www.grahamdoors.com.
3. Marshfield DoorSystems, Inc: www.marshfielddoors.com.
4. Algoma Hardware.
5. Oshkosh Architectural Door Company.
6. VT Industries, Inc: www.vtindustries.com.
7. Substitutions: See Section 01 6000 - Product Requirements.

2.02 DOORS

A. Doors: Refer to drawings for locations and additional requirements.

1. Quality Standard: Custom Grade, Heavy Duty performance, in accordance with WDMA I.S. 1A.
2. Wood Veneer Faced Doors: 5-ply unless otherwise indicated.

B. Interior Doors: 1-3/4 inches (44 mm) thick unless otherwise indicated; flush construction.

1. Provide solid core doors at each location.

2. Fire Rated Doors: Tested to ratings indicated on drawings in accordance with UL 10C - Positive Pressure; Underwriters Laboratories Inc (UL) or Intertek/Warnock Hersey (WHI) labeled without any visible seals when door is open.
3. Sound Retardant Doors: Minimum STC of 45, calculated in accordance with ASTM E413, tested in accordance with ASTM E90.
4. Wood veneer facing with factory transparent finish .

2.03 DOOR AND PANEL CORES

A. Non-Rated Solid Core and 20 Minute Rated Doors: Type structural composite lumber core (SCLC), plies and faces as indicated.

B. Fire-Rated Doors: Mineral core type, with fire resistant composite core (FD), plies and faces as indicated above; with core blocking as required to provide adequate anchorage of hardware without through-bolting.

C. Sound Resistant Doors: Equivalent to type, with particleboard core (PC) construction with core as required to achieve STC rating specified; plies and faces as indicated above.

2.04 DOOR FACINGS

A. Veneer Facing for Transparent Finish: Select white maple, veneer grade in accordance with quality standard indicated, quarter cut, with book match between leaves of veneer, running match of spliced veneer leaves assembled on door or panel face.
   1. Vertical Edges: Any option allowed by quality standard for grade.
   2. Pairs: Pair match each pair; set match pairs within 10 feet (3 m) of each other when doors are closed.

B. Facing Adhesive: Type I - waterproof or Type II - water resistant.

2.05 DOOR CONSTRUCTION

A. Fabricate doors in accordance with door quality standard specified.

B. Cores Constructed with stiles and rails:
   1. Provide solid blocks at lock edge and top of door for closer for hardware reinforcement.
   2. Provide solid blocking for other throughbolted hardware.

C. Factory machine doors for hardware other than surface-mounted hardware, in accordance with hardware requirements and dimensions.

D. Factory fit doors for frame opening dimensions identified on shop drawings, with edge clearances in accordance with specified quality standard.

E. Provide edge clearances in accordance with the quality standard specified.

2.06 FACTORY FINISHING - WOOD VENEER DOORS

A. Meet or exceed WDMA I.S. 1-A-04 specifications for a TR-6 catalyzed polyurethane finish system. Factory finish to be water based stain and UV curable polyester urethane finish system that complies with all applicable Federal and State regulations for Volatile Organic Compounds (VOC) and Hazardous Air Pollutants (HAP) emission limitations per the EPA Clean Air Act.

B. Finish work in accordance with AWI/AWMAC/WI (AWS) or AWMAC/WI (NAAWS), Section 5 - Finishing for grade specified and as follows:
   1. Transparent:
      a. System - 11, Polyurethane, Catalyzed.
      b. Stain: As selected by Architect.
      c. Sheen: Satin.

C. Factory finish doors in accordance with approved sample.

D. Seal door top edge with color sealer to match door facing.

2.07 ACCESSORIES

A. Glazing: As specified in Section 08 8000.

B. Glazing Stops: Wood, of same species as door facing, mitered corners; prepared for countersink style tamper proof screws.

1. At fire-rated doors, veneer wrap fire-rated flush glazing bead with same species as door facing.
2. Where vision lite sizes exceed those tested for manufacturer's tested glazing bead, provide veneer-wrapped metal door lite frame by All Metal Stamping, Inc.: www.allmetalstamping.com, that meets opening requirements.
3. Verify that glazing stops do not interfere with mounting or operation of finish door hardware.

PART 3 EXECUTION

3.01 EXAMINATION

A. Verify existing conditions before starting work.

B. Verify that opening sizes and tolerances are acceptable.

C. Do not install doors in frame openings that are not plumb or are out-of-tolerance for size or alignment.

3.02 INSTALLATION

A. Install doors in accordance with manufacturer's instructions and specified quality standard.

1. Install fire-rated doors in accordance with NFPA 80 requirements.

B. Factory-Finished Doors: Do not field cut or trim; if fit or clearance is not correct, replace door.

C. Use machine tools to cut or drill for hardware.

D. Coordinate installation of doors with installation of frames and hardware.

E. Coordinate installation of glazing.

F. Install door louvers plumb and level.

3.03 TOLERANCES

A. Conform to specified quality standard for fit and clearance tolerances.

B. Conform to specified quality standard for telegraphing, warp, and squareness.

C. Maximum Vertical Distortion (Bow): 1/8 inch (3 mm) measured with straight edge or taut string, top to bottom, over an imaginary 36 by 84 inches (915 by 2130 mm) surface area.

D. Maximum Width Distortion (Cup): 1/8 inch (3 mm) measured with straight edge or taut string, edge to edge, over an imaginary 36 by 84 inches (915 by 2130 mm) surface area.

3.04 ADJUSTING

A. Adjust doors for smooth and balanced door movement.

B. Adjust closers for full closure.

END OF SECTION

SECTION 08 1613
FRP FLUSH DOORS

PART 1 - GENERAL

1.01 SECTION INCLUDES

A. Fiberglass reinforced polyester (FRP) flush doors in aluminum storefront frames.

1.02 RELATED SECTIONS

A. Section 087100 - Door Hardware.

B. Section 084100 - Metal Framed Storefronts

1.03 REFERENCES

A. AAMA 1503-98 - Thermal Transmittance and Condensation Resistance of Windows, Doors and Glazed Wall Sections.

B. ANSI A250.4 - Test Procedure and Acceptance Criteria for Physical Endurance for Steel Doors and Hardware Reinforcings.

C. ASTM B 117 - Operating Salt Spray (Fog) Apparatus.

D. ASTM B 209 - Aluminum and Aluminum-Alloy Sheet and Plate.

E. ASTM B 221 - Aluminum-Alloy Extruded Bars, Rods, Wire, Profiles, and Tubes.

F. ASTM D 256 - Determining the Pendulum Impact Resistance of Notched Specimens of Plastics.

G. ASTM D 543 - Evaluating the Resistance of Plastics to Chemical Reagents.

H. ASTM D 570 - Water Absorption of Plastics.

I. ASTM D 638 - Tensile Properties of Plastics.

J. ASTM D 790 - Flexural Properties of Unreinforced and Reinforced Plastics and Electrical Insulating Materials.

K. ASTM D 1621 - Compressive Properties of Rigid Cellular Plastics.

L. ASTM D 1623 - Tensile and Tensile Adhesion Properties of Rigid Cellular Plastics.

M. ASTM D 2126 - Response of Rigid Cellular Plastics to Thermal and Humid Aging.

N. ASTM D 2583 - Indentation Hardness of Rigid Plastics by Means of a Barcol Impressor.

O. ASTM D 5420 - Impact Resistance of Flat Rigid Plastic Specimens by Means of a Falling Weight.

P. ASTM D 6670-01 - Standard Practice for Full-Scale Chamber Determination of Volatile Organic Emissions from Indoor Materials/Products.

Q. ASTM E 84 - Surface Burning Characteristics of Building Materials.

R. ASTM E 90 - Laboratory Measurement of Airborne Sound Transmission Loss of Building Partitions.

S. ASTM E 283 - Determining the Rate of Air Leakage Through Exterior Windows, Curtain Walls, and Doors Under Specified Pressure Differences Across the Specimen.

T. ASTM E 330 - Structural Performance of Exterior Windows, Curtain Walls, and Doors by Uniform Static Air Pressure Difference.

U. ASTM E 331 - Water Penetration of Exterior Windows, Skylights, Doors, and Curtain Walls by Uniform Static Air Pressure Difference.

V. ASTM F 476 - Security of Swinging Door Assemblies.

W. SFBC PA 201 - Impact Test Procedures.

X. SFBC PA 203 - Criteria for Testing Products Subject to Cyclic Wind Pressure Loading.

Y. SFBC 3603.2 (b)(5) - Forced Entry Resistance Test.

1.04 PERFORMANCE REQUIREMENTS

A. General: Provide door assemblies that have been designed and fabricated to comply with specified performance requirements, as demonstrated by testing manufacturer's corresponding standard systems.

B. Air Infiltration: For a single door 3'-0" x 7'-0", test specimen shall be tested in accordance with ASTM E 283 at pressure differential of 6.24 psf. Door shall not exceed 0.90 cfm per linear foot of perimeter crack.

C. Water Resistance: For a single door 3'-0" x 7'-0", test specimen shall be tested in accordance with ASTM E 331 at pressure differential of 7.50 psf. Door shall not have water leakage.

D. Indoor air quality testing per ASTM D 6670-01: GREENGUARD Environmental Institute Certified including GREENGUARD for Children and Schools Certification.

E. Hurricane Test Standards, Single Door with Single-Point Latching:
   1. Uniform Static Load, ASTM E 330: Plus or minus 75 pounds per square foot.
   2. Forced Entry Test, 300 Pound Load Applied, SFBC 3603.2 (b)(5): Passed.
   3. Cyclic Load Test, SFBC PA 203: Plus or minus 53 pounds per square foot.
   4. Large Missile Impact Test, SFBC PA 201: Passed.

F. Swinging Door Cycle Test, Doors and Frames, ANSI A250.4: Minimum of 25,000,000 cycles.

G. Cycle Slam Test Method, NWWDA T.M. 7-90: Minimum 5,000,000 Cycles.

H. Swinging Security Door Assembly, Doors and Frames, ASTM F 476: Grade 40.

I. Salt Spray, Exterior Doors and Frames, ASTM B 117: Minimum of 500 hours.

J. Sound Transmission, Exterior Doors, STC, ASTM E 90: Minimum of 25.

K. Thermal Transmission, Exterior Doors, U-Value, AAMA 1503-98: Maximum of 0.29 BTU/hr x sf x degrees F. Minimum of 55 CRF value.

L. Surface Burning Characteristics, Class A Option On Interior Faces of FRP Exterior Panels and Both Faces of FRP Interior Panels, ASTM E 84:
   1. Flame Spread: Maximum of 25.
   2. Smoke Developed: Maximum of 450.

M. Impact Strength, FRP Doors and Panels, Nominal Value, ASTM D 256: 15.0 foot-pounds per inch of notch.

N. Tensile Strength, FRP Doors and Panels, Nominal Value, ASTM D 638: 14,000 psi.

O. Flexural Strength, FRP Doors and Panels, Nominal Value, ASTM D 790: 21,000 psi.

P. Water Absorption, FRP Doors and Panels, Nominal Value, ASTM D 570: 0.20 percent after 24 hours.

Q. Indentation Hardness, FRP Doors and Panels, Nominal Value, ASTM D 2583: 55.

R. Gardner Impact Strength, FRP Doors and Panels, Nominal Value, ASTM D 5420: 120 in-lb.

S. Abrasion Resistance, Face Sheet, Taber Abrasion Test, 25 Cycles at 1,000 Gram Weight with CS-17 Wheel: Maximum of 0.029 average weight loss percentage.

T. Stain Resistance, ASTM D 1308: Face sheet unaffected after exposure to red cabbage, tea, and tomato acid. Stain removed easily with mild abrasive or FRP cleaner when exposed to crayon and crankcase oil.

U. Chemical Resistance, ASTM D 543. Excellent rating.
   1. Acetic acid, Concentrated.
   2. Ammonium Hydroxide, Concentrated.
   3. Citric Acid, 10%.
   4. Formaldehyde.
   5. Hydrochloric Acid, 10%
   6. Sodium hypochlorite, 4 to 6 percent solution.

V. Compressive Strength, Foam Core, Nominal Value, ASTM D 1621: 79.9 psi.

W. Compressive Modulus, Foam Core, Nominal Value, ASTM D 1621: 370 psi.

X. Tensile Adhesion, Foam Core, Nominal Value, ASTM D 1623: 45.3 psi.

Y. Thermal and Humid Aging, Foam Core, Nominal Value, 158 Degrees F and 100 Percent Humidity for 14 Days, ASTM D 2126: Minus 5.14 percent volume change.

1.05 SUBMITTALS

A. Product Data: Submit manufacturer's product data, including description of materials, components, fabrication, finishes, and installation.

B. Shop Drawings: Submit manufacturer's shop drawings, including elevations, sections, and details, indicating dimensions, tolerances, materials, fabrication, doors, panels, framing, hardware schedule, and finish.

C. Samples:
   1. Door: Submit manufacturer's sample of door showing face sheets, core, framing, and finish.
   2. Color: Submit manufacturer's samples of standard colors of doors and frames.

D. Test Reports: Submit certified test reports from qualified independent testing agency indicating doors comply with specified performance requirements.

E. Manufacturer's Project References: Submit list of successfully completed projects including project name and location, name of architect, and type and quantity of doors manufactured.

F. Maintenance Manual: Submit manufacturer's maintenance and cleaning instructions for doors, including maintenance and operating instructions for hardware.

G. Warranty: Submit manufacturer's warranty.

1.06 QUALITY ASSURANCE

A. Manufacturer's Qualifications:
   1. Continuously engaged in manufacturing of doors of similar type to that specified, with a minimum of 5 years successful experience.

1.07 DELIVERY, STORAGE, AND HANDLING

A. Delivery: Deliver materials to site in manufacturer's original, unopened containers and packaging, with labels clearly identifying opening door mark and manufacturer.

B. Storage: Store materials in clean, dry area indoors in accordance with manufacturer's instructions.

C. Handling: Protect materials and finish from damage during handling and installation.

1.08 WARRANTY

A. Warrant doors, frames, and factory hardware against failure in materials and workmanship, including excessive deflection, faulty operation, defects in hardware installation, and deterioration of finish or construction in excess of normal weathering.

B. Warranty Period: Ten years starting on date of shipment. In addition, a limited lifetime (while the door is in its specified application in its original installation) warranty covering: failure of corner joinery, core deterioration, delamination or bubbling of door skin.

PART 2- PRODUCTS

2.01 MANUFACTURER

A. Basis of specification: Model SL-17 Flush FRP Doors by Special-Lite, Inc., PO Box 6, Decatur, Michigan 49045. Toll Free (800) 821-6531. Phone (269) 423-7068. Fax (800) 423-7610. Web Site www.special-lite.com. E-Mail info@special-lite.com.

B. Substitutions: See Section 01600 - Product Requirements

C. The following manufacturers/products are also approved:
   1. Ceco Door Model FRP
   2. Vale Doors Model V-250
   3. Commercial Door Systems Model F200

2.02 FRP FLUSH DOORS

A. Model: Flush Doors with fiberglass reinforced polyester (FRP) face sheets.

B. Door Opening Size: As indicated on the Drawings.

C. Construction:
   1. Door Thickness: 1-3/4 inches.
   2. Stiles and Rails: Aluminum Alloy 6063-T5, minimum of 2-5/16-inch depth.
   3. Corners: Mitered.
   4. Provide joinery of 3/8-inch diameter full-width tie rods through extruded splines top and bottom integral to standard tubular shaped stiles and rails reinforced to accept hardware as specified.
   5. Securing Internal Door Extrusions: 3/16-inch angle blocks and locking hex nuts for joinery.
   6. Furnish extruded stiles and rails with integral reglets to accept face sheets. Lock face sheets into place to permit flush appearance.
   7. Extrude top and bottom rail legs for interlocking continuous weather bar.
   8. Meeting Stiles: Pile brush weatherseals. Extrude meeting stile to include integral pocket to accept pile brush weatherseals.
   9. Bottom of Door: Install bottom weather bar with nylon brush weatherstripping into extruded interlocking edge of bottom rail.

D. Face Sheet:
   1. Material: FRP, 0.120-inch thickness, finish color throughout.
   2. Protective coating: Abuse-resistant engineered surface. Provide FRP with protective coating, or equal.
   3. Texture: Pebble.

E. Color: To be selected from manufacturer's standard range.

F. Core:
   1. Material: Poured-in-place polyurethane foam.

2. Density: Minimum of 5 pounds per cubic foot.
3. R-Value: Minimum of 9.

G. Cutouts:
1. Manufacture doors with cutouts for required vision lites, louvers, and panels.
2. Factory install vision lites, louvers, and panels.

H. Hardware:
1. Premachine doors in accordance with templates from specified hardware manufacturers and hardware schedule.

2.03 MATERIALS

A. Aluminum Members:
1. Extrusions: ASTM B 221.
2. Sheet and Plate: ASTM B 209.
3. Alloy and Temper: As required by manufacturer for strength, corrosion resistance, application of required finish, and control of color.

B. Fasteners:
1. Material: Aluminum, 18-8 stainless steel, or other noncorrosive metal.
2. Compatibility: Compatible with items to be fastened.
3. Exposed Fasteners: Screws with finish matching items to be fastened.

2.04 FABRICATION

A. Sizes and Profiles: Required sizes for door and frame units, and profile requirements shall be as indicated on the Drawings.

B. Coordination of Fabrication: Field measure before fabrication and show recorded measurements on shop drawings.

C. Assembly:
1. Complete cutting, fitting, forming, drilling, and grinding of metal before assembly.
2. Remove burrs from cut edges.

D. Fit:
1. Maintain continuity of line and accurate relation of planes and angles.
2. Secure attachments and support at mechanical joints with hairline fit at contacting members.

2.05 ALUMINUM DOOR FRAMING SYSTEMS

A. Storefront Framing: See Section 084113: Aluminum-Framed Entrances and Storefronts.

2.06 HARDWARE

A. Premachine doors in accordance with templates from specified hardware manufacturers and hardware schedule.

2.07 VISION LITES

A. Factory Glazing: 1-inch glass tempered insulating units. See Section 088000.

B. Lites in Exterior Doors: Allow for thermal expansion.

C. Rectangular Lites:
1. Size: As indicated on the Drawings.
2. Factory glazed with screw-applied aluminum stops with paint finish to match perimeter door rails.

2.08 ALUMINUM FINISHES

A. Painted Finishes: Kynar 500 or Hylar 5000; 2-coat system; color: white.

PART 3 - EXECUTION

3.01 EXAMINATION

A. Examine areas to receive doors. Notify Architect of conditions that would adversely affect installation or subsequent use. Do not proceed with installation until unsatisfactory conditions are corrected.

3.02 PREPARATION

A. Ensure openings to receive frames are plumb, level, square, and in tolerance.

3.03 INSTALLATION

A. Install doors in accordance with manufacturer's instructions.

B. Install doors plumb, level, square, true to line, and without warp or rack.

C. Anchor frames securely in place.

D. Separate aluminum from other metal surfaces with bituminous coatings or other means approved by Architect.

E. Set thresholds in bed of mastic and backseal.

F. Install exterior doors to be weathertight in closed position.

G. Repair minor damages to finish in accordance with manufacturer's instructions and as approved by Architect.

H. Remove and replace damaged components that cannot be successfully repaired as determined by Architect.

3.04 FIELD QUALITY CONTROL

A. Manufacturer's Field Services: Manufacturer's representative shall provide technical assistance and guidance for installation of doors.

3.05 ADJUSTING

A. Adjust doors, hinges, and locksets for smooth operation without binding.

3.06 CLEANING

A. Clean doors promptly after installation in accordance with manufacturer's instructions.

B. Do not use harsh cleaning materials or methods that would damage finish.

3.07 PROTECTION

A. Protect installed doors to ensure that, except for normal weathering, doors will be without damage or deterioration at time of substantial completion.

END OF SECTION

SECTION 08 1700
INTEGRATED DOOR OPENING ASSEMBLIES

PART 1 GENERAL

1.01 SECTION INCLUDES

A. Factory-assembled and factory-finished hollow metal doors and frames, including hardware for door opening assemblies.

1.02 RELATED REQUIREMENTS

A. Section 08 7100 - Door Hardware: Door hardware submittal requirements.

1.03 REFERENCE STANDARDS

A. ADA Standards - Americans with Disabilities Act (ADA) Standards for Accessible Design; 2010.

B. ANSI/SDI A250.8 - Specifications for Standard Steel Doors and Frames (SDI-100); 2014.

C. ANSI/SDI A250.10 - Test Procedure and Acceptance Criteria for Prime Painted Steel Surfaces for Steel Doors and Frames; 2011.

D. AWI/AWMAC/WI (AWS) - Architectural Woodwork Standards; 2014.

E. AWMAC/WI (NAAWS) - North American Architectural Woodwork Standards, U.S. Version 3.0; 2016.

F. BHMA A156.3 - American National Standard for Exit Devices; 2014.

G. BHMA A156.18 - American National Standard for Materials and Finishes; 2012.

H. BHMA A156.32 - Integrated Door Opening Assemblies; 2014.

I. ICC A117.1 - Accessible and Usable Buildings and Facilities; 2009.

J. NFPA 80 - Standard for Fire Doors and Other Opening Protectives; 2016.

K. NFPA 252 - Standard Methods of Fire Tests of Door Assemblies; 2012.

1.04 SUBMITTALS

A. Product Data: Materials and details of design and construction, hardware locations, reinforcement type and locations, anchorage and fastening methods, and finishes.

B. Shop Drawings: Indicate details of each opening showing elevations, glazing, frame profiles, hardware, and different finish locations, if any.

C. Door Hardware Schedule: Provided at end of section and containing detailed list of each hardware item to be provided on each integrated door opening.

1. Refer to Section 08 7100 for additional submittal requirements.

D. Samples: Submit two samples of exposed door finish materials, in manufacturer's standard sizes, showing factory finishes and colors as selected.

E. Certificate: Certify that products of this section meet or exceed specified requirements.

F. Installation Instructions: Manufacturer's published instructions, including any special installation instructions relating to this project.

G. Warranty Documentation: Submit manufacturer warranty and ensure that forms have been completed in Owner's name and registered with manufacturer.

1.05 QUALITY ASSURANCE

A. Manufacturer Qualifications: Company specializing in manufacturing the products specified in this section with minimum three years documented experience.

B. Installer Qualifications: Company specializing in performing work of the type specified and with minimum three years of documented experience.

1.06 DELIVERY, STORAGE, AND HANDLING

A. Deliver units preassembled and prefinished, with door hardware mounted and functioning, and packaged to protect contents from damage.

B. Store in a clean, dry, and ventilated space having controlled temperature and relative humidity between 30 and 60 percent and in accordance with manufacturer's written instructions.

C. Stack doors flat and off the floor to prevent warping.

1.07 WARRANTY

A. Provide manufacturer's standard warranty against defects in material and workmanship:
   1. For entire door opening assembly, provide five year warranty period after Date of Substantial Completion.
   2. Warranty shall be void unless units are stored in accordance with manufacturer's instructions prior to installation.

PART 2 PRODUCTS

2.01 MANUFACTURERS

A. Integrated Door Opening Assemblies Manufacturers:
   1. Adams Rite - The Rite Door, an Assa Abloy Group company: www.ritedoor.com.
   2. Syntegra Door Systems by Door Systems, Inc: www.doorsysinc.com/sle.
   3. Total Door Systems: www.totaldoor.com.

2.02 ASSEMBLIES

A. Door, Frame, and Hardware Assemblies: Provide fully functional, factory-assembled and factory-finished door opening units, complete with door, frame, and hardware; complying with BHMA A156.32 and specified requirements.
   1. Accessibility: Comply with ICC A117.1 and ADA Standards.

B. Applications:
   1. Door opening assemblies include cross corridor as indicated on drawings.
      a. Provide double door openings as indicated on drawings.
      b. Provide independent latching pairs.

2.03 PERFORMANCE REQUIREMENTS

A. Comply with requirements of local building code and authorities having jurisdiction, and the following:
   1. Force to Open Interior Swinging Egress Doors, Non-Fire Doors: Not more than 5 pounds.
   2. Force to Release Latch for Other Swinging Doors: Not more than 15 pounds to release latch, not more than 30 pounds to set door in motion, and not more than 15 pounds to swing door to full open position.
   3. Fire-Rated Doors: Comply with NFPA 80 and NFPA 252.
      a. Hourly Fire-Rating: As indicated on drawings.

2.04 COMPONENTS

A. Hollow Metal Doors: Doors complying with ANSI/SDI A250.8 construction requirements exceeding Level 3 and Physical Performance Level A, Model 1 - Full Flush; electrogalvanized prior to finishing; manufacturer's standard core and reinforcements.
   1. Door Thickness: 1-3/4 inches.
   2. Fire-Rated Doors: 16 gage, 0.053 inch thick faces and edges.

B. Hollow Metal Door Frames: Formed steel cased opening complying with ANSI/SDI A250.8 construction requirements exceeding Level 3 and Physical Performance Level A; electrogalvanized prior to finishing.

2.05 DOOR HARDWARE

A. Manufacturers: Door hardware manufacturers are as determined by manufacturer of Integrated Door Opening Assemblies in compliance with BHMA A156.32 requirements for applications indicated.

B. Flush Panel Exit Devices: Provide flush panel exit device, recessed into door; extruded aluminum, selected anodized finish; complying with BHMA A156.3, Grade 1.
   1. Projection From Face of Door: Maximum of 3/16 inch when door is open, minimum of 1-1/8 inch when closed.
   2. Face Insert: To match door finish.

2.06 FINISHES

A. Doors and Frames:
   1. Primed Frames: Rust-inhibiting, complying with ANSI/SDI A250.10, door manufacturer's standard.
   2. Applied Wood Veneer: Factory finish wood veneer in accordance with AWI/AWMAC/WI (AWS) or AWMAC/WI (NAAWS), Section 5 - Finishing with Premium Grade, unless otherwise indicated, and as follows:
      a. Transparent:
         1) System - 11, Polyurethane, Catalyzed.
         2) Stain/Color: As selected by Architect.
         3) Sheen: Flat.

B. Door Hardware: Provide door hardware of same finish, unless otherwise indicated.
   1. Finish: 628; satin aluminum, clear anodized, with aluminum base material (former US equivalent US28); BHMA A156.18.

PART 3 EXECUTION

3.01 EXAMINATION

A. Verify existing conditions before starting this Work.

B. Verify that opening sizes and tolerances are acceptable.

3.02 INSTALLATION

A. Install doors in accordance with manufacturer's requirements and the specified performance requirements.

B. Install fire rated units in accordance with NFPA 80.

C. Coordinate frame anchor placement with wall construction.

D. Touch up damaged factory finishes.

3.03 TOLERANCES

A. Clearances Between Door and Frame: As specified in ANSI/SDI A250.8.

B. Maximum Diagonal Distortion: 1/16 in measured with straight edge, corner to corner.

3.04 ADJUSTING

A. Adjust for smooth and balanced door movement.

END OF SECTION

SECTION 08 3100
ACCESS DOORS AND PANELS

PART 1 GENERAL

1.01 SECTION INCLUDES

A. Wall and ceiling access door and frame units.

1.02 RELATED REQUIREMENTS

A. Section 09 9123 - Interior Painting: Field paint finish.

1.03 REFERENCE STANDARDS

A. UL (FRD) - Fire Resistance Directory; current edition.

1.04 SUBMITTALS

A. See Section 01 3000 - Administrative Requirements, for submittal procedures.

B. Product Data: Provide sizes, types, finishes, hardware, scheduled locations, and details of adjoining work.

C. Manufacturer's Installation Instructions: Indicate installation requirements.

D. Project Record Documents: Record actual locations of each access unit.

1.05 QUALITY ASSURANCE

A. Manufacturer Qualifications: Company specializing in manufacturing the products specified in this section with minimum three years documented experience.

PART 2 PRODUCTS

2.01 ACCESS DOORS AND PANELS ASSEMBLIES

A. Wall-Mounted Units:
1. Location: As indicated on drawings.
2. Material: Steel.
3. Size: 24 inch by 30 inch.
4. Door/Panel: Hinged, standard duty, with tool-operated spring or cam lock and no handle.
5. Gypsum Board Mounting Criteria: Provide drywall bead frame with door surface flush with wall surface.
6. Masonry Mounting Criteria: Provide surface-mounted frame with door surface flush with frame surface.

B. Wall-Mounted Units in Wet Areas:
1. Location: As indicated on drawings.
2. Material: Steel, hot-dipped zinc, or zinc-aluminum-alloy coated.
3. Size: 24 inch by 30 inch.
4. Door/Panel: Hinged, standard duty, with tool-operated spring or cam lock and no handle.
5. Gypsum Board Mounting Criteria: Provide drywall bead frame with door surface flush with wall surface.
6. Masonry Mounting Criteria: Provide surface-mounted frame with door surface flush with frame surface.

2.02 WALL AND CEILING MOUNTED UNITS

A. Manufacturers:
1. ACUDOR Products Inc: www.acudor.com/#sle.
2. Babcock-Davis: www.babcockdavis.com/#sle.

3. Milcor, Inc: www.milcorinc.com.

B. Wall and Ceiling Mounted Units: Factory fabricated door and frame, fully assembled units with corner joints welded, filled and ground flush; square and without rack or warp; coordinate requirements with type of installation assembly being used for each unit.
   1. Style: Exposed frame with door surface flush with frame surface.
      a. Gypsum Board Mounting Criteria: Use drywall bead type frame.
   2. Door Style: Single thickness with rolled or turned in edges.
   3. Frames: 16 gage, 0.0598 inch, minimum thickness.
   4. Single Steel Sheet Door Panels: 1/16 inch, minimum thickness.
   5. Units in Fire-Rated Assemblies: Fire rating as required by applicable code for fire-rated assembly that access doors are being installed.
      a. Provide products listed by UL (FRD) as suitable for purpose indicated.
      b. Provide certificate of compliance from authorities having jurisdiction indicating approval of fire rated doors.
   6. Steel Finish: Primed.
   7. Primed and Factory Finish: Polyester powder coat; color as selected by Architect from manufacturer's standard colors.
   8. Hardware:
      a. Hardware for Fire-Rated Units: As required for listing.
      b. Hinges for Non-Fire-Rated Units: Concealed, constant force closure spring type.

PART 3 EXECUTION

3.01 EXAMINATION

A. Verify that rough openings are correctly sized and located.

B. Begin installation only after substrates have been properly prepared, and if the responsibility of another installer, notify Architect of unsatisfactory preparation before proceeding.

3.02 PREPARATION

A. Clean surfaces thoroughly prior to proceeding with this work.

B. Prepare surfaces using methods recommended by manufacturer for applicable substrates in accordance with project conditions.

3.03 INSTALLATION

A. Install units in accordance with manufacturer's instructions.

B. Install frames plumb and level in openings, and secure units rigidly in place.

C. Position units to provide convenient access to concealed equipment when necessary.

END OF SECTION

SECTION 08 3323
OVERHEAD COILING DOORS

PART 1 GENERAL

1.01 SECTION INCLUDES

A. Overhead coiling doors , operating hardware, fire-rated, non-fire-rated, and exterior, electric operation.

B. Wiring from electric circuit disconnect to operator to control station.

1.02 RELATED REQUIREMENTS

A. Section 08 3326 - Overhead Coiling Grilles.

B. Section 08 7100 - Door Hardware: Cylinder cores and keys.

C. Section 26 0583 - Wiring Connections: Power to disconnect.

1.03 REFERENCE STANDARDS

A. ASTM A36/A36M - Standard Specification for Carbon Structural Steel; 2014.

B. ASTM A123/A123M - Standard Specification for Zinc (Hot-Dip Galvanized) Coatings on Iron and Steel Products; 2015.

C. ASTM A653/A653M - Standard Specification for Steel Sheet, Zinc-Coated (Galvanized) or Zinc-Iron Alloy-Coated (Galvannealed) by the Hot-Dip Process; 2015.

D. ITS (DIR) - Directory of Listed Products; current edition.

E. NEMA 250 - Enclosures for Electrical Equipment (1000 Volts Maximum); 2014.

F. NEMA ICS 2 - Industrial Control and Systems Controllers, Contactors and Overload Relays Rated 600 Volts; 2000 (R2005), with errata, 2008.

G. NEMA MG 1 - Motors and Generators; 2014.

H. NFPA 80 - Standard for Fire Doors and Other Opening Protectives; 2016.

I. UL (DIR) - Online Certifications Directory; current listings at database.ul.com.

1.04 SUBMITTALS

A. Product Data: Provide, , electrical equipment, and component connections and details.

B. Shop Drawings: Indicate pertinent dimensioning, anchorage methods, hardware locations, and installation details.

C. Manufacturer's Installation Instructions: Indicate installation sequence and procedures, adjustment and alignment procedures.

D. Maintenance Data: Indicate lubrication requirements and frequency and periodic adjustments required.

1.05 QUALITY ASSURANCE

A. Products Requiring Electrical Connection: Listed and classified by UL (DIR) as suitable for the purpose specified and indicated.

PART 2 PRODUCTS

2.01 MANUFACTURERS

A. Overhead Coiling Doors:

1. Cornell Iron Works, Inc; Product ESD20: www.cornelliron.com. is the basis of design.
2. Other Approved manufacturers:

a. The Cookson Company: www.cooksondoor.com.
b. Wayne-Dalton, a Division of Overhead Door Corporation: www.wayne-dalton.com.

B. Overhead Coiling Fire Doors:
1. Cornell Iron Works, Inc: www.cornelliron.com.

2.02 COILING DOORS

A. Exterior Coiling Doors: Steel slat curtain, insulated.
1. Capable of withstanding positive and negative wind loads of 20 psf, without undue deflection or damage to components.
2. Insulated Door Slat Material Requirements:
a. Flame Spread Index of 0 and a Smoke Developed Index of 10 as tested per ASTM E84.
b. Minimum Sound Transmission Class (STC) rating of 26 as tested per ASTM E90.
c. Minimum R-value of 8.0 (U-factor of 0.125) as calculated using the ASHRAE Handbook of Fundamentals.
d. Insulation to be CFC Free with an Ozone Depletion Potential (ODP) rating of zero.
3. Nominal Slat Size: 2 inches wide x required length.
4. Exterior Slat Finish: ASTM A 653 galvanized base coating treated with dual process rinsing agents in preparation of a chemical bonding, baked-on polyester base coat and a baked-on polyester finish coat.
5. Interior slat finish: Coating System and phosphate treatment followed by baked-on polyester powder coat, color as selected by Architect from manufacturer's standard color range, minimum 2.5 mils (0.065 mm) cured film thickness; ASTM D-3363 pencil hardness: H or better.
6. Guides: Angles; galvanized steel.
7. Hood Enclosure: Manufacturer's standard; primed steel.
8. Electric operation.
9. Mounting: Within framed opening.

B. Non-Fire-Rated Interior Coiling Doors: Steel slat curtain.
1. Single thickness slats.
2. Nominal Slat Size: 2 inches wide x required length.
3. Finish: Factory painted, phosphate treatment followed by baked-on polyester powder coat, minimum 2.5 mils (0.065 mm) cured film thickness; ASTM D-3363 pencil hardness: H or better.color as selected from manufacturer's standard color range.
4. Hood Enclosure: Manufacturer's standard; primed steel.
5. Electric operation.
6. Mounting: Within framed opening.

C. Overhead Acoustic Coiling Doors
1. Manufacturers:
a. Manufacturer and Type: Cornel Cookson Thermiser ESD20
b. Equivalent Products by other manufacturers are also acceptable
2. Operation: Electric motor
3. Materials:
a. Insulated, STC 32 minimum
4. Finish: Factory powder-coat, selected from manufacturer’s standard colors.
5. Locations: Scene Shop and Stage

D. Fire-Rated Coiling Doors: Steel slat curtain; conform to NFPA 80.

1. Provide products listed and labeled by ITS (DIR) or UL (DIR) as suitable for the purpose specified and indicated.
2. Oversized Openings: Provide certificate of compliance from authorities having jurisdiction indicating approval of fire rated units and operating hardware assembly.
3. Nominal Slat Size: 2 inches wide by required length.
4. Finish: Factory painted, color as selected.
5. Hood Enclosure: Manufacturer's standard; primed steel.
6. Fire Alarm Release Mechanism: Electric-motor operated from fire alarm system.
7. Electric operation.
8. Locking Devices: Lock and latch handle on outside.

2.03 MATERIALS

A. Curtain Construction: Interlocking slats.
   1. Slat Ends: Alternate slats fitted with end locks to act as wearing surface in guides and to prevent lateral movement.
   2. Curtain Bottom: Fitted with angles to provide reinforcement and positive contact in closed position.
   3. Weatherstripping (exterior doors): Moisture and rot proof, resilient type.
      a. Bottom Bar, Motor Operated Doors: Sensing/weather edge with neoprene astragal extending full width of door bottom bar.
      b. Guides: Replaceable vinyl strip on guides sealing against fascia side of curtain.
      c. Lintel Seal: Nylon brush seal fitted at door header to impede air flow.
      d. Hood: Neoprene/rayon baffle to impede air flow above coil.

B. Steel Slats: Minimum 20 gage (0.8 mm thick)ASTM A 653/A 653M galvanized steel sheet.
   1. Galvanizing: Minimum G90/Z275 coating.

C. Guide Construction: Continuous, of profile to retain door in place with snap-on trim, mounting brackets of same metal.

D. Steel Guides: Formed from galvanized steel sheet, 3/16 inch thick; complying with ASTM A 653/A 653M.
   1. Galvanizing: Minimum G90/Z275 coating.

E. Hood Enclosure: Internally reinforced to maintain rigidity and shape.
   1. Minimum thickness; 24 gage, 0.0239 inch.
   2. ASTM A 653 galvanized base coating treated with dual process rinsing agents in preparation for chemical bonding, baked-on base coat and baked-on polyester finish coat.

F. Lock Hardware:
   1. Cylindrical Locking Mechanism: Latchset lock cylinder, specified in Section 08 7100.
   2. For motor operated units, additional lock or latching mechanisms are not required.
   3. Latch Handle: Manufacturer's standard.

G. Roller Shaft Counterbalance: Steel pipe and helical steel spring system, capable of producing torque sufficient to ensure smooth operation of curtain from any position and capable of holding position at mid-travel; with adjustable spring tension; requiring 25 lb nominal force to operate.

2.04 ELECTRIC OPERATION

A. Electric Operators:
   1. Mounting: Side mounted.
   2. Motor Rating: 1/2 hp; continuous duty.

3. Motor Voltage: 480 volt, three phase, 60 Hz.
4. Motor Controller: NEMA ICS 2, full voltage, reversing magnetic motor starter.
5. Controller Enclosure: NEMA 250, Type 1.
6. Opening Speed: 12 inches per second.
7. Brake: Adjustable friction clutch type, activated by motor controller.
8. Manual override in case of power failure.

B. Control Station: Standard three button (OPEN-STOP-CLOSE) momentary control for each operator.
1. 24 volt circuit.
2. Recessed.

C. Safety Edge: Located at bottom of curtain, full width, electro-mechanical sensitized type, wired to stop operator upon striking object, hollow neoprene covered.

PART 3 EXECUTION

3.01 EXAMINATION

A. Verify that opening sizes, tolerances and conditions are acceptable.

3.02 INSTALLATION

A. Install units in accordance with manufacturer's instructions.

B. Install fire-rated doors in accordance with NFPA 80.

C. Use anchorage devices to securely fasten assembly to wall construction and building framing without distortion or stress.

D. Securely and rigidly brace components suspended from structure. Secure guides to structural members only.

E. Fit and align assembly including hardware; level and plumb, to provide smooth operation.

F. Coordinate installation of electrical service with Section 26 0583.

G. Complete wiring from disconnect to unit components.

H. Complete wiring from fire alarm system.

I. Install perimeter trim and closures.

3.03 TOLERANCES

A. Maintain dimensional tolerances and alignment with adjacent work.

B. Maximum Variation From Plumb: 1/16 inch.

C. Maximum Variation From Level: 1/16 inch.

D. Longitudinal or Diagonal Warp: Plus or minus 1/8 inch per 10 ft straight edge.

3.04 ADJUSTING

A. Adjust operating assemblies for smooth and noiseless operation.

3.05 CLEANING

A. Clean installed components.

B. Remove labels and visible markings.

END OF SECTION

SECTION 08 3326
OVERHEAD COILING GRILLES

PART 1 GENERAL

1.01 SECTION INCLUDES

A. Overhead coiling metal grilles and operating hardware, electric operation.

B. Wiring from electric circuit disconnect to operator to control station.

1.02 RELATED REQUIREMENTS

A. Section 083323 - Overhead Coiling Doors.

B. Section 08 7100 - Door Hardware: Cylinder cores and keys.

C. Section 092600 - Gypsum Board Assemblies.

D. Section 26 0583 - Wiring Connections: Power to disconnect.

1.03 REFERENCE STANDARDS

A. ASTM A123/A123M - Standard Specification for Zinc (Hot-Dip Galvanized) Coatings on Iron and Steel Products; 2015.

B. ASTM B221 - Standard Specification for Aluminum and Aluminum-Alloy Extruded Bars, Rods, Wire, Profiles, and Tubes; 2014.

C. ASTM B221M - Standard Specification for Aluminum and Aluminum-Alloy Extruded Bars, Rods, Wire, Profiles, and Tubes (Metric); 2013.

D. ITS (DIR) - Directory of Listed Products; current edition.

E. NEMA 250 - Enclosures for Electrical Equipment (1000 Volts Maximum); 2014.

F. NEMA ICS 2 - Industrial Control and Systems Controllers, Contactors and Overload Relays Rated 600 Volts; 2000 (R2005), with errata, 2008.

G. NEMA MG 1 - Motors and Generators; 2014.

H. UL (DIR) - Online Certifications Directory; current listings at database.ul.com.

I. UL 325 - Standard for Door, Drapery, Gate, Louver, and Window Operators and Systems; Current Edition, Including All Revisions.

1.04 SUBMITTALS

A. Product Data: Provide general construction, component connections and details, and electrical equipment.

B. Shop Drawings: Indicate pertinent dimensioning, anchorage methods, hardware locations, and installation details.

C. Manufacturer's Installation Instructions: Indicate installation sequence and procedures, adjustment and alignment procedures.

D. Maintenance Data: Indicate lubrication requirements and frequency; periodic adjustments required; and other pertinent data.

1.05 QUALITY ASSURANCE

A. Provide certificate of compliance from authorities having jurisdiction indicating approval of grille and operating hardware assembly.

B. Products Requiring Electrical Connection: Listed and classified by Underwriters Laboratories Inc. or testing firm acceptable to the authority having jurisdiction, as suitable for the purpose specified and indicated.

PART 2 PRODUCTS

2.01 MANUFACTURERS

A. Overhead Coiling Grilles:
   1. Cornell Iron Works, Inc, (www.cornelliron.com) Visionaire ESG10 is the Basis of Design.
   2. Other Approved Manufacturers:
      a. Alpine Overhead Doors, Inc: www.alpinedoors.com.
      b. Cornell Iron Works, Inc: www.cornelliron.com.
      c. The Cookson Company: www.cooksondoor.com.
      d. Wayne-Dalton, a Division of Overhead Door Corporation: www.waynedalton.com.

2.02 GRILLE AND COMPONENTS

A. Grille: Aluminum; horizontal bar curtain, coiling on overhead counterbalanced shaft.
   1. Finish: Anodized, color as selected by Architect.
   2. Lock Devices: Lock and latch handle on outside.
   3. Electric operation.
   4. Mounting: Within framed opening and as indicated.

B. Curtain: Round horizontal bars connected with vertical links.
   1. Horizontal bars: 5/16 inch diameter.
   2. Bar spacing: 1 1/2 inch on center.
   3. Tube spacers: 1/2 inch diameter.
   4. Spacer spacing: 3 1/4 inch on center.
   5. Vertical links: 5/16 inch diameter.
   6. Link spacing: 9 inch on center.
   7. Bar Ends: Provide with nylon or wood pile runners for quiet operation.
   8. Bottom Bar: Back-to-back angles with tubular resilient cushion.

C. Guides: Extruded aluminum angles, of profile to retain grille in place with snap-on trim, mounting brackets of same metal.

D. Lock Hardware:
   1. Cylindrical Locking Mechanism: Latchset lock cylinder, specified in Section 08 7100.
   2. For motor operated units, additional lock or latching mechanisms are not required.
   3. Latching Mechanism: Inside mounted, adjustable keeper, spring activated latch bar feature to keep in locked or retracted position.
   4. Latch Handle: Manufacturer's standard.

E. Roller Shaft Counterbalance: Steel pipe and helical steel spring system, capable of producing torque sufficient to ensure smooth operation of curtain from any position and capable of holding position at mid-travel; with adjustable spring tension; requiring 25 lb (10 kg) nominal force to operate.

2.03 MATERIALS

A. Aluminum: ASTM B221 (ASTM B221M).

2.04 ELECTRIC OPERATION

A. Operator, Controls, Actuators, and Safeties: Comply with UL 325; provide products listed by ITS (DIR), UL (DIR), or testing agency acceptable to authorities having jurisdiction.
   1. Provide interlock switches on motor operated units.

B. Electric Operators:

1. Mounting: Side mounted.
2. Motor Rating: 1/2 hp; continuous duty.
3. Motor Voltage: 120 volt, single phase, 60 Hz.
4. Motor Controller: NEMA ICS 2, full voltage, reversing magnetic motor starter.
5. Controller Enclosure: NEMA 250 Type 1.
6. Opening Speed: 12 inches per second.
7. Brake: Adjustable friction clutch type, activated by motor controller.
8. Manual override in case of power failure.

C. Control Station: Standard three button (OPEN-STOP-CLOSE) momentary control for each operator.
1. 24 volt circuit.
2. Recessed.

D. Safety Edge: Located at bottom of curtain, full width, electro-mechanical or pneumatic sensitized type, wired to stop or reverse operator upon striking object, hollow neoprene or rubber covered.

PART 3 EXECUTION

3.01 EXAMINATION

A. Verify that opening sizes, tolerances and conditions are acceptable.

3.02 INSTALLATION

A. Install grille unit assembly in accordance with manufacturer's instructions.

B. Use anchorage devices to securely fasten assembly to wall construction and building framing without distortion or stress.

C. Securely and rigidly brace components suspended from structure. Secure guides to structural members only.

D. Fit and align assembly including hardware; level and plumb, to provide smooth operation.

E. Coordinate installation of electrical service with Section 26 0583.

F. Complete wiring from disconnect to unit components.

G. Install perimeter trim, closures and other standard accessories.

3.03 TOLERANCES

A. Maintain dimensional tolerances and alignment with adjacent work.

B. Maximum Variation From Plumb: 1/16 inch.

C. Maximum Variation From Level: 1/16 inch.

D. Longitudinal or Diagonal Warp: Plus or minus 1/8 inch per 10 ft straight edge.

3.04 ADJUSTING

A. Adjust grille, hardware and operating assemblies for smooth and noiseless operation.

3.05 CLEANING

A. Clean grille and components.

B. Remove labels and visible markings.

END OF SECTION

SECTION 08 3473
ACOUSTICAL DOORS AND FRAMES

PART 1 GENERAL

1.01 SECTION INCLUDES

A. Acoustical metal swinging doors, frames, hinges and seals

1.02 RELATED REQUIREMENTS

A. Section 08 1113 - Hollow Metal Doors and Frames

B. Section 08 7100 - Door Hardware: Other door hardware.

C. Section 08 8000 - Glazing: Glass for doors and borrowed lites.

1.03 SYSTEM DESCRIPTION

A. Design Requirements:
1. Manufacturer is responsible for designing unit, including anchorage to structural system and necessary modifications to meet specified requirements and maintain visual design concepts.
2. Drawings are diagrammatic and are intended to establish basic dimension of units, sight lines, and profiles of units.
3. Provide concealed fastening wherever possible.
4. Account for site peculiarities and expansion and contraction movements of attachments to avoid possibility of loosening, weakening or fracturing connection between units and substrate.

B. Design:
1. Provide acoustical door system complete with frame, hinges, and gaskets.
2. Prepare complete engineering design in accordance with dimensions and arrangements shown on drawings.

C. Acoustical Performance.
1. Minimum Sound Transmission Class (STC) rating of 50.
2. The sound transmission loss of the door assembly shall be certified by a test report from an independent acoustical testing laboratory. The test method shall meet ASTM E90 for the laboratory measurement of airborne sound transmission loss.
3. The door shall be fully operable at the time of test and shall be opened and closed several times prior to measurement. The test shall be on the exact door/frame/seal assembly that is to be supplied for the project. It shall be tested as a complete assembly. A test for the door and a separate test for the acoustical seals is not acceptable.
4. The door and frame assembly shall meet or exceed the stated STC values and in addition shall meet or exceed the corresponding sound transmission loss values as follows: Minimum Laboratory Transmission Loss (TL) values per octave band (arithmetic average of 1/3 octave band TLs):
   a. 125 Hz: 30 dB
   b. 250 Hz: 40 dB
   c. 500 Hz: 47 dB
   d. 1 kHz: 50 dB
   e. 2 kHz: 54 dB
   f. 4 kHz: 56 dB
5. Minimum Field Acoustical Performance: ASTC 45.

D. Fire Resistance Requirements:

1. Provide assemblies which comply with NFPA 80 and have been tested, rated and labeled in accordance with NFPA 252 or UL 10B.
2. Identify each assembly with factory applied label indicating applicable fire rating.

1.04 SUBMITTALS

A. See Section 01 3000 - Administrative Requirements, for submittal procedures.

B. Product Data:
1. Submit product data for sound rated doors and frames.
2. Include information for factory finishes, hardware, glass, sealants, accessories and other required components.
3. Acoustical test reports from an independent acoustical testing laboratory including installation instructions. The acoustical testing laboratory shall have been accredited by the U.S. Department of Commerce, National Bureau of Standards under the National Voluntary Laboratory Accreditation Program (NVLAP) for this test procedure.
4. Manufacturer's detailed specifications.
5. Include color charts for finish indicating manufacturer’s standard colors available for selection.

C. Shop Drawings:
1. Submit shop drawings covering fabrication, installation and finish of specified systems.
2. Include following:
   a. Fully dimensioned plans and elevations with detail coordination keys.
   b. Locations of exposed fasteners and joints.
   c. Door, frames, head and jamb seals and automatic door bottom construction.
   d. Show frame and door sizes and types as scheduled and detailed.

D. Submit following Informational Submittals:
1. Test Reports: Written results of tests confirming System Description Article.
2. Submit field tests performed by independent Acoustical Consultant on at least two previously installed acoustical doors. Basic construction, including frame and seals shall be identical to doors specified and shall be fully described in the test reports. Doors shall provide a minimum Noise Isolation Class (NIC) of 50 or greater.
3. Certifications specified in Quality Assurance article.
4. Qualification Data:
   a. Manufacturer’s and installer’s qualifications verifying years of experience.
   b. Include list of completed projects having similar scope of Work identified by name, location, date, reference names, and phone numbers.
5. Manufacturer’s Instructions:
   a. Manufacturer’s printed installation instructions.
   b. Manufacturer's written instructions for adjusting sound seals.
   c. Indicate by transmittal that copies of instructions and recommendations have been distributed to installer.

E. Closeout Submittals
1. Operation and Maintenance Data: Submit manufacturer’s printed, recommended maintenance data.

1.05 QUALITY ASSURANCE

A. Single Source Responsibility: To ensure quality of appearance and performance, obtain materials for systems from either a single manufacturer or from manufacturer approved by systems manufacturer.

1. Doors, frames, hinges and seals shall be supplied by the acoustical door manufacturer.
2. All acoustical doors for the project shall be the product(s) of one manufacturer.

B. Manufacturer Qualifications: Manufactured acoustical doors, frames and hardware of type required for this project for minimum of 5 years.

C. Installer Qualifications: Certified in writing by system manufacturer as qualified for installation of specified systems.

D. Regulatory Requirements: Ensure fire-rated acoustical doors, frames, and hardware components comply with applicable portions of local, state, and federal codes, laws, and ordinances.

E. Acoustical Performance: Sound retardant door acoustical performance criteria shall be determined according to the following requirements:
1. Laboratory acoustical tests shall be performed in accordance with ASTM E 90 of recent date by an independent National Voluntary Laboratory Accreditation Program (NVLAP) approved testing laboratory.
2. Field acoustical tests shall have been conducted on doors and in spaces whose sizes are as similar as possible to conditions on this Project. Field tests shall have been conducted on 2 recent, completed projects. Field tests shall have been performed in accordance with recent editions of ASTM E 336 and E 413. Receiving room sound measurements shall have been made within 3 to 6 feet of door panels.

F. Certifications:
1. Submit manufacturer's certification that products furnished for Project meet or exceed specified requirements.
2. Engineering certifications.

1.06 PRE-INSTALLATION CONFERENCE

A. Conduct pre-installation conference.

B. Review requirements of Contract Documents and submittals.

C. Review requirements for inspection and testing, project requirements, and proposed installation procedures and sequencing.

D. Review anchor and substrate requirements.

1.07 DELIVERY, STORAGE, AND HANDLING

A. Protect finished surfaces as necessary to prevent damage.

B. Do not use adhesive papers or sprayed coatings which become firmly bonded when exposed to sun.

C. Do not leave coating residue on any surfaces.

D. Replace damaged units.

1.08 PROJECT CONDITIONS

A. Field Measurements: Check actual door openings by accurate field measurements before fabricating doors. Show resulting measurements on final shop drawings. Coordinate fabrication schedule with construction progress to avoid delay in installation. Coordinate fabrication tolerances to ensure proper fit of any glazing.
1. Discrepancies: Note all discrepancies in surrounding construction which are likely to affect the operational, structural, or acoustical performance of the operable partitions. Provide a list of such discrepancies to the Architect.

B. Environmental Requirements: Comply with manufacturer's written requirements for ambient and surface temperatures under which products can be installed and verify joint conditions are suitable for installation of materials.

1.09 WARRANTY

A. Manufacturer's Warranty: Submit written agreement on door manufacturer's standard form signed by the manufacturer, installer, and Contractor, agreeing to repair or replace defective doors which fail in materials or workmanship within the specified warranty period. Failures include but are not limited to:
   1. Structural integrity.
   2. Acoustical performance criteria.

B. Scope and Coverage: The warranty shall include reinstallation which may be required due to repair or replacement of defective doors where defect was not apparent prior to hanging.
   1. Include coverage for acoustical doors, frames, and hardware.

C. Warranty Period: 2 years after the date of Substantial Completion.

PART 2 PRODUCTS

2.01 MANUFACTURERS

A. Oversized Acoustical Metal Door Assembly Manufacturers:
   1. Industrial Acoustics Company, Bronx, NY 718-931-8000 www.industrialacoustics.com/usa/doors_windows_partitions/index.asp
   2. Jamison Door Company, Hagerstown, MD 301-733-3100 www.jamisondoor.com/doorssound.asp
   3. Noise Barriers, LLC, Schaumburg, IL (847) 843-0500 www.noisebarriers.com/doors/
   4. Protective Door Industries, Harvey IL 708-331-2515 www.protectivedoor.com
   5. Krieger Steel Products Company 1-800-251-3396 https://www.kriegerproducts.com/
   6. Overly Manufacturing Company 1-800-979-7300 www.door.overly.com
   7. Substitutions: See Section 01 6000 - Product Requirements.

2.02 FRAME CONSTRUCTION

A. Frames shall be commercial grade cold-rolled steel or channels, as shown on the drawings, conforming to ASTM A366-79. Metal thickness shall not be less than 14 gauge for frames in openings over 4’-0”.

B. Frame shall be custom made welded and bolted unit with a field splice for shipping, with integral trim, of the size and shape shown on approved shop drawings.

C. All finished work shall be strong and rigid, neat in appearance, square, true and free of defects, warp or buckle. Molded members shall be clean cut, straight and of uniform profile throughout their lengths.

D. Jamb depths, trim, profile and backbends shall be as shown on drawings.

E. Corner joints shall have all contact edges closed tight, with trim faces mitered and continuously welded. The use of gussets will not be permitted.

F. Minimum depth of stops shall be 7/8”.

G. Head, jamb, and floor anchors: See Section 08 1113 for requirements.

H. Oversized Doors (doors greater than 8'-0" high):
   1. All mounting and framing for oversized doors shall be reviewed by the Structural Engineer to insure proper wall support and integrity.
   2. Floor Anchors:

a. Floor anchors shall be securely welded inside each jamb.
b. Minimum thickness of floor anchors shall be 3/16".

3. Jamb and head anchors:
   a. Frame shall be provided with 1-1/2" x 3/16" x 8" long steel plates with dove-tail ends, 16" o.c., 8" from top and bottom of frame for securing back into the block wall. If required, frame shall have two 1/4" x 2" steel diagonal braces between each hinge and frame. The brace shall be welded to 1/2" steel tapping and 3/8" backup hinge tapping plates.

I. Dust cover boxes (or mortar guards) of not thinner than 26 gauge steel shall be provided at all hardware mortises on frames.

2.03 FRAME FINISH:

A. After fabrication, remove all tool marks and surface imperfections. Dress smooth all exposed faces of all welded joints. Chemically treat frames to insure maximum paint adhesion and coat all accessible surfaces with one coat of rust-inhibitive primer.

2.04 DOOR CONSTRUCTION:

A. Door shall be made of commercial quality, level, cold-rolled steel conforming to ASTM A366-79 and free of scale, pitting or other surface defects. Face sheets shall not be less than 16 gauge.

B. Door thickness shall be as called out in shop drawings according to acoustical test model, custom made, of the type and size as shown on the approved shop drawings and shall be fully welded seamless construction with no visible seams or joints on their faces or vertical edges.

C. Door shall be strong, rigid and neat in appearance, free from warpage or buckle. Corner beads shall be true and straight and of minimum radius for the gauge of metal used.

D. Stiffen face sheets and fill the void between faces filled with sound-deadening material in accordance with the acoustical laboratory tested door to achieve the STC rating.

E. Join door faces at their vertical edges by a continuous weld extending the full height of the door. Grind, fill and dress smooth welds to make them invisible and to provide a smooth flush surface.

F. Close top and bottom edges of all doors with a continuous recessed steel channel not less than 16 gauge, extending the full width of the door and spot welded to both faces.

G. Hardware reinforcements:
   1. Mortise, reinforce, drill and tap doors at the factory for fully mortised hardware only. Where surface-mounted hardware is to be applied, frames shall have reinforcing plates.
   2. Minimum thickness of hardware reinforcing plates shall be as follows:
      a. Hinge and pivot reinforcements - 7 gauge.
      b. Reinforcement for lock face, flush bolts, concealed holders, concealed or surface mounted closers - 12 gauge.
      c. Reinforcements for all other surface-mounted hardware - 16 gauge.
   3. Coordinate with other hardware as scheduled in Section 08 7100: Door Hardware.

H. Jamb and Head Seals: Hinge, lock and head sides of the door shall close against positive neoprene compression and/or magnetic seals that are mounted in the frame and/or leaf.

I. Door Bottom Seal: Concealed neoprene drop seal, adjustable or automatic to conform to sill conditions, mortised or semi-mortised within the door. Surface mounted drop seals are unacceptable.

J. Astragal Seal: The astragal shall be rabbeted and contain the same seal material as used around the perimeter of the door. There shall be continuous pressure applied to the astragal by the use of interconnected, multiple and adjustable latching points. This multi-point latching system shall fasten both leaves to each other and to the frame at top and floor at bottom. This system shall compress the seals and prevent the two leafs from bowing out and disengaging the astragal seals. This seal shall not degrade the acoustical performance of the door.

K. Threshold: Flush steel plate sealed to floor or floor itself, level to within smallest possible tolerance.

L. Other Hardware: See Section 08 7100: Door Hardware for other hardware scheduled for door opening.

M. Door shall be lockable from one or both sides of the door. Coordinate with Architect per manufacturer's recommendations.

2.05 DOOR FINISH:

A. After fabrication, remove all tool marks and surface imperfections. Dress smooth all exposed faces of all welded joints. Chemically treat frames to insure maximum paint adhesion and coat all surfaces with one coat of rust-inhibiting primer.

2.06 FLATNESS:

A. Maintain a flatness tolerance of 1/16" maximum in any 8' horizontal or vertical direction, 1/8" across the diagonal.

2.07 HARDWARE:

A. All door hardware shall be supplied by the door manufacturer.

PART 3 EXECUTION

3.01 INSTALLATION OF ACOUSTICAL DOORS AND FRAMES

A. General:
   1. Supervise installation of all oversized acoustical doors and frames by factory trained personnel or manufacturer's representatives in accordance with all local labor regulations.
   2. Install all acoustical doors and accessories in accordance with final shop drawings, manufacturer's recommendations and as herein specified.

B. Placing Frames:
   1. Comply with provisions of SDI-105 "Recommended Erection Instructions for Steel Frames", unless otherwise indicated.
   2. Place all frames for acoustical doors after all walls are set and in place. Set frames accurately in position, plumbed, aligned and braced securely until permanent anchors are set.
   3. In masonry construction, locate a minimum of three (3) wall anchors per jamb at hinge and strike levels.
   4. Grouting of frames, complete with any reinforcement and installation of insulation in the frame, shall be performed by the installing contractor as part of his work to insure the acoustical and structural integrity of the assembly.
   5. Install fire-rated frames in accordance with NFPA 80.
   6. Remove spreader bars only after frames have been properly set and secured.
   7. All frames designated for oversized acoustic doors shall be inspected after frame installation is complete. Frame inspection shall be by factory-trained and approved representatives or contractors for oversized acoustic doors. Acoustic door manufacturer

representative or contractor shall notify the architect concerning improper installation of door frames.

C. Door Installation:
   1. Fit acoustical doors accurately in frames, within clearances specified in SDI-100 and as herein specified.
   2. Doors must be installed plumb and aligned.
   3. Place fire-rated doors with clearances as specified in NFPA 80.
   4. Adjust all automatic or adjustable acoustical perimeter and drop seals to insure a tight fit per manufacturer's recommendations.

3.02 ADJUST AND CLEAN

A. Prime Coat Touch-Up: Immediately after erection, sand smooth any rusted or damaged areas of prime coat and apply touch-up of compatible air-drying primer.

B. Final Adjustments: Check and readjust operating finish hardware items and acoustical seals, leaving steel doors and frames undamaged and in complete and proper operating condition. Check for any air, light (and sound) gaps at door jambs, head and sill and adjust seals as necessary.

3.03 FIELD TESTING VERIFICATION

A. The owner will retain the services of an independent acoustical consultant to conduct field sound transmission tests at any designated door locations where acoustical performance is suspected by the architect of not being in compliance with these specifications. The tests shall be conducted in accordance with ASTM E-336 to determine the Field Sound Transmission Class (FSTC) or Noise Isolation Class (NIC), as applicable and feasible. If such results indicate acoustical performance more than 5 points less than the specified STC ratings, it shall be the responsibility of the manufacturer and contractor, at their expense, to correct such deficiencies by methods approved by the architect prior to incorporation. Sound transmission tests shall be repeated and corrective measures implemented until the established performance requirements are met. All costs for retesting, shall be borne by the contractor and manufacturer.

END OF SECTION

SECTION 08 4313
ALUMINUM-FRAMED STOREFRONTS

PART 1 GENERAL

1.01 SECTION INCLUDES

A. Aluminum-framed storefront, with vision glass.

B. Infill panels of metal and glass.

C. Aluminum doors and frames.

D. Weatherstripping.

1.02 RELATED REQUIREMENTS

A. Section 07 9200 - Joint Sealants: Sealing joints between frames and adjacent construction.

B. Section 08 7100 - Door Hardware: Hardware items other than specified in this section.

C. Section 08 8000 - Glazing: Glass and glazing accessories.

1.03 REFERENCE STANDARDS

A. AAMA CW-10 - Care and Handling of Architectural Aluminum From Shop to Site; 2015.

B. AAMA 609 & 610 - Cleaning and Maintenance Guide for Architecturally Finished Aluminum (Combined Document); 2015.

C. AAMA 1503 - Voluntary Test Method for Thermal Transmittance and Condensation Resistance of Windows, Doors and Glazed Wall Sections; 2009.

D. AAMA 2605 - Voluntary Specification, Performance Requirements and Test Procedures for Superior Performing Organic Coatings on Aluminum Extrusions and Panels (with Coil Coating Appendix); 2013.

E. ASCE 7 - Minimum Design Loads for Buildings and Other Structures; 2010, with 2013 Supplements and Errata.

F. ASTM B221 - Standard Specification for Aluminum and Aluminum-Alloy Extruded Bars, Rods, Wire, Profiles, and Tubes; 2014.

G. ASTM B221M - Standard Specification for Aluminum and Aluminum-Alloy Extruded Bars, Rods, Wire, Profiles, and Tubes (Metric); 2013.

H. ASTM E283 - Standard Test Method for Determining the Rate of Air Leakage Through Exterior Windows, Curtain Walls, and Doors Under Specified Pressure Differences Across the Specimen; 2004 (Reapproved 2012).

I. ASTM E330/E330M - Standard Test Method for Structural Performance of Exterior Windows, Doors, Skylights and Curtain Walls by Uniform Static Air Pressure Difference; 2014.

J. ASTM E331 - Standard Test Method for Water Penetration of Exterior Windows, Skylights, Doors, and Curtain Walls by Uniform Static Air Pressure Difference; 2000 (Reapproved 2016).

1.04 ADMINISTRATIVE REQUIREMENTS

A. Coordinate with installation of other components that comprise the exterior enclosure.

B. Preinstallation Meeting: Conduct a preinstallation meeting one week before starting work of this section; require attendance by all affected installers.

1.05 SUBMITTALS

A. See Section 01 3000 - Administrative Requirements, for submittal procedures.

B. Product Data: Provide component dimensions, describe components within assembly, anchorage and fasteners, glass and infill, internal drainage details.

C. Shop Drawings: Indicate system dimensions, framed opening requirements and tolerances, affected related Work, expansion and contraction joint location and details, and field welding required.

D. Samples: Submit two samples 12 by 12 inches in size illustrating finished aluminum surface, glass, infill panels, glazing materials.

E. Manufacturer's Certificate: Certify that the products supplied meet or exceed the specified requirements.

F. Warranty: Submit manufacturer warranty and ensure forms have been completed in Owner's name and registered with manufacturer.

1.06 QUALITY ASSURANCE

A. Manufacturer Qualifications: Company specializing in performing work of type specified and with at least three years of documented experience.

B. Installer Qualifications: Company specializing in performing work of type specified and with at least three years of documented experience.

1.07 DELIVERY, STORAGE, AND HANDLING

A. Handle products of this section in accordance with AAMA CW-10.

B. Protect finished aluminum surfaces with wrapping. Do not use adhesive papers or sprayed coatings that bond to aluminum when exposed to sunlight or weather.

1.08 FIELD CONDITIONS

A. Do not install sealants when ambient temperature is less than 40 degrees F. Maintain this minimum temperature during and 48 hours after installation.

1.09 WARRANTY

A. Correct defective Work within a one year period after Date of Substantial Completion.

B. Provide five year manufacturer warranty against failure of glass seal on insulating glass units, including interpane dusting or misting. Include provision for replacement of failed units.

C. Provide twenty year manufacturer warranty against excessive degradation of exterior finish. Include provision for replacement of units with excessive fading, chalking, or flaking.

PART 2 PRODUCTS

2.01 BASIS OF DESIGN -- FRAMING FOR INSULATING GLAZING

A. Locations: All storefront locations in exterior building envelope and where 1" insulating glass is scheduled.

B. Manufacturer and Product: Kawneer Trifab 451UT Storefront System: www.kawneer.com.

C. Storefront Framing System:

1. Description: Center set, exterior flush glazed; jambs and vertical mullions continuous; head, sill, intermediate horizontal attached by screw spline joinery.
2. Components: Manufacturer's standard extruded aluminum mullions, 90 degree corner posts, entrance door framing, and indicated shapes.
3. Dual Thermal Barrier: Provide dual continuous thermal barriers by means of poured and debridged pockets consisting of a two-part, chemically curing high density polyurethane which is bonded to the aluminum.
4. Vertical Mullion Dimensions: 2 inches wide by 4-1/2 inches deep.

D. Other Manufacturers: Provide either the product identified as "Basis of Design" or an equivalent product of another manufacturer with approved submittal meeting the design criteria..
   1. YKK AP America Inc: www.ykkap.com.
   2. Oldcastle Building Envelope: www.obe.com.

E. Substitutions: See Section 01 6000 - Product Requirements.
   1. For any product not identified as "Basis of Design", submit information as specified for substitutions.

2.02 BASIS OF DESIGN -- FRAMING FOR NON-INSULATING GLAZING

A. Locations: Interior locations where single pane glass is scheduled.

B. Manufacturer and Product: Kawneer Trifab 451 Storefront System: www.kawneer.com.

C. Storefront Framing System:
   1. Description: Center set, flush glazed; jambs and vertical mullions continuous; head, sill, intermediate horizontal attached by screw spline joinery.
   2. Components: Manufacturer's standard extruded aluminum mullions, 90 degree corner posts, entrance door framing, glazing adapters, and indicated shapes.
   3. Vertical Mullion Dimensions: 2 inches wide by 4-1/2 inches deep.

D. Other Manufacturers: Provide either the product identified as "Basis of Design" or an equivalent product of another manufacturer with approved submittal meeting the design criteria..
   1. YKK AP America Inc: www.ykkap.com.
   2. Oldcastle Building Envelope: www.obe.com.

E. Substitutions: See Section 01 6000 - Product Requirements.
   1. For any product not identified as "Basis of Design", submit information as specified for substitutions.

2.03 BASIS OF DESIGN -- SWINGING DOORS

A. Wide Stile, Insulating Glazing, Not Thermally-Broken:
   1. Basis of Design: Kawneer 500 Heavy Wall Entrances: www.kawneer.com.
   2. Thickness: 2 inches.
   3. Wall thickness: 3/16 inches.

B. Other Manufacturers: Provide either the product identified as "Basis of Design" or an equivalent product of another manufacturer with approved submittal meeting the design criteria..
   1. YKK AP America Inc: www.ykkap.com.
   2. Oldcastle Building Envelope: www.obe.com.

C. Substitutions: See Section 01 6000 - Product Requirements.

2.04 STOREFRONT

A. Aluminum-Framed Storefront: Factory fabricated, factory finished aluminum framing members with infill, and related flashings, anchorage and attachment devices.
   1. Finish: Superior performing organic coatings.
      a. Factory finish all surfaces that will be exposed in completed assemblies.
      b. Touch-up surfaces cut during fabrication so that no natural aluminum is visible in completed assemblies, including joint edges.

c. Coat concealed metal surfaces that will be in contact with cementitious materials or dissimilar metals with bituminous paint.

2. Finish Color: As selected by Architect from manufacturer's standard line.
3. Fabrication: Joints and corners flush, hairline, and weatherproof, accurately fitted and secured; prepared to receive anchors and hardware; fasteners and attachments concealed from view; reinforced as required for imposed loads.
4. Construction: Eliminate noises caused by wind and thermal movement, prevent vibration harmonics, and prevent "stack effect" in internal spaces.
5. System Internal Drainage: Drain to the exterior by means of a weep drainage network any water entering joints, condensation occurring in glazing channel, and migrating moisture occurring within system.
6. Expansion/Contraction: Provide for expansion and contraction within system components caused by cycling temperature range of 170 degrees F over a 12 hour period without causing detrimental effect to system components, anchorages, and other building elements.
7. Movement: Allow for movement between storefront and adjacent construction, without damage to components or deterioration of seals.
8. Perimeter Clearance: Minimize space between framing members and adjacent construction while allowing expected movement.
9. Air and Vapor Seal: Maintain continuous air barrier and vapor retarder throughout assembly, primarily in line with inside pane of glazing and inner sheet of infill panel and heel bead of glazing compound.

B. Performance Requirements for Thermally-Broken Storefront System:
1. Wind Loads: Design and size components to withstand the specified load requirements without damage or permanent set, when tested in accordance with ASTM E330/E330M, using loads 1.5 times the design wind loads and 10 second duration of maximum load.
   a. Design Wind Loads: Comply with requirements of ASCE 7.
   b. See structural drawings for lateral load design factors.
   c. Member Deflection: Limit member deflection to flexure limit of glass in any direction, with full recovery of glazing materials.
2. Water Penetration Resistance: No uncontrolled water on interior face, when tested in accordance with ASTM E331 at pressure differential of 10 psf. Fastener Heads must be seated and sealed against sill flashing or any fasteners that penetrate through the sill flashing.
3. Air Leakage: Maximum of 0.06 cu ft/min sq ft of wall area, when tested in accordance with ASTM E283 at 6.27 psf pressure differential across assembly.
4. Condensation Resistance Factor of Framing: 66, minimum, measured in accordance with AAMA 1503.
5. Overall U-value Including Low-E Glazing: 0.36 Btu/(hr sq ft deg F), maximum.

2.05 COMPONENTS

A. Aluminum Framing Members: Tubular aluminum sections, thermally broken with interior section insulated from exterior, drainage holes and internal weep drainage system.
1. Framing members for interior applications need not be thermally broken.
2. Glazing Stops: Flush.

B. Glazing: As specified in Section 08 8000.

C. Infill Panels: Insulated, aluminum sheet face and back, with edges formed to fit glazing channel and sealed.

1. Substrate: high density tempered hardboard and impact resistant layer
2. Core: Rigid polyisocyanurate insulation.
3. Interior and Exterior Finish: Superior performance organic coating, custom color to match Architect's sample.
4. Manufacturers: Mapes Industries, Inc.

D. Swing Doors: Glazed aluminum.
1. Thickness: 2 inches.
2. Top Rail: 5 inches wide.
3. Vertical Stiles: 5 inches wide.
4. Bottom Rail: 10 inches wide.
5. Glazing Stops: Square.
6. Finish: Same as storefront.

E. Aluminum Panning: Extruded aluminum to match Traco wrap around profile “N” at head/jamb. Finish to match storefront. See Section 08 5113 - Aluminum Windows.

2.06 MATERIALS

A. Extruded Aluminum: ASTM B221 (ASTM B221M).

B. Fasteners: Stainless steel.

C. Glazing Gaskets: Type to suit application to achieve weather, moisture, and air infiltration requirements.

2.07 FINISHES

A. Superior Performing Organic Coatings: AAMA 2605 multiple coat, thermally cured polyvinylidene fluoride (PVDF) system.
1. Polyvinylidene fluoride (PVDF) multi-coat thermoplastic fluoropolymer coating system, including minimum 70 percent PVDF color topcoat and minimum total dry film thickness of 0.9 mil; color and gloss as selected from manufacturer’s standard line.

2.08 HARDWARE

A. Other Door Hardware: As specified in Section 08 7100.

B. Weatherstripping: Wool pile, continuous and replaceable; provide on all doors.

C. Sill Sweep Strips: Resilient seal type, retracting, of neoprene; provide on all doors.

PART 3 EXECUTION

3.01 EXAMINATION

A. Verify dimensions, tolerances, and method of attachment with other work.

B. Verify that wall openings and adjoining air and vapor seal materials are ready to receive work of this section.

3.02 INSTALLATION

A. Install wall system in accordance with manufacturer's instructions.

B. Attach to structure to permit sufficient adjustment to accommodate construction tolerances and other irregularities.

C. Provide alignment attachments and shims to permanently fasten system to building structure.

D. Align assembly plumb and level, free of warp or twist. Maintain assembly dimensional tolerances, aligning with adjacent work.

E. Provide thermal isolation where components penetrate or disrupt building insulation.

F. Install sill flashings. Extend extruded flashing continuous with splice joints; set in continuous bed of sealant. Turn up ends and edges; seal to adjacent work to form water tight dam.

G. Where fasteners penetrate sill flashings, make watertight by seating and sealing fastener heads to sill flashing.

H. Locate expansion mullions where indicated on reviewed shop drawings.

I. Pack fibrous insulation in shim spaces at perimeter of assembly to maintain continuity of thermal barrier.

J. Touch-up minor damage to factory applied finish; replace components that cannot be satisfactorily repaired.

3.03 TOLERANCES

A. Maximum Variation from Plumb: 0.06 inches every 3 ft non-cumulative or 1/16 inches per 10 ft, whichever is less.

B. Maximum Misalignment of Two Adjoining Members Abutting in Plane: 1/32 inch.

3.04 ADJUSTING

A. Adjust operating hardware and sash for smooth operation.

3.05 CLEANING

A. Remove protective material from pre-finished aluminum surfaces.

B. Wash down surfaces with a solution of mild detergent in warm water, applied with soft, clean wiping cloths. Take care to remove dirt from corners. Wipe surfaces clean.

C. Upon completion of installation, thoroughly clean aluminum surfaces in accordance with AAMA 609 & 610.

3.06 PROTECTION

A. Protect installed products from damage until Date of Substantial Completion.

END OF SECTION

SECTION 08 4413
GLAZED ALUMINUM CURTAIN WALLS

PART 1 GENERAL

1.01 SECTION INCLUDES

A. Aluminum-framed curtain wall, with vision glazing and glass and metal infill panels.

B. Column covers.

1.02 RELATED REQUIREMENTS

A. Section 07 2500 - Weather Barriers: Sealing framing to weather barrier installed on adjacent construction.

B. Section 07 9200 - Joint Sealants: Sealing joints between frames and adjacent construction.

C. Section 08 8000 - Glazing.

D. Section 09 2116 - Gypsum Board Assemblies: Metal stud and gypsum board wall at interior of curtain wall.

1.03 REFERENCE STANDARDS

A. AAMA CW-10 - Care and Handling of Architectural Aluminum From Shop to Site; 2015.

B. AAMA 501.4 - Recommended Static Test Method for Evaluating Curtain Wall and Storefront Systems Subjected to Seismic and Wind Induced Interstory Drifts; 2009.

C. AAMA 609 & 610 - Cleaning and Maintenance Guide for Architecturally Finished Aluminum (Combined Document); 2015.

D. AAMA 1503 - Voluntary Test Method for Thermal Transmittance and Condensation Resistance of Windows, Doors and Glazed Wall Sections; 2009.

E. AAMA 2605 - Voluntary Specification, Performance Requirements and Test Procedures for Superior Performing Organic Coatings on Aluminum Extrusions and Panels (with Coil Coating Appendix); 2013.

F. ASCE 7 - Minimum Design Loads for Buildings and Other Structures; 2010, with 2013 Supplements and Errata.

G. ASTM B209 - Standard Specification for Aluminum and Aluminum-Alloy Sheet and Plate; 2014.

H. ASTM B221 - Standard Specification for Aluminum and Aluminum-Alloy Extruded Bars, Rods, Wire, Profiles, and Tubes; 2014.

I. ASTM E283 - Standard Test Method for Determining the Rate of Air Leakage Through Exterior Windows, Curtain Walls, and Doors Under Specified Pressure Differences Across the Specimen; 2004 (Reapproved 2012).

J. ASTM E331 - Standard Test Method for Water Penetration of Exterior Windows, Skylights, Doors, and Curtain Walls by Uniform Static Air Pressure Difference; 2000 (Reapproved 2016).

K. ASTM E1105 - Standard Test Method for Field Determination of Water Penetration of Installed Exterior Windows, Skylights, Doors, and Curtain Walls, by Uniform or Cyclic Static Air Pressure Difference; 2015.

1.04 ADMINISTRATIVE REQUIREMENTS

A. Coordinate with installation of other components that comprise the exterior enclosure.

B. Preinstallation Meeting: Conduct a preinstallation meeting one week before starting work of this section; require attendance by all affected installers.

1.05 SUBMITTALS

A. See Section 01 3000 - Administrative Requirements, for submittal procedures.

B. Product Data: Provide component dimensions, describe components within assembly, anchorage and fasteners, internal drainage details, glazing, and infill.

C. Shop Drawings: Indicate system dimensions, framed opening requirements and tolerances, affected related Work, expansion and contraction joint location and details, and field welding required.

D. Samples: Submit two samples 12 by 12 inches in size illustrating finished aluminum surface, glazing,infill panels, and glazing materials.

E. Manufacturer's Certificate: Certify that the products supplied meet or exceed the specified requirements.

F. Test Reports: Submit results of full-size mock-up testing. Reports of tests previously performed on the same design are acceptable.

G. Field Quality Control Submittals: Report of field testing for water leakage.

H. Warranty: Submit manufacturer warranty and ensure forms have been completed in Owner's name and registered with manufacturer.

1.06 QUALITY ASSURANCE

A. Designer Qualifications: Design structural support framing components under direct supervision of a Professional Structural Engineer experienced in design of this Work and licensed in the State of Delaware.

B. Full-Size Mock-up Testing: Have a specimen representative of project conditions testedby an independent testing agency for compliance with specified water penetration and water penetration criteria.

C. Manufacturer Qualifications: Company specializing in manufacturing products specified in this section with not less than three years of documented experience.

1.07 MOCK-UP

A. See Section 01 4000 - Quality Requirements, for general requirements for mock-ups.

B. Provide one (1) full-size Window Type CW3 mock-up including all components occurring on project. Assemble to illustrate component assembly including glazing materials, weep drainage system, attachments, anchors, and perimeter sealant.

C. Locate on-site where directed by Architect. Mock-up may remain as part of the Work.

1.08 DELIVERY, STORAGE, AND HANDLING

A. Handle products of this section in accordance with AAMA CW-10.

B. Protect finished aluminum surfaces with wrapping. Do not use adhesive papers or sprayed coatings that bond to aluminum when exposed to sunlight or weather.

1.09 FIELD CONDITIONS

A. Do not install sealants when ambient temperature is less than 40 degrees F. Maintain this minimum temperature during and 48 hours after installation.

1.10 WARRANTY

A. Provide five year manufacturer warranty against failure of glass seal on insulating glass units, including interpane dusting or misting. Include provision for replacement of failed units.

B. Provide twenty year manufacturer warranty against excessive degradation of exterior finish. Include provision for replacement of units with excessive fading, chalking, or flaking.

PART 2 PRODUCTS

2.01 BASIS OF DESIGN - ALUMINUM CURTAINWALL

A. Locations: All curtainwall locations in exterior building envelope and where 1" insulating glass is scheduled.

B. Manufacturer and Product: Kawneer 1600 Wall System 3 Curtanwall System: www.kawneer.com.

C. Curtainwall System:
   1. Description: Shear block fabrication, with concealed fastener joinery.
   2. Components: Manufacturer's standard extruded aluminum mullions, 90, and 135 degree inside and outside corner posts, entrance door framing, and indicated shapes.
   3. Frame depth: 2-1/2" x 6"
   4. Glazing: inside/outside glazed pressure plate format with 1" (25.4) double glazed insulating glass; captured format.
   5. Horizontals utilize a thermal separator and pressure plate to allow for glazing or re-glazing from the exterior

D. Other Manufacturers: Provide either product identified as "Basis of Design" or an equivalent product of a manufacturer below with approved submittal meeting the design criteria..
   1. YKK AP America Inc: www.ykkap.com.
   2. Oldcastle Building Envelope: www.obe.com..

E. Substitutions: See Section 01 6000 - Product Requirements.
   1. For any product not identified as "Basis of Design", submit information as specified for substitutions.

2.02 CURTAIN WALL

A. Aluminum-Framed Curtain Wall: Factory fabricated, factory finished aluminum framing members with infill, and related flashings, anchorage and attachment devices.
   1. Inside/Outside glazed, with pressure plate and mullion cover.
   2. Vertical Mullion Face Width: 2-1/2 inches.
   3. Vertical Mullion Depth: 6 inches.
   4. Finish: Superior performing organic coatings.
      a. Factory finish surfaces that will be exposed in completed assemblies.
      b. Touch-up surfaces cut during fabrication so that no natural aluminum is visible in completed assemblies, including joint edges.
      c. Coat concealed metal surfaces that will be in contact with cementitious materials or dissimilar metals with bituminous paint.
   5. Provide flush joints and corners, weathersealed, accurately fitted and secured; prepared to receive anchors; fasteners and attachments concealed from view; reinforced as required for imposed loads.
   6. Construction: Eliminate noises caused by wind and thermal movement, prevent vibration harmonics, and prevent "stack effect" in internal spaces.
   7. System Internal Drainage: Drain to the exterior by means of a weep drainage network any water entering joints, condensation occurring in glazing channel, and migrating moisture occurring within system.

8. Air and Vapor Seal: Maintain continuous air barrier and vapor retarder throughout assembly, primarily in line with inside pane of glazing and inner sheet of infill panel and heel bead of glazing compound.
9. Perimeter Clearance: Minimize space between framing members and adjacent construction while allowing expected movement.
10. Preparation for Window Treatments: Provide reinforced interior horizontal head rail.

B. Structural Performance Requirements: Design and size components to withstand the following load requirements without damage or permanent set.
1. Design Wind Loads: Comply with the requirements of ASCE 7.
a. Member Deflection: For spans less than 13 feet 6 inches, limit member deflection to flexure limit of glass in any direction, and maximum of 1/175 of span or 3/4 inch, whichever is less and with full recovery of glazing materials.
b. Member Deflection: For spans over 13 feet 6 inches and less than 40 feet, limit member deflection to flexure limit of glass in any direction, and maximum of 1/240 of span plus 1/4 inch, with full recovery of glazing materials.
2. Seismic Loads: Design and size components to withstand seismic loads and sway displacement in accordance with requirements of ASCE 7.
3. Interstory Differential Lateral Movement: Meeting pass/fail criteria of AAMA 501.4 for Use Group I, Standard Occupancy, when tested at design displacement of 0.010 times greater adjacent story height, maximum, and 1.5 times design displacement, through three complete cycles.
4. Movement: Accommodate the following movement without damage to components or deterioration of seals:
a. Expansion and contraction caused by 180 degrees F surface temperature.
b. Expansion and contraction caused by cycling temperature range of 170 degrees F over a 12 hour period.
c. Movement of curtain wall relative to perimeter framing.
d. Deflection of structural support framing, under permanent and dynamic loads.

C. Water Penetration Resistance: No uncontrolled water on indoor face when tested as follows:
1. Test Pressure Differential: 12 psf.
2. Test Method: ASTM E331.

D. Air Leakage: Maximum of 0.06 cu ft/min sq ft of wall area, when tested in accordance with ASTM E283 at 6.27 psf pressure differential across assembly.

E. Thermal Performance Requirements:
1. Condensation Resistance Factor of Framing: 70, minimum, measured in accordance with AAMA 1503.
2. Overall U-value Including Glazing: 0.42 Btu/(hr sq ft deg F), maximum.

2.03 COMPONENTS

A. Aluminum Framing Members: Tubular aluminum sections, thermally broken with interior section insulated from exterior, drainage holes and internal weep drainage system.
1. Cross-Section: As indicated on drawings.

B. Glazing: As specified in Section 08 8000.

C. Infill Panels: Insulated, aluminum sheet face and back, with edges formed to fit glazing channel and sealed.
1. Substrate: high density tempered hardboard and impact resistant layer
2. Core: Rigid polyisocyanurate insulation.

3. Interior and Exterior Finish: Superior performance organic coating, custom color to match Architect's sample.
4. Manufacturers: Mapes Industries, Inc.

D. Column Covers: Aluminum, 10 gage, 0.125 inch minimum thickness, finish to match curtain wall framing members.
1. Location: Square tube column enclosures at Performing Arts Center and Gymnasium Vestibules.

2.04 MATERIALS

A. Extruded Aluminum: ASTM B221 (ASTM B221M).

B. Sheet Aluminum: ASTM B209 (ASTM B209M).

C. Fasteners: Stainless steel; type as required or recommended by curtain wall manufacturer.

D. Firestopping: As specified in Section 07 8400.

E. Perimeter Sealant: Type 1 specified in Section 07 9200.

F. Glazing Gaskets: Type to suit application to achieve weather, moisture, and air infiltration requirements.

G. Glazing Accessories: As specified in Section 08 8000.

2.05 FINISHES

A. Superior Performing Organic Coatings: AAMA 2605 multiple coat, thermally cured polyvinylidene fluoride system.
1. Polyvinylidene fluoride (PVDF) multi-coat thermoplastic fluoropolymer coating system, including minimum 70 percent PVDF color topcoat and minimum total dry film thickness of 0.9 mil; color and gloss as indicated on drawings.

B. Color: To be selected by Architect from manufacturer's full range.

C. Touch-Up Materials: As recommended by coating manufacturer for field application.

PART 3 EXECUTION

3.01 EXAMINATION

A. Verify dimensions, tolerances, and method of attachment with other related work.

B. Verify that curtain wall openings and adjoining air and vapor seal materials are ready to receive work of this section.

C. Verify that anchorage devices have been properly installed and located.

3.02 INSTALLATION

A. Install curtain wall system in accordance with manufacturer's instructions.

B. Attach to structure to permit sufficient adjustment to accommodate construction tolerances and other irregularities.

C. Provide alignment attachments and shims to permanently fasten system to building structure.

D. Align assembly plumb and level, free of warp or twist. Maintain assembly dimensional tolerances, aligning with adjacent work.

E. Provide thermal isolation where components penetrate or disrupt building insulation.

F. Install sill flashings. Turn up ends and edges; seal to adjacent work to form water tight dam.

G. Install firestopping at each floor slab edge.

H. Provide low-expansion foam insulation in shim spaces at perimeter of assembly to maintain continuity of thermal and air barrier.

I. Pressure Plate Framing: Install glazing and infill panels in accordance with Section 08 8000, using interior or exterior glazing method.

J. Touch-up minor damage to factory applied finish; replace components that cannot be satisfactorily repaired.

3.03 TOLERANCES

A. Maximum Variation from Plumb: 0.06 inches every 3 ft non-cumulative or 0.5 inches per 100 ft, whichever is less.

B. Maximum Misalignment of Two Adjoining Members Abutting in Plane: 1/32 inch.

C. Sealant Space Between Curtain Wall Mullions and Adjacent Construction: Maximum of 3/4 inch and minimum of 1/4 inch.

3.04 FIELD QUALITY CONTROL

A. Provide services of manufacturer's field representative to observe installation and submit report.

B. Test installed curtain wall for water leakage in accordance with ASTM E1105 with a uniform test pressure difference of 8.00 lbf/sq ft.
   1. Field test (1) curtainwall CW3 assembly in place. Location of field test to be provided by Architect.
   2. In window fails, perform additional tests at Contractor's expense.
   3. Upon successful completion of testing, curtain wall may remain in place.

C. Replace curtain wall components that have failed field testing and retest until performance is satisfactory.

3.05 ADJUSTING

A. Adjust operating sash for smooth operation.

3.06 CLEANING

A. Remove protective material from pre-finished aluminum surfaces.

B. Wash down surfaces with a solution of mild detergent in warm water, applied with soft, clean wiping cloths. Take care to remove dirt from corners. Wipe surfaces clean.

C. Upon completion of installation, thoroughly clean aluminum surfaces in accordance with AAMA 609 & 610.

3.07 PROTECTION

A. Protect installed products from damage until Date of Substantial Completion.

END OF SECTION

SECTION 08 4500
TRANSLUCENT WALL ASSEMBLIES

PART 1 GENERAL

1.01 SECTION INCLUDES

A. Self supporting aluminum framed vertical glazing system.

B. Self-supporting aluminum framed skylight assemblies

C. Sandwich panels of translucent skins separated with an aluminum grid.

D. Miscellaneous metal trim and related components.

1.02 RELATED REQUIREMENTS

A. Section 07 9200 - Joint Sealants: Sealing joints between perimeter frame and adjacent construction.

B. Section 051200 - Structural Steel

C. Section 061000 - Rough Carpentry

D. Section 074200 - Factory Assembled Metal Wall Panels

1.03 REFERENCE STANDARDS

A. AAMA CW-DG-1 - Aluminum Curtain Wall Design Guide Manual; 1996 (R2005).

B. AAMA CW-10 - Care and Handling of Architectural Aluminum From Shop to Site; 2015.

C. AAMA 501.1 - Standard Test Method for Water Penetration of Windows, Curtain Walls and Doors Using Dynamic Pressure; 2005.

D. AAMA 501.2 - Quality Assurance and Diagnostic Water Leakage Field Check of Installed Storefronts, Curtain Walls, and Sloped Glazing Systems; 2015.

E. AAMA 611 - Voluntary Specification for Anodized Architectural Aluminum; 2014 (2015 Errata).

F. AAMA 1503 - Voluntary Test Method for Thermal Transmittance and Condensation Resistance of Windows, Doors and Glazed Wall Sections; 2009.

G. AAMA 2605 - Voluntary Specification, Performance Requirements and Test Procedures for Superior Performing Organic Coatings on Aluminum Extrusions and Panels (with Coil Coating Appendix); 2013.

H. ASTM A36/A36M - Standard Specification for Carbon Structural Steel; 2014.

I. ASTM A123/A123M - Standard Specification for Zinc (Hot-Dip Galvanized) Coatings on Iron and Steel Products; 2015.

J. ASTM A653/A653M - Standard Specification for Steel Sheet, Zinc-Coated (Galvanized) or Zinc-Iron Alloy-Coated (Galvannealed) by the Hot-Dip Process; 2015.

K. ASTM B209 - Standard Specification for Aluminum and Aluminum-Alloy Sheet and Plate; 2014.

L. ASTM B221 - Standard Specification for Aluminum and Aluminum-Alloy Extruded Bars, Rods, Wire, Profiles, and Tubes; 2014.

M. ASTM E90 - Standard Test Method for Laboratory Measurement of Airborne Sound Transmission Loss of Building Partitions and Elements; 2009 (Reapproved 2016).

N. ASTM E283 - Standard Test Method for Determining the Rate of Air Leakage Through Exterior Windows, Curtain Walls, and Doors Under Specified Pressure Differences Across the Specimen; 2004 (Reapproved 2012).

O. ASTM E330/E330M - Standard Test Method for Structural Performance of Exterior Windows, Doors, Skylights and Curtain Walls by Uniform Static Air Pressure Difference; 2014.

P. ASTM E331 - Standard Test Method for Water Penetration of Exterior Windows, Skylights, Doors, and Curtain Walls by Uniform Static Air Pressure Difference; 2000 (Reapproved 2016).

Q. ASTM E413 - Classification for Rating Sound Insulation; 2016.

R. ASTM E547 - Standard Test Method for Water Penetration of Exterior Windows, Skylights, Doors, and Curtain Walls by Cyclic Static Air Pressure Difference; 2000 (Reapproved 2016).

S. ASTM E1105 - Standard Test Method for Field Determination of Water Penetration of Installed Exterior Windows, Skylights, Doors, and Curtain Walls, by Uniform or Cyclic Static Air Pressure Difference; 2015.

T. SSPC-Paint 20 - Zinc-Rich Primers (Type I, "Inorganic," and Type II, "Organic"); 2002 (Ed. 2004).

1.04 PERFORMANCE REQUIREMENTS

A. System Assembly: Accommodate without damage to system, components or deterioration of seals; movement within system; movement between system and perimeter framing components; dynamic loading and release of loads; deflection of structural support framing, tolerance of supporting components and other relevant factors.

1.05 SUBMITTALS

A. Product Data: Provide component dimensions, describe components within assembly, anchorage and fasteners, panel configuration, internal drainage details.

B. Design Data: Provide framing member structural and physical characteristics, dimensional limitations, and other relevant data.

C. Shop Drawings: Indicate system dimensions, framed opening requirements and tolerances, affected related Work, weep drainage network, expansion and contraction joint location and details, and field welding required.

D. Samples: Submit two , 12 x 12 inch in size, illustrating prefinished aluminum surface, specified panel with skins, glazing materials illustrating edge and corner.

E. Test Reports: Submit substantiating engineering data, test results of previous tests by independent laboratory which purport to meet performance criteria, and other supportive data.

F. Installation Data: Special installation requirements.

1.06 QUALITY ASSURANCE

A. Perform work in accordance with AAMA CW-DG-1.

B. Manufacturer Qualifications: Company specializing in manufacturing products specified in this section, with not less than three years of documented experience.

C. Installer Qualifications: Company specializing in performing the work of this section with minimum ten (10) years of experience and approved manufacturer.

D. Design structural support framing components under direct supervision of a Professional Structural Engineer experienced in design of this Work and licensed in the State of Delaware.

1.07 DELIVERY, STORAGE, AND HANDLING

A. Handle work of this section in accordance with AAMA CW-10.

B. Protect prefinished aluminum surfaces with wrapping or strippable coating. Do not use adhesive papers or sprayed coatings which bond when exposed to sunlight or weather. Puncture wrappings at ends for ventilation.

1.08 FIELD CONDITIONS

A. Do not install sealants when ambient temperature is less than 40 degrees F.

B. Maintain this minimum temperature during and after installation of sealants.

1.09 WARRANTIES

A. Material Workmanship:
   1. Submit manufacturer's and installer's written warranty agreeing to repair or replace panel system work, which fails in materials or workmanship within one year of the date of delivery. Failure of materials or workmanship shall include leakage, excessive deflection, deterioration of finish on metal in excess of normal weathering, defects in accessories, insulated translucent sandwich panels and other components of the work.

B. Exterior Fiberglass Color Change
   1. Provide manufacturer's 10 year warranty.

C. Fiberglass Fiberbloom: Provide manufacturer’s 20 year warranty.

D. Metal Finishes:
   1. Provide manufacturer's 20 year finish warranty.

PART 2 PRODUCTS

2.01 MANUFACTURERS

A. Basis of Design (Wall Systems): Guardian 275, by Major Industries, Inc: www.majorskylights.com.

B. Basis of Design (Skylight Systems): Guardian 275 Translucent Skylight System, by Major Industries, Inc: www.majorskylights.com.

C. Other Acceptable Sandwich Panel Translucent Wall and Roof Assemblies Manufacturers:
   1. Kalwall: www.kalwall.com.
   2. Substitutions: See Section 01 6000 - Product Requirements.

2.02 PERFORMANCE REQUIREMENTS

A. System Design: Design and size components to withstand dead loads and live loads caused by snow, hail, and positive and negative wind loads acting on plane of panel without damage or permanent set.
   1. Design Loads: Calculate in accordance with applicable code.
   2. Measure performance in accordance with ASTM E330/E330M, using test load of 1.5 times the design wind pressure and 10 second duration of maximum load.

B. Deflection: Limit mullion deflection to 3/4 inch with full recovery of glazing materials.

C. System Assembly: Accommodate without damage to system, components or deterioration of seals; movement within system; movement between system and perimeter framing components; dynamic loading and release of loads; deflection of structural support framing, tolerance of supporting components, interstory drift.

D. Air Infiltration: Limit air infiltration through assembly to 0.01 cu ft/min sq ft of glazed area, measured at a reference differential pressure across assembly of 6.24 psf as measured in accordance with ASTM E283.

E. Water Leakage: None, when measured in accordance with ASTM E331 at a test pressure difference of 15 lbf/sq ft.

F. Expansion / Contraction: System to provide for expansion and contraction within system components caused by a cycling temperature range of 170 degrees F over a 12 hour period without causing detrimental effect to system components.

G. System Internal Drainage: Drain water entering joints, condensation occurring in framing system, or migrating moisture occurring within system, to the exterior by a weep drainage network.

2.03 MATERIALS

A. Extruded Aluminum: ASTM B221 (ASTM B221M).

B. Sheet Aluminum: ASTM B209 (ASTM B209M).

C. Sheet Steel: Hot-dipped galvanized steel sheet, ASTM A653/A653M, with G90/Z275 coating.

D. Steel Sections: ASTM A36/A36M; shaped to suit mullion sections.

E. Fasteners: Stainless or galvanized steel.

2.04 COMPONENTS

A. Translucent Wall and Skylight Systems: Structurally reinforced translucent panels, with self supporting framing, shop fabricated, factory prefinished, battens, cap strips, related flashings, anchorage and attachment devices.

B. Panels: Bonded to both sides of structural extruded aluminum, thermally broken, interlocking I- beam panel grid core of 12" x 24" In-line Shoji pattern; exposed surfaces of exterior sheet chemically and permanently treated to protect against surface erosion and extreme weather conditions: ; polyvinyl fluoride film coated

1. Panel Length: As shown on drawings.
2. Panel Width: As shown on drawings.
3. Panel Thickness: 2-3/4 inches
4. Exterior Face: Smooth, .070" thick.
   a. Color: Crystal
5. Interior face: Smooth, .045" thick.
   a. Color: Crystal
6. Visible Light Transmittance (VLT): 30%
7. U-Factor:
   a. NFRC 100-2010 certified values for complete wall system (including internal grid and perimeter framing - thermally broken): 0.29
8. Solar Heat Gain Coefficient (SHGC): 0.36
9. Panel Weeps: Weep holes provided on down slope side of installed panels to permit condensation to leave panel interior.

C. Battens, Cover Strips, Cover Plates, and Integral Flashings: Extruded aluminum, to suit location and application; sized to rigidly retain panels in place.

D. Thermal Breaks:

1. Perimeter Framing System: Poured and debridged structural polyurethane.

E. Flashings:.080 inch thick aluminum, finish as selected, secured with concealed fastening method.

F. Weather Seals: To suit application; non-bleeding; non-staining.

G. Sealant for Within Translucent Assembly: As required by manufacturer.

H. Sill Flashing Sealant: Elastomeric, silicone or polyurethane, and compatible with flashing material.

2.05 FABRICATION

A. Fabricate system components with minimum clearances and shim spacing around perimeter of assembly, and ensure proper installation and dynamic movement of perimeter seals.

B. Accurately fit and secure joints and corners. Make joints flush and hairline.

C. Prepare components to receive fabricated anchor devices.

D. Locate fasteners and attachments to ensure concealment from view.

E. Reinforce framing members for external imposed loads.

2.06 FINISHES

A. Superior Performing Organic Coatings: AAMA 2605 multiple coat, thermally cured polyvinylidene fluoride system.

B. Color: To be selected by Architect from manufacturer's full range.

C. Concealed Steel Items:
   1. Galvanized in accordance with requirements of ASTM A123/A123M.

D. Apply one coat of bituminous paint to concealed aluminum and steel surfaces in contact with cementitious or dissimilar materials.

PART 3 EXECUTION

3.01 EXAMINATION

A. Verify dimensions, tolerances, and method of attachment with other work.
   1. Do not proceed with installation until unsatisfactory components are replaced.

B. Verify wall openings and adjoining air barrier and vapor retarder materials are ready to receive work of this section.

3.02 WALL PANEL INSTALLATION

A. Install translucent wall panel system with cells vertical in accordance with manufacturer instructions.

B. Attach to structure to permit sufficient adjustment to accommodate construction tolerances and other irregularities.

C. Provide alignment attachments and shims to permanently fasten system to building structure.

D. Align assembly plumb and level, free of warp or twist. Maintain assembly dimensional tolerances and align with adjacent work.

E. Provide thermal isolation where components penetrate or disrupt building insulation.

F. Install flashings.

G. Pack fibrous insulation in shim spaces at perimeter of assembly to maintain continuity of thermal barrier.

3.03 SKYLIGHT INSTALLATION

A. Install skylights level, plumb, square, and accurately aligned, and in accordance with manufacturer's instructions at locations indicated on the approved drawings.

B. Anchor skylights securely to supports using attachment methods that permit adjustment for construction tolerances, irregularities, alignment, and expansion and contraction.

C. Install skylights including flashings, fasteners, hardware, sealants, and glazing materials required for a complete, weatherproof installation.

3.04 TOLERANCES

A. Maximum Variation from Plumb: 0.06 inches every 3 ft non-cumulative or 0.5 inches per 100 ft, whichever is less.

B. Maximum Misalignment of Two Adjoining Members Abutting in Plane: 1/32 inch.

C. Sealant Space Between Panel System Members and Adjacent Construction: Maximum of 3/4 inch and minimum of 1/4 inch.

3.05 FIELD QUALITY CONTROL

A. Inspection will monitor quality of installation and glazing.

B. Test installed curtain wall for water leakage in accordance with AAMA 501.2. (hose test)

C. Replace components that have failed field testing and retest until performance is satisfactory.

3.06 CLEANING

A. Remove protective material from prefinished aluminum surfaces.

B. Wash down surfaces with a solution of mild detergent in warm water, applied with soft, clean wiping cloths; remove dirt from corners and wipe surfaces clean.

3.07 PROTECTION

A. Protect finished work from damage until Date of Substantial Completion.

END OF SECTION

SECTION 08 5113
ALUMINUM WINDOWS

PART 1 GENERAL

1.01 SECTION INCLUDES

A. Extruded aluminum windows with fixed sash, operating sash, and infill panels.

B. Factory glazing.

C. Operating hardware.

D. Receptor frame and panning.

1.02 RELATED REQUIREMENTS

A. Section 07 9200 - Joint Sealants: Sealing joints between window frames and adjacent construction.

1.03 REFERENCE STANDARDS

A. AAMA/WDMA/CSA 101/I.S.2/A440 - North American Fenestration Standard/Specification for windows, doors, and skylights; 2011.

B. AAMA CW-10 - Care and Handling of Architectural Aluminum From Shop to Site; 2015.

C. AAMA 609 & 610 - Cleaning and Maintenance Guide for Architecturally Finished Aluminum (Combined Document); 2015.

D. AAMA 2605 - Voluntary Specification, Performance Requirements and Test Procedures for Superior Performing Organic Coatings on Aluminum Extrusions and Panels (with Coil Coating Appendix); 2013.

E. ASTM E283 - Standard Test Method for Determining the Rate of Air Leakage Through Exterior Windows, Curtain Walls, and Doors Under Specified Pressure Differences Across the Specimen; 2004 (Reapproved 2012).

F. ASTM E331 - Standard Test Method for Water Penetration of Exterior Windows, Skylights, Doors, and Curtain Walls by Uniform Static Air Pressure Difference; 2000 (Reapproved 2016).

G. ASTM E1105 - Standard Test Method for Field Determination of Water Penetration of Installed Exterior Windows, Skylights, Doors, and Curtain Walls, by Uniform or Cyclic Static Air Pressure Difference; 2015.

1.04 ADMINISTRATIVE REQUIREMENTS

A. Preinstallation Meeting: Convene one week before starting work of this section.

1.05 SUBMITTALS

A. Product Data: Provide component dimensions, information on glass and glazing, internal drainage details, and descriptions of hardware and accessories.

B. Shop Drawings: Indicate opening dimensions, elevations of different types, framed opening tolerances, method for achieving air and vapor barrier seal to adjacent construction, anchorage locations, custom panning profiles, and installation requirements.

C. Samples: Submit two samples, 12 by 12 inch in size illustrating typical corner construction, accessories, and finishes.

D. Grade Substantiation: Prior to submitting shop drawings or starting fabrication, submit one of the following showing compliance with specified grade:
   1. Evidence of AAMA Certification.
   2. Evidence of WDMA Certification.

3. Evidence of CSA Certification.
4. Test report(s) by independent testing agency itemizing compliance and acceptable to authorities having jurisdiction.

E. Test Reports: Prior to submitting shop drawings or starting fabrication, submit test report(s) by independent testing agency showing compliance with performance requirements in excess of those prescribed by specified grade.

F. Manufacturer's Installation Instructions: Include complete preparation, installation, and cleaning requirements.

1.06 QUALITY ASSURANCE

A. Manufacturer Qualifications: Company specializing in manufacturing products specified in this section with minimum three years of documented experience.

B. Installer Qualifications: Company specializing in performing work of type specified and with at least three years of documented experience.

1.07 MOCK-UP

A. See Section 01 4000 - Quality Requirements, for general requirements for mock-ups.

B. Provide one (1) full-size Window Type W1 mock-up including all components occurring on project. Assemble to illustrate component assembly including glazing materials, weep drainage system, attachments, anchors, and perimeter sealant.

C. Locate on-site in exterior wall assembly mockup. Mock-up may not remain as part of the Work.

1.08 DELIVERY, STORAGE, AND HANDLING

A. Comply with requirements of AAMA CW-10.

B. Protect finished surfaces with wrapping paper or strippable coating during installation. Do not use adhesive papers or sprayed coatings that bond to substrate when exposed to sunlight or weather.

1.09 FIELD CONDITIONS

A. Do not install sealants when ambient temperature is less than 40 degrees F.

B. Maintain this minimum temperature during and 24 hours after installation of sealants.

1.10 WARRANTY

A. See Section 01 7800 - Closeout Submittals, for additional warranty requirements.

B. Correct defective Work within a five year period after Date of Substantial Completion.

C. Provide 10 year manufacturer warranty against failure of glass seal on insulating glass units, including interpane dusting or misting. Include provision for replacement of failed units.

D. Provide twenty year manufacturer warranty against excessive degradation of exterior finish. Include provision for replacement of units with excessive fading, chalking, or flaking.

PART 2 PRODUCTS

2.01 BASIS OF DESIGN - AW PERFORMANCE CLASS WINDOWS

A. Grade: AAMA/WDMA/CSA 101/I.S.2/A440 having Performance Class of AW, and Performance Grade at least as high as specified design pressure.

B. Hung Windows, Vertically Sliding; with Matching Fixed Units:
1. Basis of Design: Kawneer Company Inc.: Series NX-5400 Windows - Single Hung Tilt, 3-1/4" (83 mm) frame depth, CW-PG45-H

C. Other Manufacturers: Provide either the product identified as "Basis of Design" or an equivalent product of one of the manufacturers listed below:
   1. EFCO, a Pella Company: www.efcocorp.com/#sle.
   2. Peerless Products Inc..
   3. Graham Architectural Products Corp.

D. Substitutions: See Section 01 6000 - Product Requirements.
   1. For any product not identified as "Basis of Design", submit information as specified for substitutions.

2.02 WINDOWS

A. Aluminum Windows: Extruded aluminum frame and sash, factory fabricated, factory finished, with operating hardware, related flashings, and anchorage and attachment devices.
   1. Provide units factory glazed.
   2. Fabrication: Joints and corners flush, hairline, and weatherproof, accurately fitted and secured; prepared to receive anchors; fasteners and attachments concealed from view; reinforced as required for operating hardware and imposed loads.
   3. Perimeter Clearance: Minimize space between framing members and adjacent construction while allowing expected movement.
   4. Movement: Accommodate movement between window and perimeter framing and deflection of lintel, without damage to components or deterioration of seals.
   5. System Internal Drainage: Drain to the exterior by means of a weep drainage network any water entering joints, condensation occurring in glazing channel, and migrating moisture occurring within system.
   6. Thermal Movement: Design to accommodate thermal movement caused by 180 degrees F surface temperature without buckling stress on glass, joint seal failure, damaging loads on structural elements, damaging loads on fasteners, reduction in performance or other detrimental effects.

B. Performance Requirements: Provide products that comply with the following:
   1. General: Provide aluminum windows capable of complying with performance requirements indicated, based on testing manufacturer's windows that are representative of those specified, and that are of minimum test size required by AAMA/WDMA 101/I.S.2/NAFS.
   2. Where manufacturer's standard window units comply with requirements and have been tested in accordance with specified AAMA/WDMA/CSA 101/I.S.2/A440-05 tests, provide certification by AAMA certified independent laboratory showing compliance with such tests. Submit copy of the test report signed by the independent laboratory.
   3. Structural Performance: Provide aluminum windows capable of withstanding the effects of the following loads, based on testing units representative of those indicated for Project that pass AAMA/WDMA 101/I.S.2/NAFS, Uniform Load Structural Test:
      a. Design Wind Loads: Determine design wind loads applicable to Project from basic wind speed indicated in miles per hour (meters per second) at 33 feet (10 m) above grade, according to ASCE 7, Section 6.5, "Method 2-Analytical Procedure," based on mean roof heights above grade indicated on Drawings.
         1) Refer to structural drawings for lateral load design information.
      b. Deflection: Design glass framing system to limit lateral deflections of glass edges to less than 1/175 of glass-edge length or 3/4 inch (19 mm), whichever is less, at design pressure, but not less than 45 pounds per square foot, based on testing performed

according to AAMA/WDMA 101/I.S.2/NAFS, Uniform Load Deflection Test or structural computations.

c. Air Infiltration Test: Not exceed 0.30 cubic feet per minute per foot of crack length when tested at a pressure of 6.24 psf. Adjust sash to operate in either direction with a force not exceeding 45 pounds after the sash is in motion. Perform tests in accordance with ASTM E 283 with the sash in a closed and locked position.

d. Water Resistance Test: Subject window unit to a water resistance test in accordance with ASTM E 331 with no water passing the interior face of the window frame and no leakage as defined in the test method, based on 15% of the positive design pressure for all grades except 0.20 times the positive design pressure for AW grade, but not less than 10 lbf/sq.

e. Uniform Load Structural Test: Apply a minimum exterior and interior uniform load of 67.5 pounds per square foot to the entire outside surface of the test unit. Maintain this test load for a period of 10 seconds. Results: No glass breakage, permanent damage of fasteners, hardware parts, support arms, actuating mechanisms, or any other damage causing the window to be inoperable. And no permanent deformation of any frame or vent member in excess of 0.4 percent of its span.

4. Thermal Movements: Provide aluminum windows, including anchorage, that allow for thermal movements resulting from the following maximum change (range) in ambient and surface temperatures by preventing buckling, opening of joints, overstressing of components, failure of joint sealants, failure of connections, and other detrimental effects. Base engineering calculation on surface temperatures of materials due to both solar heat gain and nighttime-sky heat loss.

   a. Temperature Change (Range): 120 deg F, ambient; 180 deg F material surfaces

C. THERMAL PERFORMANCE: Comply with following:

1. U Value Simulation: Thermal computer simulation per NFRC 100-04, at the prescribed 48” x 60” Non-Residential Size, glazed with 7/8” insulating glass made with 1/8” clear exterior glass lite, thermoplastic butyl spacer, argon gas, and 1/8” glass with a soft coat low E coating on the #3 surface of the interior lite: Thermal Transmittance to be maximum 0.37 BTU/HR/Sq.FT/°F.

2. Condensation Resistance Simulation: Thermal computer simulation per NFRC 500-04, at the prescribed 48” x 60” Non-Residential Size, glazed with 7/8” insulating glass made with 1/8” clear exterior glass lite, thermoplastic butyl spacer, argon gas, and 1/8” glass with a soft coat low E coating on the #3 surface of the interior lite.

   a. Condensation Resistance to be minimum 50.

2.03 MATERIALS

A. Aluminum Extrusions: Alloy and temper recommended by aluminum window manufacturer for strength, corrosion resistance, and application of required finish and not less than 0.070" (1.8 mm) wall thickness at any location for the main frame and sash members.

B. Thermal Barrier: The thermal barrier shall consist of integral structural thermal break made with glass-reinforced nylon strips installed continuously and mechanically bonded to the aluminum.

C. Fasteners: Aluminum, nonmagnetic stainless steel or other materials to be non-corrosive and compatible with aluminum window members, trim, hardware, anchors, and other components.

D. Anchors, Clips, and Accessories: Aluminum, nonmagnetic stainless steel, or zinc-coated steel or iron complying with ASTM B633 for SC3 severe service conditions; provide sufficient strength to withstand design pressure indicated.

E. Reinforcing Members: Aluminum, nonmagnetic stainless steel, or nickel/chrome-plated steel complying with ASTM B456 for Type SC3 severe service conditions, or zinc-coated steel or iron complying with ASTM B633 for SC3 severe service conditions; provide sufficient strength to withstand design pressure indicated.

F. Sealant: For sealants required within fabricated windows, provide window manufacturer's standard, permanently elastic, non-shrinking, and non-migrating type recommended by sealant manufacturer for joint size and movement.

2.04 HARDWARE

A. General: Provide manufacturer's standard hardware fabricated from aluminum, stainless steel, or other corrosion-resistant material compatible with aluminum; designed to smoothly operate, tightly close, and securely lock aluminum windows, and sized to accommodate sash weight and dimensions.

B. Single Hung Window Typical Hardware:
   1. Typical Hardware:
      a. White zinc die cast Sweep Lock
      b. Zinc Pivot Bars
      c. White nylon Custodial Tilt Releases

2.05 ACCESORIES

A. Spacers, Setting Blocks, Gaskets, and Bond Breakers: Manufacturer's standard permanent, non-migrating types in hardness recommended by manufacturer, compatible with sealants, and suitable for system performance requirements.

B. Framing system gaskets, sealants, and joint fillers as recommended by manufacturer for joint type.

C. Sealants and joint fillers for joints at perimeter of window system as specified in Division 7 Section “Joint Sealants”.

D. Perimeter Anchors: When steel anchors are used, provide insulation between steel material and aluminum material to prevent galvanic action.

E. Muntin Grids: Extruded aluminum profiles, 6063-T6 alloy and temper and as follows:
   1. Between the glass muntins.
   2. Width: 1 inch.
   3. Configuration: as shown.

F. Exterior Panning: Extruded aluminum, 6063-T6 alloy and temper, extruded to profiles and details indicated. Seal exterior joints with manufacturer's standard sealant to assure water-tight joints.
   1. Exterior Panning and Trims: All panning profiles shall be a minimum thickness of 0.062" (1.57 mm) to match the profiles as shown the drawings. Any profile variations shall be submitted to the architect and/or owner for approval 10 days prior to bid date. All panning shall be factory fabricated for field assembly. All corner joinery shall be factory mitered. Joinery at the sill shall be coped and butt-type construction. All preparations for assembly shall be completed by the window manufacturer. Upon assembly, panning frame joints shall be back-sealed to prevent moisture penetration.

G. Coupling Mullions: Shall be extruded aluminum of 6063-T6 alloy and temper of profile and dimensions indicated on drawings. Mullions shall provide structural properties to resist wind pressure required by performance criteria and standards.

H.

2.06 FABRICATION

A. Framing Members, General: Fabricate components that, when assembled, have the following characteristics:
   1. Profiles that are sharp, straight, and free of defects or deformations.
   2. Accurately fit joints; make joints flush, hairline and weatherproof.
   3. Means to drain water passing joints, condensation within framing members, and moisture migrating within the system to exterior.
   4. Physical and thermal isolation of glazing from framing members.
   5. Accommodations for thermal and mechanical movements of glazing and framing to maintain required glazing edge clearances.
   6. Provisions for field replacement of glazing.
   7. Fasteners, anchors, and connection devices that are concealed from view to greatest extent possible.

B. Window Frame Joinery: Mitered and Mechanically clipped and/or staked. Factory sealed frame and corner joints.

C. Fabricate aluminum windows in sizes indicated. Include a complete system for assembling components and anchoring windows.

D. Fabricate aluminum windows that are re-glazable without dismantling sash or framing.

E. Thermally Broken Construction: Fabricate aluminum windows with an integral, concealed, low-conductance thermal barrier. Thermal barriers shall be designed in accordance with AAMA TIR A8.
   1. Thermal Barrier: The thermal barrier shall consist of integral structural thermal break made with glass-reinforced nylon strips installed continuously and mechanically bonded to the aluminum.

F. Mullions: Provide mullions and cover plates as shown, matching window units, complete with anchors for support to structure and installation of window units. Allow for erection tolerances and provide for movement of window units due to thermal expansion and building deflections, as indicated. Provide mullions and cover plates capable of withstanding design loads of window units.

G. Sub frames: Provide sub frames with anchors for window units as shown, of profile and dimensions indicated but not less than 0.093" (2.4 mm) thick extruded aluminum. Miter or cope corners, and join with concealed mechanical joint fasteners. Finish to match window units. Provide sub frames capable of withstanding design loads of window units.

H. Factory-Glazed Fabrication: Glaze aluminum windows in the factory where practical and possible for applications indicated. Comply with requirements with AAMA/WDMA/CSA 101/I.S.2/A440 (NAFS).

I. Glazing Stops: Provide snap-on glazing stops coordinated with Division 08 Section “Glazing” and glazing system indicated. Provide glazing stops to match frame.

2.07 GLAZING

A. Glass: Clear insulating-glass units, argon gas filled, with low-E coating and warm edge spacers. Provide tempered glazing where required to comply with code, and where indicated.
   1. Glass thickness: 1/8 inch.
   2. Total thickness: 7/8 inch.
   3. Low-E Coating: SunGuard SNX 62/27 on #2 surface.

B. Glazing System: Manufacturer's standard factory-glazing system with additional wet applied toe bead that produces weather tight seal.

2.08 FINISHES

A. Superior Performing Organic Coatings: AAMA 2605 multiple coat, thermally cured polyvinylidene fluoride system.
   1. Polyvinylidene fluoride (PVDF) multi-coat thermoplastic fluoropolymer coating system, including minimum 70 percent PVDF color topcoat and minimum total dry film thickness of 0.9 mil; color and gloss as indicated on drawings.

PART 3 EXECUTION

3.01 EXAMINATION

A. Verify that wall openings and adjoining air and vapor seal materials are ready to receive aluminum windows.

3.02 INSTALLATION

A. Install windows in accordance with manufacturer's instructions.

B. Attach window frame and shims to perimeter opening to accommodate construction tolerances and other irregularities.

C. Align window plumb and level, free of warp or twist. Maintain dimensional tolerances and alignment with adjacent work.

D. Install sill and sill end angles.

E. Set sill members and sill flashing in continuous bead of sealant.

F. Provide thermal isolation where components penetrate or disrupt building insulation. Pack fibrous insulation in shim spaces at perimeter of assembly to maintain continuity of thermal barrier.

G. Install operating hardware not pre-installed by manufacturer.

3.03 TOLERANCES

A. Maximum Variation from Level or Plumb: 1/16 inches every 3 ft non-cumulative or 1/8 inches per 10 ft, whichever is less.

3.04 FIELD QUALITY CONTROL

A. Test installed windows for compliance with performance requirements for water penetration, in accordance with ASTM E1105 using uniform pressure and the same pressure difference as specified for laboratory testing.
   1. Test one window of each type, as directed by Architect.
   2. If any window fails, test additional windows at Contractor's expense.

B. Replace windows that have failed field testing and retest until performance is satisfactory.

3.05 ADJUSTING

A. Adjust hardware for smooth operation and secure weathertight closure.

3.06 CLEANING

A. Remove protective material from factory finished aluminum surfaces.

B. Wash surfaces by method recommended and acceptable to window manufacturer; rinse and wipe surfaces clean.

C. Upon completion of installation, thoroughly clean aluminum surfaces in accordance with AAMA 609 & 610.

D. Remove excess glazing sealant by moderate use of mineral spirits or other solvent acceptable to sealant and window manufacturer.

END OF SECTION

SECTION 08 5674
ACOUSTICALLY RATED CONTROL ROOM WINDOWS

PART 1 GENERAL

1.01 SECTION INCLUDES

A. This is a single track, horizontal sliding window with a minimum acoustical laboratory rating of STC-35. No structural center post is acceptable. Center window panes shall have pile inserts at meeting stile to create a tight seal to each other when closed. All perimeter, intermediate and center stile interfaces shall be sealed with pile or neoprene weather-stripping. Sash shall be removable to the inside for cleaning.

B. Single glazed acoustical window shall be factory glazed and sealed. Window system shall include: glass, aluminum framing and trim, sound deadening treatments, desiccants and all accessory items as shown on the drawings and required for a complete installation, including caulking and anchorage to adjacent construction.

C. Low-iron, ultra clear glass in Projection Room.

1.02 RELATED REQUIREMENTS

A. Section 07 9200 - Joint Sealants: Perimeter sealants and backup materials

B. Section 08 8000 - Glazing

1.03 SUBMITTALS

A. Before delivery of the window, contractor shall submit for approval of the Acoustical Consultant, the following documents:

B. Shop drawings of the glass, frame, hardware and seals showing major operating dimensions and cross-sections of windows and seals.

C. Certified test reports indicating the acoustical performance of the window meets the Sound Transmission Class (STC) performance called out in the schedule or drawings. Test data shall be produced from an accredited independent acoustical laboratory. Reports should indicate that the test was performed on the window assembly of the type to be supplied in conformance with the requirements of test method ASTM E90-75,81,85,87 (or most current year of test methodology). Test data shall indicate type of hardware used on the window. Manufacturer shall indicate whether additional treatment of the window frame, by the insertion of grout or high density glass/mineral fiber in the cavity between frame and wall, shall be necessary to meet the acoustical requirements of this specification. Acoustical consultant shall be the judge of technical acceptability of these data.

D. Written guarantee that the window is constructed in accordance with the laboratory tested window and free of defects in material and workmanship for a period of one year after installation.

1.04 FIELD CONDITIONS

A. Environmental Requirements: Ensure ambient and surface temperatures and joint conditions are suitable for installation of materials.

PART 2 PRODUCTS

2.01 MANUFACTURERS

A. Series 450 by Mon-Ray, Inc., Minneapolis, MN 800-544-3646 www.monray.com

B. Series 9540 by Peerless Products, Inc., Shawnee Mission, KS 800-279-9999 www.peerlessproducts.com

C. Series 4100 by Wausau Windows, Wausau, WI 715-845-2161 www.wausauwindow.com

2.02 GLASS

A. Lite shall be 1/4” thick laminated glass or as required per the acoustic test report.

2.03 FRAMES

A. Frame shall be identical to that of the acoustically tested unit. Frame shall be free of defects impairing strength and durability. Approximate frame depth to be 4-1/2”. Finish shall be selected by the Architect.

PART 3 EXECUTION

3.01 EXAMINATION

A. Verify existing conditions before starting work.

B. Verify dimensions, tolerances, and method of attachment with other Work.

3.02 INSTALLATION

A. The acoustical window shall be installed under direct supervision of the manufacturer or his representative using skilled mechanics. Anchorage to the building structure shall be in accordance with approved Shop Drawings.

B. The perimeter of each window shall be caulked on both sides. The caulking shall be performed as a part of this work to insure overall performance of the window system.

3.03 ADJUSTING

A. Adjust operating sash and hardware to provide tight fit at contact points and seals for smooth operation and seal closure. Lubricate hardware and moving parts as necessary.

3.04 CLEANING

A. Clean surfaces in compliance with manufacturer’s recommendations; remove excess mastic, mastic smears, foreign materials or other unsightly marks.

B. Clean metal surfaces exercising care to avoid damage.

END OF SECTION

SECTION 08 7100
DOOR HARDWARE

PART 1 - GENERAL

1.1 SUMMARY

A. This Section includes commercial door hardware for the following:
   1. Swinging doors.
   2. Other doors to the extent indicated.

B. Door hardware includes, but is not necessarily limited to, the following:
   1. Mechanical door hardware.
   2. Electromechanical door hardware.
   3. Cylinders specified for doors in other sections.

C. Related Sections:
   1. Section 08 1113 - Hollow Metal Doors and Frames.
   2. Section 08 1416 - Flush Wood Doors.
   3. Section 08 0671 - Hardware Sets.
   4. Division 26 - Electrical.
   5. Division 28 - Access Control.

D. Codes and References: Comply with the version year adopted by the Authority Having Jurisdiction.
   1. ANSI A117.1 - Accessible and Usable Buildings and Facilities.
   2. ICC/IBC - International Building Code.
   3. NFPA 70 - National Electrical Code.
   4. NFPA 80 - Fire Doors and Windows.
   5. NFPA 101 - Life Safety Code.
   6. NFPA 105 - Installation of Smoke Door Assemblies.
   7. State Building Codes, Local Amendments.

E. Standards: All hardware specified herein shall comply with the following industry standards:
   1. ANSI/BHMA Certified Product Standards - A156 Series
   2. UL10C – Positive Pressure Fire Tests of Door Assemblies

1.2 SUBMITTALS

A. Product Data: Manufacturer's product data sheets including installation details, material descriptions, dimensions of individual components and profiles, operational descriptions and finishes.

B. Door Hardware Schedule: Prepared by or under the supervision of supplier, detailing fabrication and assembly of door hardware, as well as procedures and diagrams. Coordinate the final Door Hardware Schedule with doors, frames, and related work to ensure proper size, thickness, hand, function, and finish of door hardware.
   1. Format: Comply with scheduling sequence and vertical format in DHI's "Sequence and Format for the Hardware Schedule."

2. Organization: Organize the Door Hardware Schedule into door hardware sets indicating complete designations of every item required for each door or opening. Organize door hardware sets in same order as in the Door Hardware Sets at the end of Part 3. Submittals that do not follow the same format and order as the Door Hardware Sets will be rejected and subject to resubmission.
3. Content: Include the following information:
   a. Type, style, function, size, label, hand, and finish of each door hardware item.
   b. Manufacturer of each item.
   c. Fastenings and other pertinent information.
   d. Location of door hardware set, cross-referenced to Drawings, both on floor plans and in door and frame schedule.
   e. Explanation of abbreviations, symbols, and codes contained in schedule.
   f. Mounting locations for door hardware.
   g. Door and frame sizes and materials.
   h. Warranty information for each product.
4. Submittal Sequence: Submit the final Door Hardware Schedule at earliest possible date, particularly where approval of the Door Hardware Schedule must precede fabrication of other work that is critical in the Project construction schedule. Include Product Data, Samples, Shop Drawings of other work affected by door hardware, and other information essential to the coordinated review of the Door Hardware Schedule.

C. Shop Drawings: Details of electrified access control hardware indicating the following:
1. Wiring Diagrams: Upon receipt of approved schedules, submit detailed system wiring diagrams for power, signaling, monitoring, communication, and control of the access control system electrified hardware. Differentiate between manufacturer-installed and field-installed wiring. Include the following:
   a. Elevation diagram of each unique access controlled opening showing location and interconnection of major system components with respect to their placement in the respective door openings.
   b. Complete (risers, point-to-point) access control system block wiring diagrams.
   c. Wiring instructions for each electronic component scheduled herein.
2. Electrical Coordination: Coordinate with related sections the voltages and wiring details required at electrically controlled and operated hardware openings.

D. Proof of Certification: Provide copy of manufacturer(s) official certification or accreditation document indicating proof of status as a qualified and authorized provider of the primary Integrated Wiegand Access Control Products.

E. Keying Schedule: After a keying meeting with the owner has taken place prepare a separate keying schedule detailing final instructions. Submit the keying schedule in electronic format. Include keying system explanation, door numbers, key set symbols, hardware set numbers and special instructions. Owner must approve submitted keying schedule prior to the ordering of permanent cylinders/cores.

F. Informational Submittals:
1. Product Test Reports: Indicating compliance with cycle testing requirements, based on evaluation of comprehensive tests performed by manufacturer and witnessed by a qualified independent testing agency.

G. Operating and Maintenance Manuals: Provide manufacturers operating and maintenance manuals for each item comprising the complete door hardware installation in quantity as required in Division 01, Closeout Submittals.

1.3 QUALITY ASSURANCE

A. Manufacturers Qualifications: Engage qualified manufacturers with a minimum 5 years of documented experience in producing hardware and equipment similar to that indicated for this Project and that have a proven record of successful in-service performance.

B. Installer Qualifications: A minimum 3 years documented experience installing both standard and electrified door hardware similar in material, design, and extent to that indicated for this Project and whose work has resulted in construction with a record of successful in-service performance.

C. Door Hardware Supplier Qualifications: Experienced commercial door hardware distributors with a minimum 5 years documented experience supplying both mechanical and electromechanical hardware installations comparable in material, design, and extent to that indicated for this Project. Supplier recognized as a factory direct distributor by the manufacturers of the primary materials with a warehousing facility in Project's vicinity. Supplier to have on staff a certified Architectural Hardware Consultant (AHC) available during the course of the Work to consult with Contractor, Architect, and Owner concerning both standard and electromechanical door hardware and keying.

D. Integrated Wiegand, Wireless, and IP-Enabled Access Control Products Supplier Qualifications: Integrated access control products and accessories are required to be supplied and installed through current members of the ASSA ABLOY "Authorized Channel Partner" (ACP) and "Certified Integrator" (CI) programs. Suppliers are to be factory trained, certified prior to project bid, and a direct purchaser of the specified product. Installers are to be factory trained, certified prior to project bid, and are responsible for commissioning, servicing, and warranting the installed equipment specified for the project.

E. Source Limitations: Obtain each type and variety of door hardware specified in this section from a single source unless otherwise indicated.
   1. Electrified modifications or enhancements made to a source manufacturer's product line by a secondary or third party source will not be accepted.
   2. Provide electromechanical door hardware from the same manufacturer as mechanical door hardware, unless otherwise indicated.

F. Each unit to bear third party permanent label demonstrating compliance with the referenced standards.

G. Keying Conference: Conduct conference to comply with requirements in Division 01 Section "Project Meetings." Keying conference to incorporate the following criteria into the final keying schedule document:
   1. Function of building, purpose of each area and degree of security required.
   2. Plans for existing and future key system expansion.
   3. Requirements for key control storage and software.
   4. Installation of permanent keys, cylinder cores and software.
   5. Address and requirements for delivery of keys.

H. Pre-Submittal Conference: Conduct coordination conference in compliance with requirements in Division 01 Section "Project Meetings" with attendance by representatives of Supplier(s), Installer(s), and Contractor(s) to review proper methods and the procedures for receiving, handling, and installing door hardware.
   1. Prior to installation of door hardware, conduct a project specific training meeting to instruct the installing contractors' personnel on the proper installation and adjustment of their respective products. Product training to be attended by installers of door hardware (including electromechanical hardware) for aluminum, hollow metal and wood doors. Training will include the use of installation manuals, hardware schedules, templates and physical product samples as required.
   2. Inspect and discuss electrical roughing-in, power supply connections, and other preparatory work performed by other trades.
   3. Review sequence of operation narratives for each unique access controlled opening.
   4. Review and finalize construction schedule and verify availability of materials.
   5. Review the required inspecting, testing, commissioning, and demonstration procedures

I. At completion of installation, provide written documentation that components were applied to manufacturer's instructions and recommendations and according to approved schedule.

1.4 DELIVERY, STORAGE, AND HANDLING

A. Inventory door hardware on receipt and provide secure lock-up and shelving for door hardware delivered to Project site. Do not store electronic access control hardware, software or accessories at Project site without prior authorization.

B. Tag each item or package separately with identification related to the final Door Hardware Schedule, and include basic installation instructions with each item or package.

C. Deliver, as applicable, permanent keys, cylinders, cores, access control credentials, software and related accessories directly to Owner via registered mail or overnight package service. Instructions for delivery to the Owner shall be established at the "Keying Conference".

1.5 COORDINATION

A. Templates: Obtain and distribute to the parties involved templates for doors, frames, and other work specified to be factory prepared for installing standard and electrified hardware. Check Shop Drawings of other work to confirm that adequate provisions are made for locating and installing hardware to comply with indicated requirements.

B. Door Hardware and Electrical Connections: Coordinate the layout and installation of scheduled electrified door hardware and related access control equipment with required connections to source power junction boxes, low voltage power supplies, detection and monitoring hardware, and fire and detection alarm systems.

C. Door and Frame Preparation: Doors and corresponding frames are to be prepared, reinforced and pre-wired (if applicable) to receive the installation of the specified electrified, monitoring, signaling and access control system hardware without additional in-field modifications.

1.6 WARRANTY

A. General Warranty: Reference Division 01, General Requirements. Special warranties specified in this Article shall not deprive Owner of other rights Owner may have under other provisions of the Contract Documents and shall be in addition to, and run concurrent with, other warranties made by Contractor under requirements of the Contract Documents.

B. Warranty Period: Written warranty, executed by manufacturer(s), agreeing to repair or replace components of standard and electrified door hardware that fails in materials or workmanship within specified warranty period after final acceptance by the Owner. Failures include, but are not limited to, the following:
   1. Structural failures including excessive deflection, cracking, or breakage.
   2. Faulty operation of the hardware.
   3. Deterioration of metals, metal finishes, and other materials beyond normal weathering.
   4. Electrical component defects and failures within the systems operation.

C. Standard Warranty Period: One year from date of Substantial Completion, unless otherwise indicated.

D. Special Warranty Periods:
   1. Ten years for mortise locks and latches.
   2. Five years for exit hardware.
   3. Twenty five years for manual surface door closer bodies.
   4. Five years for motorized electric latch retraction exit devices.
   5. Two years for electromechanical door hardware.

1.7 MAINTENANCE SERVICE

A. Maintenance Tools and Instructions: Furnish a complete set of specialized tools and maintenance instructions as needed for Owner's continued adjustment, maintenance, and removal and replacement of door hardware.

PART 2 - PRODUCTS

2.1 SCHEDULED DOOR HARDWARE

A. General: Provide door hardware for each door to comply with requirements in Door Hardware Sets and each referenced section that products are to be supplied under.

B. Designations: Requirements for quantity, item, size, finish or color, grade, function, and other distinctive qualities of each type of door hardware are indicated in the Door Hardware Sets at the end of Part 3. Products are identified by using door hardware designations, as follows:
   1. Named Manufacturer's Products: Product designation and manufacturer are listed for each door hardware type required for the purpose of establishing requirements. Manufacturers' names are abbreviated in the Door Hardware Schedule.

C. Products furnished, but not installed, under this Section include the following. Coordinating, purchasing, delivering, and scheduling remain requirements of this Section.

1. Permanent cylinders, cores, and keys to be installed by Owner.

D. Substitutions: Requests for substitution and product approval for inclusive mechanical and electromechanical door hardware in compliance with the specifications must be submitted in writing and in accordance with the procedures and time frames outlined in Division 01, Substitution Procedures. Approval of requests is at the discretion of the architect, owner, and their designated consultants.

2.2 HANGING DEVICES

A. Hinges: ANSI/BHMA A156.1 certified butt hinges with number of hinge knuckles as specified in the Door Hardware Sets.
   1. Quantity: Provide the following hinge quantity, unless otherwise indicated:
      a. Two Hinges: For doors with heights up to 60 inches.
      b. Three Hinges: For doors with heights 61 to 90 inches.
      c. Four Hinges: For doors with heights 91 to 120 inches.
      d. For doors with heights more than 120 inches, provide 4 hinges, plus 1 hinge for every 30 inches of door height greater than 120 inches.
   2. Hinge Size: Provide the following, unless otherwise indicated, with hinge widths sized for door thickness and clearances required:
      a. Widths up to 3’0”: 4-1/2” standard or heavy weight as specified.
      b. Sizes from 3’1” to 4’0”: 5” standard or heavy weight as specified.
   3. Hinge Options: Comply with the following:
      a. Non-removable Pins: Provide set screw in hinge barrel that, when tightened into a groove in hinge pin, prevents removal of pin while door is closed; for the all out-swinging lockable doors.
   4. Acceptable Manufacturers:
      a. Hager Companies (HA).
      b. McKinney Products; ASSA ABLOY Architectural Door Accessories (MK).

B. Continuous Geared Hinges: ANSI/BHMA A156.26 Grade 1-600 certified continuous geared hinge. with minimum 0.120-inch thick extruded 6060 T6 aluminum alloy hinge leaves and a minimum overall width of 4 inches. Hinges are non-handed, reversible and fabricated to template screw locations. Factory trim hinges to suit door height and prepare for electrical cut-outs.
   1. Acceptable Manufacturers:
      a. Hager Companies (HA).
      b. McKinney Products; ASSA ABLOY Architectural Door Accessories (MK).
      c. Pemko Products; ASSA ABLOY Architectural Door Accessories (PE).

2.3 POWER TRANSFER DEVICES

A. Electrified Quick Connect Transfer Hinges: Provide electrified transfer hinges with Molex™ standardized plug connectors and sufficient number of concealed wires (up to 12) to accommodate the electrified functions specified in the Door Hardware Sets. Connectors plug directly to through-door wiring harnesses for connection to electric locking devices and power supplies. Wire nut connections are not acceptable.
   1. Acceptable Manufacturers:
      a. Hager Companies (HA) - ETW-QC (# wires) Option.

b. McKinney Products; ASSA ABLOY Architectural Door Accessories (MK) - QC (# wires) Option.

B. Concealed Quick Connect Electric Power Transfers: Provide concealed wiring pathway housing mortised into the door and frame for low voltage electrified door hardware. Furnish with Molex™ standardized plug connectors and sufficient number of concealed wires (up to 12) to accommodate the electrified functions specified in the Door Hardware Sets. Connectors plug directly to through-door wiring harnesses for connection to electric locking devices and power supplies. Wire nut connections are not acceptable.
1. Acceptable Manufacturers:
a. Securitron (SU) - EL-CEPT Series.

C. Electric Door Wire Harnesses: Provide electric/data transfer wiring harnesses with standardized plug connectors to accommodate up to twelve (12) wires. Connectors plug directly to through-door wiring harnesses for connection to electric locking devices and power supplies. Provide sufficient number and type of concealed wires to accommodate electric function of specified hardware. Provide a connector for through-door electronic locking devices and from hinge to junction box above the opening. Wire nut connections are not acceptable. Determine the length required for each electrified hardware component for the door type, size and construction, minimum of two per electrified opening.
1. Provide one each of the following tools as part of the base bid contract:
a. McKinney Products; ASSA ABLOY Architectural Door Accessories (MK) - Electrical Connecting Kit: QC-R001.
b. McKinney Products; ASSA ABLOY Architectural Door Accessories (MK) - Connector Hand Tool: QC-R003.
2. Acceptable Manufacturers:
a. McKinney Products; ASSA ABLOY Architectural Door Accessories (MK) – QC-C Series.

2.4 DOOR OPERATING TRIM

A. Flush Bolts and Surface Bolts: ANSI/BHMA A156.3 and A156.16, Grade 1, certified.
1. Flush bolts to be furnished with top rod of sufficient length to allow bolt retraction device location approximately six feet from the floor.
2. Furnish dust proof strikes for bottom bolts.
3. Surface bolts to be minimum 8” in length and U.L. listed for labeled fire doors and U.L. listed for windstorm components where applicable.
4. Provide related accessories (mounting brackets, strikes, coordinators, etc.) as required for appropriate installation and operation.
5. Acceptable Manufacturers:
a. Door Controls International (DC).
b. Rockwood Products; ASSA ABLOY Architectural Door Accessories (RO).
c. Trimco (TC).

B. Coordinators: ANSI/BHMA A156.3 certified door coordinators consisting of active-leaf, hold-open lever and inactive-leaf release trigger. Model as indicated in hardware sets.
1. Acceptable Manufacturers:
a. Door Controls International (DC).
b. Rockwood Products; ASSA ABLOY Architectural Door Accessories (RO).
c. Trimco (TC).

C. Door Push Plates and Pulls: ANSI/BHMA A156.6 certified door pushes and pulls of type and design specified in the Hardware Sets. Coordinate and provide proper width and height as required where conflicting hardware dictates.
   1. Fasteners: Provide manufacturer's designated fastener type as indicated in Hardware Sets.
   2. Acceptable Manufacturers:
      a. Hiawatha, Inc. (HI).
      b. Rockwood Products; ASSA ABLOY Architectural Door Accessories (RO).
      c. Trimco (TC).

2.5 CYLINDERS AND KEYING

A. General: Cylinder manufacturer to have minimum (10) years experience designing secured master key systems and have on record a published security keying system policy.

B. Source Limitations: Obtain each type of keyed cylinder and keys from the same source manufacturer as locksets and exit devices, unless otherwise indicated.

C. Cylinders: Original manufacturer cylinders complying with the following:
   1. Mortise Type: Threaded cylinders with rings and cams to suit hardware application.
   2. Rim Type: Cylinders with back plate, flat-type vertical or horizontal tailpiece, and raised trim ring.
   3. Bored-Lock Type: Cylinders with tailpieces to suit locks.
   4. Mortise and rim cylinder collars to be solid and recessed to allow the cylinder face to be flush and be free spinning with matching finishes.
   5. Keyway: Match Facility Standard.

D. Permanent Cores: Manufacturer's standard; finish face to match lockset; complying with the following:
   1. Removable Cores: Core insert, removable by use of a special key, and for use with only the core manufacturer's cylinder and door hardware. Provide removable core (small or large format) as specified in Hardware Sets.

E. Security Cylinders: ANSI/BHMA A156.5, Grade 1, patterned security cylinders and keys able to be used together under the same facility master or grandmaster key system. Cylinders are to be factory keyed.
   1. Acceptable Manufacturers:
      a. Corbin Russwin (RU) - Pyramid PS Series.
      b. No Substitution.

F. Keying System: Each type of lock and cylinders to be factory keyed.
   1. Conduct specified "Keying Conference" to define and document keying system instructions and requirements.
   2. Furnish factory cut, nickel-silver large bow permanently inscribed with a visual key control number as directed by Owner.
   3. Existing System: Key locks to Owner's existing system.

G. Key Quantity: Provide the following minimum number of keys:
   1. Change Keys per Cylinder: Two (2)
   2. Master Keys (per Master Key Level/Group): Five (5).
   3. Construction Keys (where required): Ten (10).

4. Construction Control Keys (where required): Two (2).

H. Construction Keying: Provide temporary keyed construction cores.

I. Key Registration List (Bitting List):
1. Provide keying transcript list to Owner's representative in the proper format for importing into key control software.
2. Provide transcript list in writing or electronic file as directed by the Owner.

J. Key Control Cabinet: Provide a key control system including envelopes, labels, and tags with self-locking key clips, receipt forms, 3-way visible card index, temporary markers, permanent markers, and standard metal cabinet. Key control cabinet shall have expansion capacity of 150% of the number of locks required for the project.
1. Acceptable Manufacturers:
a. Lund Equipment (LU).
b. MMF Industries (MM).
c. Telkee (TK).

2.6 MECHANICAL LOCKS AND LATCHING DEVICES

A. Mortise Locksets, Grade 1 (Heavy Duty): ANSI/BHMA A156.13, Series 1000, Operational Grade 1 certified. Locksets are to be manufactured with a corrosion resistant steel case and be field-reversible for handing without disassembly of the lock body.
1. Acceptable Manufacturers:
a. Corbin Russwin Hardware (RU) – ML2000 Series.
b. No Substitution.

2.7 INTEGRATED WIEGAND OUTPUT LOCKING DEVICES – MULTI-CLASS READER

A. Integrated Wiegand Output Multi-Class Mortise Locks: Wiegand output ANSI A156.13, Grade 1, mortise lockset with integrated card reader, request-to-exit signaling, door position status switch, and latchbolt monitoring in one complete unit. Hard wired, solenoid driven locking/unlocking control of the lever handle trim, 3/4" deadlocking anti-friction latch, and 1" case-hardened steel deadbolt. Lock is U.L listed and labeled for use on up to 3 hour fire rated openings. Available with or without keyed high security cylinder override.
1. Open architecture, hard wired platform supports centralized control of locking units with new or existing Wiegand compatible access control systems. Latchbolt monitoring and door position switch act in conjunction to report door-in-frame (DPS) and door latched (door closed and latched) conditions.
2. Integrated reader supports the following credentials:
a. 125kHz proximity credentials: HID, AWID, Indala, and EM4102.
b. 13.56 MHz proximity credentials: HID iClass, HID iClass SE, SE for MIFARE Classic, DESFire EV1.
3. 12VDC external power supply required for reader and lock, with optional 24VDC lock solenoid. Fail safe or fail secure options.
4. Energy Efficient Design: Provide lock bodies which have a holding current draw of 15mA maximum, and can operate on either 12 or 24 volts. Locks are to be field configurable for fail safe or fail secure operation.
5. Support end-of-line resistors contained within the lock case.

6. Installation requires only one cable run from the lock to the access control panel without requirements for additional proprietary lock panel interface boards or modules.
7. Installation to include manufacturer's access control panel interface board or module where required for Wiegand output protocol.
8. Acceptable Manufacturers:
   a. Corbin Russwin (RU) – ML2000 SE-LP10 Series.
   b. No Substitution.

2.8 AUXILIARY LOCKS

A. Cylindrical Deadlocks: ANSI/BHMA A156.36, Grade 1, cylindrical type deadlocks to fit standard ANSI 161 preparation and 1 3/8" to 1 3/4" thickness doors. Provide tapered collars to resist vandalism and 1" throw solid steel bolt with hardened steel roller pins. Deadlocks to be products of the same source manufacturer and keyway as other locksets.
   1. Acceptable Manufacturers:
      a. Corbin Russwin Hardware (RU) - DL3200 Series.
      b. No Substitution.

2.9 LOCK AND LATCH STRIKES

A. Strikes: Provide manufacturer's standard strike with strike box for each latch or lock bolt, with curved lip extended to protect frame, finished to match door hardware set, unless otherwise indicated, and as follows:
   1. Flat-Lip Strikes: For locks with three-piece antifriction latchbolts, as recommended by manufacturer.
   2. Extra-Long-Lip Strikes: For locks used on frames with applied wood casing trim.
   3. Aluminum-Frame Strike Box: Provide manufacturer's special strike box fabricated for aluminum framing.
   4. Double-lipped strikes: For locks at double acting doors. Furnish with retractable stop for rescue hardware applications.

B. Standards: Comply with the following:
   1. Strikes for Mortise Locks and Latches: BHMA A156.13.
   2. Strikes for Bored Locks and Latches: BHMA A156.2.
   3. Strikes for Auxiliary Deadlocks: BHMA A156.36.
   4. Dustproof Strikes: BHMA A156.16.

2.10 CONVENTIONAL EXIT DEVICES

A. General Requirements: All exit devices specified herein shall meet or exceed the following criteria:
   1. At doors not requiring a fire rating, provide devices complying with NFPA 101 and listed and labeled for "Panic Hardware" according to UL305. Provide proper fasteners as required by manufacturer including sex nuts and bolts at openings specified in the Hardware Sets.
   2. Where exit devices are required on fire rated doors, provide devices complying with NFPA 80 and with UL labeling indicating "Fire Exit Hardware". Provide devices with the

proper fasteners for installation as tested and listed by UL. Consult manufacturer's catalog and template book for specific requirements.

3. Except on fire rated doors, provide exit devices with hex key dogging device to hold the pushbar and latch in a retracted position. Provide optional keyed cylinder dogging on devices where specified in Hardware Sets.
4. Devices must fit flat against the door face with no gap that permits unauthorized dogging of the push bar. The addition of filler strips is required in any case where the door light extends behind the device as in a full glass configuration.
5. Electromechanical Options: Subject to same compliance standards and requirements as mechanical exit devices, electrified devices to be of type and design as specified in hardware sets. Include any specific controllers when conventional power supplies are not sufficient to provide the proper inrush current.
6. Motorized Electric Latch Retraction: Devices with an electric latch retraction feature must use motors which have a maximum current draw of 600mA. Solenoid driven latch retraction is not acceptable.
7. Lever Operating Trim: Where exit devices require lever trim, furnish manufacturer's heavy duty escutcheon trim with threaded studs for thru-bolts.
    a. Lock Trim Design: As indicated in Hardware Sets, provide finishes and designs to match that of the specified locksets.
    b. Where function of exit device requires a cylinder, provide a cylinder (Rim or Mortise) as specified in Hardware Sets.
8. Vertical Rod Exit Devices: Where surface or concealed vertical rod exit devices are used at interior openings, provide as less bottom rod (LBR) unless otherwise indicated. Provide dust proof strikes where thermal pins are required to project into the floor.
9. Narrow Stile Applications: At doors constructed with narrow stiles, or as specified in Hardware Sets, provide devices designed for maximum 2" wide stiles.
10. Extended cycle test: Devices to have been cycle tested in ordinance with ANSI/BHMA 156.3 requirements to 9 million cycles.
11. Rail Sizing: Provide exit device rails factory sized for proper door width application.
12. Through Bolt Installation: For exit devices and trim as indicated in Door Hardware Sets.

B. Conventional Push Rail Exit Devices (Heavy Duty): ANSI/BHMA A156.3, Grade 1 certified panic and fire exit hardware devices furnished in the functions specified in the Hardware Sets. Exit device latch to be stainless steel, pullman type, with deadlock feature.
    1. Acceptable Manufacturers:
        a. Corbin Russwin Hardware (RU) - ED4000 / ED5000 Series.
        b. Sargent Manufacturing (SA) - 80 Series.

C. Tube Steel Removable Mullions: ANSI/BHMA A156.3 removable steel mullions with malleable-iron top and bottom retainers and a primed paint finish.
    1. Provide keyed removable feature where specified in the Hardware Sets.
    2. Provide stabilizers and mounting brackets as required.
    3. Provide electrical quick connection wiring options as specified in the hardware sets.
    4. Acceptable Manufacturers:
        a. Corbin Russwin Hardware (RU) - 700/900 Series.
        b. Sargent Manufacturing (SA) - 980S Series.

2.11 INTEGRATED WIEGAND OUTPUT EXIT DEVICES – MULTI-CLASS READER

A. Integrated Wiegand Output Multi-Class Exit Hardware: Wiegand output ANSI 156.3 Grade 1 rim, mortise, and vertical rod exit device hardware with integrated proximity card reader, latchbolt and touchbar monitoring, and request-to-exit signaling, in one complete unit. Hard wired, solenoid driven locking/unlocking control of the lever handle exit trim with 3/4" throw latch bolt. U.L listed and labeled for either panic or "fire exit hardware" for use on up to 3 hour fire rated openings. Available with or without keyed high security cylinder override.
   1. Open architecture, hard wired platform supports centralized control of locking units with new or existing Wiegand compatible access control systems. Inside push bar (request-to-exit) signaling and door position (open/closed status) monitoring (via separately connected DPS).
   2. Integrated reader supports the following credentials:
      a. 125kHz proximity credentials: HID, AWID, Indala, and EM4102.
      b. 13.56 MHz proximity credentials: HID iClass, HID iClass SE, SE for MIFARE Classic, DESFire EV1.
   3. 12VDC external power supply required for reader. 24VDC required for solenoid operated exit trim. Fail safe or fail secure options.
   4. Installation requires only one cable run from the exit hardware to the access control panel without requirements for additional proprietary lock panel interface boards or modules.
   5. Competitor Alternates Allowed Option>Installation to include manufacturer's access control panel interface board or module where required for Wiegand output protocol.
   6. Acceptable Manufacturers:
      a. Corbin Russwin (RU) – ED5000 SE-LP10 Series.
      b. Sargent Manufacturing (SA) – M1 80 Series.

2.12 DOOR CLOSERS

A. All door closers specified herein shall meet or exceed the following criteria:
   1. General: Door closers to be from one manufacturer, matching in design and style, with the same type door preparations and templates regardless of application or spring size. Closers to be non-handed with full sized covers including installation and adjusting information on inside of cover.
   2. Standards: Closers to comply with UL-10C for Positive Pressure Fire Test and be U.L. listed for use of fire rated doors.
   3. Cycle Testing: Provide closers which have surpassed 15 million cycles in a test witnessed and verified by UL.
   4. Size of Units: Comply with manufacturer's written recommendations for sizing of door closers depending on size of door, exposure to weather, and anticipated frequency of use. Where closers are indicated for doors required to be accessible to the physically handicapped, provide units complying with ANSI ICC/A117.1.
   5. Closer Arms: Provide heavy duty, forged steel closer arms unless otherwise indicated in Hardware Sets.
   6. Closers shall not be installed on exterior or corridor side of doors; where possible install closers on door for optimum aesthetics.
   7. Closer Accessories: Provide door closer accessories including custom templates, special mounting brackets, spacers and drop plates as required for proper installation. Provide through-bolt and security type fasteners as specified in the hardware sets.

B. Door Closers, Surface Mounted (Heavy Duty): ANSI/BHMA A156.4, Grade 1 surface mounted, heavy duty door closers with complete spring power adjustment, sizes 1 thru 6; and fully operational adjustable according to door size, frequency of use, and opening force. Closers to be rack and pinion type, one piece cast iron or aluminum alloy body construction, with adjustable backcheck and separate non-critical valves for closing sweep and latch speed control. Provide non-handed units standard.
   1. Acceptable Manufacturers:
      a. Corbin Russwin Hardware (RU) – DC6000 Series.
      b. Sargent Manufacturing (SA) - 351 Series.
      c. Norton Door Controls (NO) - 7500 Series.

C. Door Closers, Surface Mounted (Cam Action): ANSI/BHMA 156.4, Grade 1 certified surface mounted, high efficiency door closers with complete spring power adjustment, sizes 1 thru 6; and fully operational adjustable according to door size, frequency of use, and opening force. Closers to be of the cam and roller design, one piece cast aluminum silicon alloy body with adjustable backcheck and independently controlled valves for closing sweep and latch speed.
   1. Acceptable Manufacturers:
      a. Corbin Russwin (RU) - DC5000 Series.
      b. Norton Door Controls (NO) - 2800ST Series.
      c. Sargent Manufacturing (SA) - 422 Series.

2.13 SURFACE MOUNTED CLOSER HOLDERS

A. Electromagnetic Door Holders: Certified ANSI A156.15 electromagnetic door holder/releases with a minimum 20 to 40 pounds holding power and single coil construction able to accommodate.12VDC, 24VAC, 24VDC and 120VAC. Coils to be independently wound, employing an integral fuse and armatures to include a positive release button.
   1. Acceptable Manufacturers:
      a. Rixson (RF) - 980/990 Series.
      b. Sargent Manufacturing (SA) - 1560 Series.

2.14 ARCHITECTURAL TRIM

A. Door Protective Trim
   1. General: Door protective trim units to be of type and design as specified below or in the Hardware Sets.
   2. Size: Fabricate protection plates (kick, armor, or mop) not more than 2" less than door width (LDW) on stop side of single doors and 1” LDW on stop side of pairs of doors, and not more than 1" less than door width on pull side. Coordinate and provide proper width and height as required where conflicting hardware dictates. Height to be as specified in the Hardware Sets.
   3. Where plates are applied to fire rated doors with the top of the plate more than 16” above the bottom of the door, provide plates complying with NFPA 80. Consult manufacturer’s catalog and template book for specific requirements for size and applications.
   4. Protection Plates: ANSI/BHMA A156.6 certified protection plates (kick, armor, or mop), fabricated from the following:
      a. Stainless Steel: 300 grade, 050-inch thick.
   5. Options and fasteners: Provide manufacturer's designated fastener type as specified in the Hardware Sets. Provide countersunk screw holes.

6. Acceptable Manufacturers:
   a. Hiawatha, Inc. (HI).
   b. Rockwood Products; ASSA ABLOY Architectural Door Accessories (RO).
   c. Trimco (TC).

2.15 DOOR STOPS AND HOLDERS

A. General: Door stops and holders to be of type and design as specified below or in the Hardware Sets.

B. Door Stops and Bumpers: ANSI/BHMA A156.16, Grade 1 certified door stops and wall bumpers. Provide wall bumpers, either convex or concave types with anchorage as indicated, unless floor or other types of door stops are specified in Hardware Sets. Do not mount floor stops where they will impede traffic. Where floor or wall bumpers are not appropriate, provide overhead type stops and holders.
   1. Acceptable Manufacturers:
      a. Hiawatha, Inc. (HI).
      b. Rockwood Products; ASSA ABLOY Architectural Door Accessories (RO).
      c. Trimco (TC).

C. Overhead Door Stops and Holders: ANSI/BHMA A156.6, Grade 1 certified overhead stops and holders to be surface or concealed types as indicated in Hardware Sets. Track, slide, arm and jamb bracket to be constructed of extruded bronze and shock absorber spring of heavy tempered steel. Provide non-handed design with mounting brackets as required for proper operation and function.
   1. Acceptable Manufacturers:
      a. Rixson Door Controls (RF).
      b. Rockwood Products; ASSA ABLOY Architectural Door Accessories (RO).
      c. Sargent Manufacturing (SA).

2.16 ARCHITECTURAL SEALS

A. General: Thresholds, weatherstripping, and gasket seals to be of type and design as specified below or in the Hardware Sets. Provide continuous weatherstrip gasketing on exterior doors and provide smoke, light, or sound gasketing on interior doors where indicated. At exterior applications provide non-corrosive fasteners and elsewhere where indicated.

B. Smoke Labeled Gasketing: Assemblies complying with NFPA 105 that are listed and labeled by a testing and inspecting agency acceptable to authorities having jurisdiction, for smoke control ratings indicated, based on testing according to UL 1784.
   1. Provide smoke labeled perimeter gasketing at all smoke labeled openings.

C. Fire Labeled Gasketing: Assemblies complying with NFPA 80 that are listed and labeled by a testing and inspecting agency acceptable to authorities having jurisdiction, for fire ratings indicated, based on testing according to UL-10C.
   1. Provide intumescent seals as indicated to meet UL10C Standard for Positive Pressure Fire Tests of Door Assemblies, and NPFA 252, Standard Methods of Fire Tests of Door Assemblies.

D. Sound-Rated Gasketing: Assemblies that are listed and labeled by a testing and inspecting agency, for sound ratings indicated.

E. Replaceable Seal Strips: Provide only those units where resilient or flexible seal strips are easily replaceable and readily available from stocks maintained by manufacturer.

F. Acceptable Manufacturers:
   1. National Guard Products (NG).
   2. Pemko Products; ASSA ABLOY Architectural Door Accessories (PE).
   3. Reese Enterprises, Inc. (RE).

2.17 ELECTRONIC ACCESSORIES

A. Door Position Switches: Door position magnetic reed contact switches specifically designed for use in commercial door applications. On recessed models the contact and magnetic housing snap-lock into a 1" diameter hole. Surface mounted models include wide gap distance design complete with armored flex cabling. Provide SPDT, N/O switches with optional Rare Earth Magnet installation on steel doors with flush top channels.
   1. Acceptable Manufacturers:
      a. Securitron (SU) - DPS Series.
      b. Sentrol - 1076D.

B. Wiegand Test Unit: Test unit verifies proper Wiegand output integrated card reader lock installation in the field by testing for proper wiring, card reader data integrity, and lock functionality including lock/unlock, door position, and request-to-exit status. 12 or 24VDC voltage adjustable operating as Fail Safe or Fail Secure.
   1. Acceptable Manufacturers:
      a. Corbin Russwin Hardware (RU) – WT2 Wiegand Test Unit.
      b. Sargent Manufacturing (SA) – WT2 Wiegand Test Unit.

C. Power Supplies: Provide Nationally Recognized Testing Laboratory Listed 12VDC or 24VDC (field selectable) filtered and regulated power supplies. Include battery backup option with integral battery charging capability in addition to operating the DC load in event of line voltage failure. Provide the least number of units, at the appropriate amperage level, sufficient to exceed the required total draw for the specified electrified hardware and access control equipment.
   1. Acceptable Manufacturers:
      a. Corbin Russwin Hardware (RU) - BPS Series.
      b. Sargent Manufacturing (SA) - 3500 Series.
      c. Securitron (SU) - BPS Series.

2.18 FABRICATION

A. Fasteners: Provide door hardware manufactured to comply with published templates generally prepared for machine, wood, and sheet metal screws. Provide screws according to manufacturers recognized installation standards for application intended.

2.19 FINISHES

A. Standard: Designations used in the Hardware Sets and elsewhere indicate hardware finishes complying with ANSI/BHMA A156.18, including coordination with traditional U.S. finishes indicated by certain manufacturers for their products.

B. Provide quality of finish, including thickness of plating or coating (if any), composition, hardness, and other qualities complying with manufacturer's standards, but in no case less than specified by referenced standards for the applicable units of hardware

C. Protect mechanical finishes on exposed surfaces from damage by applying a strippable, temporary protective covering before shipping.

PART 3 - EXECUTION

3.1 EXAMINATION

A. Examine scheduled openings, with Installer present, for compliance with requirements for installation tolerances, labeled fire door assembly construction, wall and floor construction, and other conditions affecting performance.

B. Notify architect of any discrepancies or conflicts between the door schedule, door types, drawings and scheduled hardware. Proceed only after such discrepancies or conflicts have been resolved in writing.

3.2 PREPARATION

A. Hollow Metal Doors and Frames: Comply with ANSI/DHI A115 series.

B. Wood Doors: Comply with ANSI/DHI A115-W series.

3.3 INSTALLATION

A. Install each item of mechanical and electromechanical hardware and access control equipment to comply with manufacturer's written instructions and according to specifications.
   1. Installers are to be trained and certified by the manufacturer on the proper installation and adjustment of fire, life safety, and security products including: hanging devices; locking devices; closing devices; and seals.

B. Mounting Heights: Mount door hardware units at heights indicated in following applicable publications, unless specifically indicated or required to comply with governing regulations:
   1. Standard Steel Doors and Frames: DHI's "Recommended Locations for Architectural Hardware for Standard Steel Doors and Frames."
   2. Wood Doors: DHI WDHS.3, "Recommended Locations for Architectural Hardware for Wood Flush Doors."
   3. Where indicated to comply with accessibility requirements, comply with ANSI A117.1 "Accessibility Guidelines for Buildings and Facilities."

4. Provide blocking in drywall partitions where wall stops or other wall mounted hardware is located.

C. Integrated Wiegand access control products are required to be installed through current members of the ASSA ABLOY "Certified Integrator" (CI) program.

D. Retrofitting: Install door hardware to comply with manufacturer's published templates and written instructions. Where cutting and fitting are required to install door hardware onto or into surfaces that are later to be painted or finished in another way, coordinate removal, storage, and reinstallation of surface protective trim units with finishing work specified in Division 9 Sections. Do not install surface-mounted items until finishes have been completed on substrates involved.

E. Thresholds: Set thresholds for exterior and acoustical doors in full bed of sealant complying with requirements specified in Division 7 Section "Joint Sealants."

F. Storage: Provide a secure lock up for hardware delivered to the project but not yet installed. Control the handling and installation of hardware items so that the completion of the work will not be delayed by hardware losses before and after installation.

3.4 FIELD QUALITY CONTROL

A. Field Inspection: Supplier will perform a final inspection of installed door hardware and state in report whether work complies with or deviates from requirements, including whether door hardware is properly installed, operating and adjusted.

3.5 ADJUSTING

A. Initial Adjustment: Adjust and check each operating item of door hardware and each door to ensure proper operation or function of every unit. Replace units that cannot be adjusted to operate as intended. Adjust door control devices to compensate for final operation of heating and ventilating equipment and to comply with referenced accessibility requirements.

3.6 CLEANING AND PROTECTION

A. Protect all hardware stored on construction site in a covered and dry place. Protect exposed hardware installed on doors during the construction phase. Install any and all hardware at the latest possible time frame.

B. Clean adjacent surfaces soiled by door hardware installation.

C. Clean operating items as necessary to restore proper finish. Provide final protection and maintain conditions that ensure door hardware is without damage or deterioration at time of owner occupancy.

3.7 DEMONSTRATION

A. Instruct Owner's maintenance personnel to adjust, operate, and maintain mechanical and electromechanical door hardware.

END OF SECTION

SECTION 08 8000
GLAZING

PART 1 GENERAL

1.01 SECTION INCLUDES

A. Insulating glass units.

B. Glazing units.

C. Glazing compounds and accessories.

1.02 RELATED REQUIREMENTS

A. Section 08 1113 - Hollow Metal Doors and Frames: Glazed lites in doors and borrowed lites.

B. Section 08 1416 - Flush Wood Doors: Glazed lites in doors.

C. Section 08 4313 - Aluminum-Framed Storefronts: Glazing furnished as part of storefront assembly.

D. Section 08 4413 - Glazed Aluminum Curtain Walls: Glazing furnished as part of wall assembly.

E. Section 08 5113 - Aluminum Windows: Glazing furnished by window manufacturer.

1.03 REFERENCE STANDARDS

A. 16 CFR 1201 - Safety Standard for Architectural Glazing Materials; current edition.

B. ANSI Z97.1 - American National Standard for Safety Glazing Materials Used in Buildings, Safety Performance Specifications and Methods of Test; 2010.

C. ASTM C864 - Standard Specification for Dense Elastomeric Compression Seal Gaskets, Setting Blocks, and Spacers; 2005 (Reapproved 2015).

D. ASTM C920 - Standard Specification for Elastomeric Joint Sealants; 2014a.

E. ASTM C1036 - Standard Specification for Flat Glass; 2011.

F. ASTM C1048 - Standard Specification for Heat-Strengthened and Fully Tempered Flat Glass; 2012.

G. ASTM C1193 - Standard Guide for Use of Joint Sealants; 2016.

H. ASTM C1376 - Standard Specification for Pyrolytic and Vacuum Deposition Coatings on Flat Glass; 2015.

I. ASTM E119 - Standard Test Methods for Fire Tests of Building Construction and Materials; 2016a.

J. ASTM E1300 - Standard Practice for Determining Load Resistance of Glass in Buildings; 2016.

K. ASTM E2190 - Standard Specification for Insulating Glass Unit Performance and Evaluation; 2010.

L. GANA (SM) - GANA Sealant Manual; 2008.

M. ICC (IBC) - International Building Code; 2015.

N. IGMA TM-3000 - North American Glazing Guidelines for Sealed Insulating Glass Units for Commercial & Residential Use; 1990 (2004).

O. ITS (DIR) - Directory of Listed Products; current edition.

P. NFPA 252 - Standard Methods of Fire Tests of Door Assemblies; 2012.

Q. NFPA 257 - Standard on Fire Test for Window and Glass Block Assemblies; 2012.

R. NFRC 100 - Procedure for Determining Fenestration Product U-factors; 2014.

S. NFRC 200 - Procedure for Determining Fenestration Product Solar Heat Gain Coefficient and Visible Transmittance at Normal Incidence; 2014.

T. NFRC 300 - Test Method for Determining the Solar Optical Properties of Glazing Materials and Systems; 2014.

U. UL (DIR) - Online Certifications Directory; current listings at database.ul.com.

V. UL 9 - Standard for Fire Tests of Window Assemblies; Current Edition, Including All Revisions.

W. UL 10B - Standard for Fire Tests of Door Assemblies; Current Edition, Including All Revisions.

X. UL 10C - Standard for Positive Pressure Fire Tests of Door Assemblies; Current Edition, Including All Revisions.

Y. UL 263 - Standard for Fire Tests of Building Construction and Materials; Current Edition, Including All Revisions.

1.04 SUBMITTALS

A. Product Data on Insulating Glass Unit and Glazing Unit Glazing Types: Provide structural, physical and environmental characteristics, size limitations, special handling and installation requirements.

B. Product Data on Glazing Compounds and Accessories: Provide chemical, functional, and environmental characteristics, limitations, special application requirements. Identify available colors.

C. Samples: Submit two samples 12 by 12 inch in size of glass units.

D. Certificate: Certify that products of this section meet or exceed specified requirements.

E. Warranty Documentation: Submit manufacturer warranty and ensure that forms have been completed in Owner's name and registered with manufacturer.

1.05 QUALITY ASSURANCE

A. Perform Work in accordance with IGMA TM-3000 for glazing installation methods. Maintain one copy on site.

B. Manufacturer Qualifications: Company specializing in manufacturing the products specified in this section with minimum three years of documented experience.

C. Installer Qualifications: Company specializing in performing work of the type specified and with at least three years documented experience.

1.06 FIELD CONDITIONS

A. Do not install glazing when ambient temperature is less than 40 degrees F.

B. Maintain minimum ambient temperature before, during and 24 hours after installation of glazing compounds.

1.07 WARRANTY

A. See Section 01 7800 - Closeout Submittals, for additional warranty requirements.

B. Insulating Glass Units: Provide a ten (10) year manufacturer warranty to include coverage for seal failure, interpane dusting or misting, including replacement of failed units.

C. Laminated Glass: Provide a ten (10) year manufacturer warranty to include coverage for delamination, including replacement of failed units.

PART 2 PRODUCTS

2.01 MANUFACTURERS

A. Float Glass Manufacturers:
   1. Guardian Industries Corp: www.sunguardglass.com.
   2. Pilkington North America Inc: www.pilkington.com/na.
   3. PPG Industries, Inc: www.ppgideascapes.com.

2.02 PERFORMANCE REQUIREMENTS - EXTERIOR GLAZING ASSEMBLIES

A. Provide type and thickness of exterior glazing assemblies to support assembly dead loads, and to withstand live loads caused by positive and negative wind pressure acting normal to plane of glass.
   1. Comply with ASTM E1300 for design load resistance of glass type, thickness, dimensions, and maximum lateral deflection of supported glass.
   2. Provide glass edge support system sufficiently stiff to limit the lateral deflection of supported glass edges to less than 1/175 of their lengths under specified design load.
   3. Glass thicknesses listed are minimum.

B. Vapor Retarder and Air Barrier Seals: Provide completed assemblies that maintain continuity of building enclosure vapor retarder and air barrier.
   1. In conjunction with vapor retarder and joint sealer materials described in other sections.

C. Thermal and Optical Performance: Provide glass products with performance properties as indicated. Performance properties are in accordance with manufacturer's published data as determined with the following procedures and/or test methods:
   1. Center of Glass U-Value: Comply with NFRC 100 using Lawrence Berkeley National Laboratory (LBNL) WINDOW 6.3 computer program.
   2. Center of Glass Solar Heat Gain Coefficient (SHGC): Comply with NFRC 200 using Lawrence Berkeley National Laboratory (LBNL) WINDOW 6.3 computer program.
   3. Solar Optical Properties: Comply with NFRC 300 test method.

2.03 GLASS MATERIALS

A. Float Glass: Provide float glass based glazing unless noted otherwise.
   1. Annealed Type: ASTM C1036, Type I - Transparent Flat, Class 1 - Clear, Quality-Q3.
   2. Heat-Strengthened and Fully Tempered Types: ASTM C1048, Kind HS and FT.
   3. Fully Tempered Safety Glass: Complies with ANSI Z97.1 and 16 CFR 1201 criteria.
   4. Impact Resistant Safety Glass: Complies with ANSI Z97.1 and 16 CFR 1201 criteria; Class B/Category I.
   5. Thicknesses: As indicated; provide greater thickness as required for exterior glazing wind load design.

2.04 INSULATING GLASS UNITS

A. Insulating Glass Units: Types as indicated.
   1. Durability: Certified by an independent testing agency to comply with ASTM E2190.
   2. Coated Glass: Comply with requirements of ASTM C1376 for pyrolytic (hard-coat) or magnetic sputter vapor deposition (soft-coat) type coatings on flat glass; coated vision glass, Kind CV; coated overhead glass, Kind CO; or coated spandrel glass, Kind CS.
   3. Warm-Edge Spacers: Low conductivity thermoplastic and stainless steel.
      a. Spacer Width: As required for specified insulating glass unit.

4. Spacer Color: Dark gray.
5. Edge Seal:
   a. Dual-Sealed System: Provide polyisobutylene sealant as primary seal applied between spacer and glass panes, and silicone or polysulfide sealant as secondary seal applied around perimeter.
6. Color: Black.
7. Purge interpane space with dry air, hermetically sealed.

2.05 BASIS OF DESIGN - INSULATING GLASS UNITS

A. Type 1 - Vision glazing, with Low-E coating.
   1. Applications: Exterior insulating glass glazing unless otherwise indicated.
   2. Space between lites filled with argon.
   3. Total Thickness: 1 inch.
   4. Thermal Transmittance (U-Value): 0.24, nominal.
   5. Visible Light Transmittance (VLT): 74 percent, nominal.
   6. Solar Heat Gain Coefficient (SHGC): 0.41, nominal.
   7. Glazing Method: Dry glazing method, gasket glazing.
   8. Basis of Design - Guardian Glass, LLC: www.guardianglass.com.
   9. Outboard Lite: Annealed float glass, 1/4 inch thick, minimum.
      a. Low-E Coating: SunGuard SNX 62/27 on #2 surface.
   10. Inboard Lite: Annealed float glass, 1/4 inch thick.
      a. Coating: No coating on inboard lite.
      b. Tint: Clear.

B. Type 1A -Sealed Insulating Glass Units: Safety glazing:
   1. Applications: Provide this type of glazing in the following locations:
      a. Glazed lites in exterior doors.
      b. Glazed sidelights and panels next to doors.
      c. Other locations required by applicable federal, state, and local codes and regulations.
      d. Other locations indicated on the drawings.
   2. Type: Same as Type 1 except use fully tempered float glass for both outboard and inboard lites.

C. Type 1B -Sealed Insulating Glass Units: Obscure glazing:
   1. Applications: Provide this type of glazing in the following locations:
      a. Exterior windows in toilet, bathing, and shower rooms.
      b. Other locations indicated on the drawings.
   2. Type: Same asType 1 except use patterned obscure glass for inboard lite.
      a. Pattern: No. 62

D. Type 2 - Spandrel glazing.
   1. Applications: Exterior spandrel glazing unless otherwise indicated.
   2. Space between lites filled with argon.
   3. Basis of Design - Guardian Glass, LLC: www.guardianglass.com.
   4. Outboard Lite: Heat-strengthened float glass, 1/4 inch thick, minimum.
      a. Tint: Clear.
      b. Coating: Same as on vision units, on #2 surface.
   5. Inboard Lite: Fully tempered float glass, 1/4 inch thick.
      a. Tint: Clear.
      b. Opacifier: Ceramic frit, on #3 surface.

c. Opacifier Color: as selected by Architect from manufacturer's full range.
d. Coating: OpaciCoat 300.
6. Total Thickness: 1 inch.

E. Other Manufacturers: Provide either the product identified as "Basis of Design" or an equivalent product of another acceptable manufacturer.

F. Substitution Procedures: See Section 01 6000 - Product Requirements.
1. For any product not identified as "Basis of Design", submit information as specified for substitutions.

2.06 GLAZING UNITS

A. Type 3 - Monolithic Interior Vision Glazing:
1. Applications: Interior glazing unless otherwise indicated.
2. Glass Type: Fully tempered float glass.
3. Tint: Clear.
4. Thickness: 1/4 inch, nominal.
5. Locations: Interior vision panels, doors and sidelites.

B. Type 4A - Fire-Resistance-Rated Glazing: Type, thickness, and configuration of glazing that contains flame, smoke, and blocks radiant heat, as required to achieve indicated fire-rating period of 90 minutes.
1. Applications:
a. Glazing in fire-rated door assembly.
b. Other locations as indicated on drawings.
2. Provide products listed by ITS (DIR) or UL (DIR) and approved by authorities having jurisdiction.
3. Safety Glazing Certification: 16 CFR 1201 Category II.
4. Fire-Rating Period: 90 minutes.
5. Nominal Thickness: 1-1/2 inch.
6. Markings for Fire-Resistance-Rated Glazing Assemblies: Provide permanent markings on fire-resistance-rated glazing in compliance with ICC (IBC), local building code, and authorities having jurisdiction.
a. "W" - meets wall assembly criteria of ASTM E119 or UL 263 fire test standards.
b. "D" - meets fire door assembly criteria of NFPA 252, UL 10B, or UL 10C fire test standards.
c. "H" - meets fire door assembly hose stream test of NFPA 252, UL 10B, or UL 10C fire test standards.
d. "T" - meets temperature rise of not more than 450 degrees F above ambient at end of 30 minutes fire exposure in accordance with NFPA 252, UL 10B, or UL 10C fire test standards.
e. "XXX" - placeholder that represents fire-rating period, in minutes.
7. Products:
a. SAFTIFIRST, a division of O'Keeffe's Inc; SuperLite II-XL 90: www.safti.com/#sle.
b. Technical Glass Products; Pilkington Pyrostop 90: www.fireglass.com/#sle.
c. Substitutions: Refer to Section 01 6000 - Product Requirements.

C. Type 4B - Fire-Resistance-Rated Glazing: Type, thickness, and configuration of glazing that contains flame, smoke, and blocks radiant heat, as required to achieve indicated fire-rating period of 60 minutes.
1. Applications:
a. Glazing in fire-rated door assembly.

b. Glazing in fire-rated window assembly.
c. Other locations as indicated on drawings.

2. Provide products listed by ITS (DIR) or UL (DIR) and approved by authorities having jurisdiction.
3. Safety Glazing Certification: 16 CFR 1201 Category II.
4. Fire-Rating Period: 60 minutes.
5. Nominal Thickness: 7/8 inch.
6. Markings for Fire-Resistance-Rated Glazing Assemblies: Provide permanent markings on fire-resistance-rated glazing in compliance with ICC (IBC), local building code, and authorities having jurisdiction.
   a. "W" - meets wall assembly criteria of ASTM E119 or UL 263 fire test standards.
   b. "D" - meets fire door assembly criteria of NFPA 252, UL 10B, or UL 10C fire test standards.
   c. "H" - meets fire door assembly hose stream test of NFPA 252, UL 10B, or UL 10C fire test standards.
   d. "T" - meets temperature rise of not more than 450 degrees F above ambient at end of 30 minutes fire exposure in accordance with NFPA 252, UL 10B, or UL 10C fire test standards.
   e. "XXX" - placeholder that represents fire-rating period, in minutes.
7. Products:
   a. SAFTIFIRST, a division of O'Keeffe's Inc; SuperLite II-XL 60: www.safti.com/#sle.
   b. Technical Glass Products; Pilkington Pyrostop 60: www.fireglass.com/#sle.
   c. Substitutions: Refer to Section 01 6000 - Product Requirements.

D. Type 5A - Fire-Protection-Rated Glazing: Type, thickness, and configuration of glazing that contains flame, smoke, and does not block radiant heat, as required to achieve indicated fire-rating period of 60 minutes.
1. Applications:
   a. Glazing in fire-rated door assembly.
   b. Other locations as indicated on drawings.
2. Provide products listed by ITS (DIR) or UL (DIR) and approved by authorities having jurisdiction.
3. Safety Glazing Certification: 16 CFR 1201 Category II.
4. Fire-Rating Period: 60 minutes.
5. Markings for Fire-Protection-Rated Glazing Assemblies: Provide permanent markings on fire-protection-rated glazing in compliance with ICC (IBC), local building code, and authorities having jurisdiction
   a. "D" - meets fire door assembly criteria of NFPA 252, UL 10B, or UL 10C fire test standards.
   b. "OH" - meets fire window assembly criteria including hose stream test of NFPA 257, or UL 9 fire test standards.
   c. "H" - meets fire door assembly hose stream test of NFPA 252, UL 10B, or UL 10C fire tests standards.
   d. "XXX" - placeholder that represents fire-rating period, in minutes.
6. Products:
   a. SCHOTT North America Inc; Pyran Platinum L: www.us.schott.com/#sle.
   b. Technical Glass Products; Firelite Plus: www.fireglass.com/#sle.
   c. Substitutions: Refer to Section 01 6000 - Product Requirements.

E. Type 5B - Fire-Protection-Rated Glazing: Type, thickness, and configuration of glazing that contains flame, smoke, and does not block radiant heat, as required to achieve indicated fire-rating period of 45 minutes.
   1. Applications:
      a. Glazing in fire-rated door assembly.
      b. Glazing in fire-rated window assembly.
      c. Other locations as indicated on drawings.
   2. Provide products listed by ITS (DIR) or UL (DIR) and approved by authorities having jurisdiction.
   3. Safety Glazing Certification: 16 CFR 1201 Category II.
   4. Fire-Rating Period: 45 minutes.
   5. Markings for Fire-Protection-Rated Glazing Assemblies: Provide permanent markings on fire-protection-rated glazing in compliance with ICC (IBC), local building code, and authorities having jurisdiction
      a. "D" - meets fire door assembly criteria of NFPA 252, UL 10B, or UL 10C fire test standards.
      b. "OH" - meets fire window assembly criteria including hose stream test of NFPA 257, or UL 9 fire test standards.
      c. "H" - meets fire door assembly hose stream test of NFPA 252, UL 10B, or UL 10C fire tests standards.
      d. "XXX" - placeholder that represents fire-rating period, in minutes.
   6. Products:
      a. SCHOTT North America Inc; Pyran Platinum L: www.us.schott.com/#sle.
      b. Technical Glass Products; Firelite Plus: www.fireglass.com/#sle.
      c. Substitutions: Refer to Section 01 6000 - Product Requirements.

2.07 GLAZING COMPOUNDS

A. Butyl Sealant: Single component; ASTM C920, Grade NS, Class 12-1/2, Uses M and A, Shore A hardness of 10 to 20; black color.

B. Polysulfide Sealant: Two component; chemical curing, non-sagging type; ASTM C920, Type M, Grade NS, Class 25, Uses M, A, and G; with cured Shore A hardness range of 15 to 25; color as selected.

C. Silicone Sealant: Single component; neutral curing; capable of water immersion without loss of properties; non-bleeding, non-staining; ASTM C920, Type S, Grade NS, Class 25, Uses M, A, and G; with cured Shore A hardness range of 15 to 25; clear color.

2.08 ACCESSORIES

A. Setting Blocks: Silicone, with 80 to 90 Shore A durometer hardness; ASTM C864 Option II. Length of 0.1 inch for each square foot of glazing or minimum 4 inch x width of glazing rabbet space minus 1/16 inch x height to suit glazing method and pane weight and area.

B. Spacer Shims: Neoprene, 50 to 60 Shore A durometer hardness; ASTM C864 Option II. Minimum 3 inch long x one half the height of the glazing stop x thickness to suit application, self adhesive on one face.

C. Glazing Tape, Back Bedding Mastic Type: Preformed, butyl-based, 100 percent solids compound with integral resilient spacer rod applicable to application indicated; 5 to 30 cured Shore A durometer hardness; coiled on release paper; black color.
   1. Width: As required for application.
   2. Thickness: As required for application.

D. Glazing Gaskets: Resilient silicone extruded shape to suit glazing channel retaining slot; color black.

PART 3 EXECUTION

3.01 VERIFICATION OF CONDITIONS

A. Verify that openings for glazing are correctly sized and within tolerances, including those for size, squareness, and offsets at corners.

B. Verify that surfaces of glazing channels or recesses are clean, free of obstructions that may impede moisture movement, weeps are clear, and support framing is ready to receive glazing system.

C. Verify that sealing between joints of glass framing members has been completed effectively.

D. Proceed with glazing system installation only after unsatisfactory conditions have been corrected.

3.02 PREPARATION

A. Clean contact surfaces with appropriate solvent and wipe dry immediately before glazing. Remove coatings that are not tightly bonded to substrates.

B. Seal porous glazing channels or recesses with substrate compatible primer or sealer.

C. Prime surfaces scheduled to receive sealant where required for proper sealant adhesion.

3.03 INSTALLATION, GENERAL

A. Install glazing in compliance with written instructions of glass, gaskets, and other glazing material manufacturers, unless more stringent requirements are indicated, including those in glazing referenced standards.

B. Install glazing sealants in accordance with ASTM C1193, GANA (SM), and manufacturer's instructions.

C. Do not exceed edge pressures around perimeter of glass lites as stipulated by glass manufacturer.

D. Set glass lites of system with uniform pattern, draw, bow, and similar characteristics.

E. Set glass lites in proper orientation so that coatings face exterior or interior as indicated.

F. Prevent glass from contact with any contaminating substances that may be the result of construction operations such as, and not limited to the following; weld splatter, fire-safing, plastering, mortar droppings, etc.

3.04 INSTALLATION - DRY GLAZING METHOD (GASKET GLAZING)

A. Application - Exterior and/or Interior Glazed: Set glazing infills from either the exterior or the interior of the building.

B. Place setting blocks at 1/4 points with edge block no more than 6 inch from corners.

C. Rest glazing on setting blocks and push against fixed stop with sufficient pressure on gasket to attain full contact.

D. Install removable stops without displacing glazing gasket; exert pressure for full continuous contact.

3.05 INSTALLATION - PRESSURE GLAZED SYSTEMS

A. Application - Exterior Glazed: Set glazing infills from the exterior of the building.

B. Place setting blocks at 1/4 points with edge block no more than 6 inch from corners.

C. Rest glazing on setting blocks and push against fixed stop with sufficient pressure on gasket to attain full contact.

D. Install pressure plates without displacing glazing gasket; exert pressure for full continuous contact.

E. Install cover plate.

3.06 FIELD QUALITY CONTROL

A. Glass and Glazing product manufacturers to provide field surveillance of the installation of their products.

B. Monitor and report installation procedures and unacceptable conditions.

3.07 CLEANING

A. Remove excess glazing materials from finish surfaces immediately after application using solvents or cleaners recommended by manufacturers.

B. Remove non-permanent labels immediately after glazing installation is complete.

C. Clean glass and adjacent surfaces after sealants are fully cured.

D. Clean glass on both exposed surfaces not more than 4 days prior to Date of Substantial Completion in accordance with glass manufacturer's written recommendations.

3.08 PROTECTION

A. Remove and replace glass that is damaged during construction period prior to Date of Substantial Completion.

END OF SECTION

SECTION 08 9100
LOUVERS

PART 1 GENERAL

1.01 SECTION INCLUDES

A. Louvers, frames, and accessories.

1.02 RELATED REQUIREMENTS

A. Section 07 6200 - Sheet Metal Flashing and Trim.

B. Section 07 9200 - Joint Sealants: Sealing joints between frames and adjacent construction.

1.03 REFERENCE STANDARDS

A. AAMA 2605 - Voluntary Specification, Performance Requirements and Test Procedures for Superior Performing Organic Coatings on Aluminum Extrusions and Panels (with Coil Coating Appendix); 2013.

B. AMCA 511 - Certified Ratings Program for Air Control Devices; 2010.

1.04 SUBMITTALS

A. Product Data: Provide data describing design characteristics, maximum recommended air velocity, design free area, materials and finishes.

B. Shop Drawings: Indicate louver layout plan and elevations, opening and clearance dimensions, tolerances; head, jamb and sill details; blade configuration, screens, blankout areas required, and frames.

C. Samples: Submit two samples 2 by 2 inches in size illustrating finish and color of exterior and interior surfaces.

D. Test Reports: Independent agency reports showing compliance with specified performance criteria.

E. Manufacturer's Certificate: Certify that products meet or exceed specified requirements.

1.05 QUALITY ASSURANCE

A. Manufacturer Qualifications: Company specializing in manufacturing products of the type specified in this section, with minimum three years of documented experience.

B. Installer Qualifications: Company specializing in performing work of type specified and with at least three years of documented experience.

1.06 WARRANTY

A. Provide twenty year manufacturer warranty against distortion, metal degradation, and failure of connections.

1. Finish: Include coverage against degradation of exterior finish.

PART 2 PRODUCTS

2.01 MANUFACTURERS

A. Louvers:

1. Airolite Company, LLC; Model SCH501: www.airolite.com.
2. Construction Specialties, Inc; Model RSH-5700: www.c-sgroup.com.
3. Substitutions: See Section 01 6000 - Product Requirements.

2.02 LOUVERS

A. Louvers: Factory fabricated and assembled, complete with frame, mullions, and accessories; AMCA Certified in accordance with AMCA 511.

B. Stationary Storm-Resistant Louvers: Horizontal blade, extruded aluminum construction, with intermediate mullions matching frame.
   1. Free Area: 43%, minimum.
   2. Blades: Airfoil-shaped.
   3. Frame: 5 inches deep, channel profile; corner joints mitered and, with continuous recessed caulking channel each side.
   4. Aluminum Thickness: Frame 12 gage, 0.0808 inch minimum; blades 12 gage, 0.0808 inch minimum.
   5. Aluminum Finish: Superior performing organic coatings; finish welded units after fabrication.

2.03 MATERIALS

A. Extruded Aluminum: ASTM B221 (ASTM B221M).

2.04 FINISHES

A. Superior Performing Organic Coatings: AAMA 2605 multiple coat, thermally cured polyvinylidene fluoride system.
   1. Polyvinylidene fluoride (PVDF) multi-coat thermoplastic fluoropolymer coating system, including minimum 70 percent PVDF color topcoat and minimum total dry film thickness of 0.9 mil; color and gloss as indicated on drawings.

2.05 ACCESSORIES

A. Blank-Off Panels: Aluminum face and back sheets, polyisocyanurate foam core, 1-1/2 inch thick, painted black on exterior side; provide where duct connected to louver is smaller than louver frame, sealing off louver area outside duct.

B. Bird Screen: Interwoven wire mesh of aluminum, 14 gage, 0.0641 inch diameter wire, 1/2 inch open weave, diagonal design.

C. Flashings: Of same material as louver frame, formed to required shape, single length in one piece per location.

D. Sealant for Setting Sills and Sill Flashing: Non-curing butyl type.

PART 3 EXECUTION

3.01 EXAMINATION

A. Verify that prepared openings and flashings are ready to receive this work and opening dimensions are as indicated on shop drawings.

B. Verify that field measurements are as indicated.

3.02 INSTALLATION

A. Install louver assembly in accordance with manufacturer's instructions.

B. Install louvers level and plumb.

C. Set sill members and sill flashing in continuous bead of sealant.

D. Install flashings and align louver assembly to ensure moisture shed from flashings and diversion of moisture to exterior.

E. Secure louver frames in openings with concealed fasteners.

F. Coordinate with installation of mechanical ductwork.

3.03 CLEANING

A. Strip protective finish coverings.

B. Clean surfaces and components.

END OF SECTION

SECTION 09 0561
COMMON WORK RESULTS FOR FLOORING PREPARATION

PART 1 GENERAL

1.01 SECTION INCLUDES

A. This section applies to all floors identified in the contract documents as to receive the following types of floor coverings:
   1. Resilient tile and sheet.
   2. Carpet tile.
   3. Thin-set ceramic tile and stone tile.
   4. Terrazzo.

B. Preparation of new concrete floor slabs for installation of floor coverings.

C. Testing of concrete floor slabs for moisture and alkalinity (pH).

D. Remediation of concrete floor slabs due to unsatisfactory moisture or alkalinity (pH) conditions.
   1. Contractor shall perform all specified remediation of concrete floor slabs. If such remediation is indicated by testing agency's report and is due to a condition not under Contractor's control or could not have been predicted by examination prior to entering into the contract, a contract modification will be issued.

E. Remedial floor coatings.

1.02 PRICE AND PAYMENT PROCEDURES

A. Unit Price for Remedial Floor Coating or Sheet Membrane: Do not include the cost of the floor coating or underlayment in the base bid; state on the bid form the unit price per square foot for the floor coating or underlayment, installed, in the event such remediation is required.
   1. Base the unit price on the assumption that the floor area to be treated is primarily open, not divided into rooms and corridors.

1.03 REFERENCE STANDARDS

A. ASTM C109/C109M - Standard Test Method for Compressive Strength of Hydraulic Cement Mortars (Using 2-in. or (50-mm) Cube Specimens); 2016a.

B. ASTM C472 - Standard Test Methods for Physical Testing of Gypsum, Gypsum Plasters and Gypsum Concrete; 1999 (Reapproved 2014).

C. ASTM F710 - Standard Practice for Preparing Concrete Floors to Receive Resilient Flooring; 2011.

D. ASTM F1869 - Standard Test Method for Measuring Moisture Vapor Emission Rate of Concrete Subfloor Using Anhydrous Calcium Chloride; 2011.

E. ASTM F2170 - Standard Test Method for Determining Relative Humidity in Concrete Floor Slabs Using in situ Probes; 2016a.

1.04 ADMINISTRATIVE REQUIREMENTS

A. Coordinate scheduling of cleaning and testing, so that preliminary cleaning has been completed for at least 24 hours prior to testing.

1.05 SUBMITTALS

A. Floor Covering and Adhesive Manufacturers' Product Literature: For each specific combination of substrate, floor covering, and adhesive to be used; showing:
   1. Moisture and alkalinity (pH) limits and test methods.

2. Manufacturer's required bond/compatibility test procedure.

B. Testing Agency's Report:
1. Description of areas tested; include floor plans and photographs if helpful.
2. Summary of conditions encountered.
3. Moisture and alkalinity (pH) test reports.
4. Copies of specified test methods.
5. Recommendations for remediation of unsatisfactory surfaces.
6. Submit report directly to Owner.
7. Submit report not more than two business days after conclusion of testing.

C. Adhesive Bond and Compatibility Test Report.

D. Remedial Materials Product Data: Manufacturer's published data on each product to be used for remediation.
1. Manufacturer's qualification statement.
2. Manufacturer's statement of compatibility with types of flooring applied over remedial product.
3. Test reports indicating compliance with specified performance requirements, performed by nationally recognized independent testing agency.
4. Manufacturer's installation instructions.
5. Specimen Warranty: Copy of warranty to be issued by coating manufacturer and certificate of underwriter's coverage of warranty.

1.06 QUALITY ASSURANCE

A. Moisture and alkalinity (pH) testing will be performed by an independent testing agency employed and paid by Owner.

B. Testing Agency Qualifications: Independent testing agency experienced in the types of testing specified.
1. Submit evidence of experience consisting of at least 3 test reports of the type required, with project Owner's project contact information.

C. Contractor's Responsibility Relating to Independent Agency Testing:
1. Provide access for and cooperate with testing agency.
2. Confirm date of start of testing at least 10 days prior to actual start.
3. Allow at least 4 business days on site for testing agency activities.
4. Achieve and maintain specified ambient conditions.
5. Notify Owner when specified ambient conditions have been achieved and when testing will start.

1.07 DELIVERY, STORAGE, AND HANDLING

A. Deliver, store, handle, and protect products in accordance with manufacturer’s instructions and recommendations.

B. Deliver materials in manufacturer’s packaging; include installation instructions.

C. Keep materials from freezing.

1.08 FIELD CONDITIONS

A. Maintain ambient temperature in spaces where concrete testing is being performed, and for at least 48 hours prior to testing, at not less than 65 degrees F or more than 85 degrees F.

B. Maintain relative humidity in spaces where concrete testing is being performed, and for at least 48 hours prior to testing, at not less than 40 percent and not more than 60 percent.

PART 2 PRODUCTS

2.01 MATERIALS

A. Patching Compound: Floor covering manufacturer's recommended product, suitable for conditions, and compatible with adhesive and floor covering. In the absence of any recommendation from flooring manufacturer, provide a product with the following characteristics:
   1. Cementitious moisture-, mildew-, and alkali-resistant compound, compatible with floor, floor covering, and floor covering adhesive, and capable of being feathered to nothing at edges.
   2. Compressive Strength: 3000 psi, minimum, after 28 days, when tested in accordance with ASTM C109/C109M or ASTM C472, whichever is appropriate.

B. Remedial Floor Coating: Single- or multi-layer coating or coating/overlay combination intended by its manufacturer to resist water vapor transmission to degree sufficient to meet flooring manufacturer's emission limits, resistant to the level of alkalinity (pH) found, and suitable for adhesion of flooring without further treatment.
   1. Thickness: As required for application and in accordance with manufacturer's installation instructions.
   2. Products:
      a. Custom Building Products; TechMVC Moisture Vapor and Alkalinity Barrier: www.custombuildingproducts.com.

PART 3 EXECUTION

3.01 CONCRETE SLAB PREPARATION

A. Perform following operations in the order indicated:
   1. Preliminary cleaning.
   2. Moisture vapor emission tests; 3 tests in the first 1000 square feet and one test in each additional 1000 square feet, unless otherwise indicated or required by flooring manufacturer.
   3. Internal relative humidity tests; in same locations as moisture vapor emission tests, unless otherwise indicated.
   4. Alkalinity (pH) tests; in same locations as moisture vapor emission tests, unless otherwise indicated.
   5. Patching, smoothing, and leveling, as required.
   6. Other preparation specified.
   7. Adhesive bond and compatibility test.
   8. Protection.

B. Remediations:
   1. Active Water Leaks or Continuing Moisture Migration to Surface of Slab: Correct this condition before doing any other remediation; re-test after correction.
   2. Excessive Moisture Emission or Relative Humidity: If an adhesive that is resistant to the level of moisture present is available and acceptable to flooring manufacturer, use that adhesive for installation of the flooring; if not, apply remedial floor coating or remedial sheet membrane over entire suspect floor area.
   3. Excessive Alkalinity (pH): If remedial floor coating is necessary to address excessive moisture, no additional remediation is required; if not, if an adhesive that is resistant to the level present is available and acceptable to the flooring manufacturer, use that

adhesive for installation of the flooring; otherwise, apply a skim coat of specified patching compound over entire suspect floor area.

3.02 PRELIMINARY CLEANING

A. Clean floors of dust, solvents, paint, wax, oil, grease, asphalt, residual adhesive, adhesive removers, film-forming curing compounds, sealing compounds, alkaline salts, excessive laitance, mold, mildew, and other materials that might prevent adhesive bond.

B. Do not use solvents or other chemicals for cleaning.

3.03 MOISTURE VAPOR EMISSION TESTING

A. Where the floor covering manufacturer's requirements conflict with either the referenced test method or this specification, comply with the manufacturer's requirements.

B. Where this specification conflicts with the referenced test method, comply with the requirements of this section.

C. Test in accordance with ASTM F1869 and as follows.

D. Plastic sheet test and mat bond test may not be substituted for the specified ASTM test method, as those methods do not quantify the moisture content sufficiently.

E. In the event that test values exceed floor covering manufacturer's limits, perform remediation as indicated. In the absence of manufacturer limits, perform remediation if test values exceed 3 pounds per 1000 square feet per 24 hours.

F. Report: Report the information required by the test method.

3.04 INTERNAL RELATIVE HUMIDITY TESTING

A. Where the floor covering manufacturer's requirements conflict with either the referenced test method or this specification, comply with the manufacturer's requirements.

B. Where this specification conflicts with the referenced test method, comply with the requirements of this section.

C. Test in accordance with ASTM F2170 Procedure A and as follows.

D. Testing with electrical impedance or resistance apparatus may not be substituted for the specified ASTM test method, as the values determined are not comparable to the ASTM test values and do not quantify the moisture content sufficiently.

E. In the event that test values exceed floor covering manufacturer's limits, perform remediation as indicated. In the absence of manufacturer limits, perform remediation if any test value exceeds 75 percent relative humidity.

F. Report: Report the information required by the test method.

3.05 ALKALINITY TESTING

A. Where the floor covering manufacturer's requirements conflict with either the referenced test method or this specification, comply with the manufacturer's requirements.

B. The following procedure is the equivalent of that described in ASTM F710, repeated here for the Contractor's convenience.

C. Use a wide range alkalinity (pH) test paper, its associated chart, and distilled or deionized water.

D. Place several drops of water on a clean surface of concrete, forming a puddle approximately 1 inch in diameter. Allow the puddle to set for approximately 60 seconds, then dip the alkalinity (pH) test paper into the water, remove it, and compare immediately to chart to determine alkalinity (pH) reading.

E. In the event that test values exceed floor covering manufacturer's limits, perform remediation as indicated. In the absence of manufacturer limits, perform remediation if alkalinity (pH) test value is over 10.

3.06 PREPARATION

A. See individual floor covering section(s) for additional requirements.

B. Comply with requirements and recommendations of floor covering manufacturer.

C. Fill and smooth surface cracks, grooves, depressions, control joints and other non-moving joints, and other irregularities with patching compound.

D. Do not fill expansion joints, isolation joints, or other moving joints.

3.07 ADHESIVE BOND AND COMPATIBILITY TESTING

A. Comply with requirements and recommendations of floor covering manufacturer.

3.08 APPLICATION OF REMEDIAL FLOOR COATING

A. Comply with requirements and recommendations of coating manufacturer.

3.09 PROTECTION

A. Cover prepared floors with building paper or other durable covering.

END OF SECTION

SECTION 09 2116
GYPSUM BOARD ASSEMBLIES

PART 1 GENERAL

1.01 SECTION INCLUDES

A. Performance criteria for gypsum board assemblies.

B. Metal stud wall framing.

C. Metal channel ceiling framing.

D. Gypsum sheathing.

E. Cementitious backing board.

F. Gypsum wallboard.

G. Joint treatment and accessories.

1.02 RELATED REQUIREMENTS

A. Section 05 4000 - Cold-Formed Metal Framing: Exterior wind-load-bearing metal stud framing.

B. Section 06 1000 - Rough Carpentry: Wood blocking product and execution requirements.

C. Section 07 2100 - Thermal Insulation: Acoustic insulation.

D. Section 07 8400 - Firestopping: Top-of-wall assemblies at fire rated walls.

E. Section 07 9200 - Joint Sealants: Sealing acoustical gaps in construction other than gypsum board or plaster work.

1.03 REFERENCE STANDARDS

A. ASTM C475/C475M - Standard Specification for Joint Compound and Joint Tape for Finishing Gypsum Board; 2015.

B. ASTM C645 - Standard Specification for Nonstructural Steel Framing Members; 2014.

C. ASTM C754 - Standard Specification for Installation of Steel Framing Members to Receive Screw-Attached Gypsum Panel Products; 2017.

D. ASTM C840 - Standard Specification for Application and Finishing of Gypsum Board; 2016.

E. ASTM C954 - Standard Specification for Steel Drill Screws for the Application of Gypsum Panel Products or Metal Plaster Bases to Steel Studs From 0.033 in. (0.84 mm) to 0.112 in. (2.84 mm) in Thickness; 2015.

F. ASTM C1002 - Standard Specification for Steel Self-Piercing Tapping Screws for Application of Gypsum Panel Products or Metal Plaster Bases to Wood Studs or Steel Studs; 2016.

G. ASTM C1047 - Standard Specification for Accessories For Gypsum Wallboard and Gypsum Veneer Base; 2014a.

H. ASTM C1177/C1177M - Standard Specification for Glass Mat Gypsum Substrate for Use as Sheathing; 2013.

I. ASTM C1278/C1278M - Standard Specification for Fiber-Reinforced Gypsum Panel; 2007a (Reapproved 2015).

J. ASTM C1280 - Standard Specification for Application of Exterior Gypsum Panel Products for Use as Sheathing; 2013a.

K. ASTM C1325 - Specification for Non-Asbestos Fiber-Mat Reinforced Cementitious Backer Units; 2017.

L. ASTM C1396/C1396M - Standard Specification for Gypsum Board; 2014.

M. ASTM C1629/C1629M - Standard Classification for Abuse-Resistant Nondecorated Interior Gypsum Panel Products and Fiber-Reinforced Cement Panels; 2015.

N. ASTM C1658/C1658M - Standard Specification for Glass Mat Gypsum Panels; 2013.

O. ASTM D3273 - Standard Test Method for Resistance to Growth of Mold on the Surface of Interior Coatings in an Environmental Chamber; 2016.

P. ASTM E90 - Standard Test Method for Laboratory Measurement of Airborne Sound Transmission Loss of Building Partitions and Elements; 2009 (Reapproved 2016).

Q. ASTM E413 - Classification for Rating Sound Insulation; 2016.

R. GA-216 - Application and Finishing of Gypsum Board; 2016.

S. GA-226 - Application of Gypsum Board to Form Curved Surfaces; Gypsum Association; 2016.

T. UL (FRD) - Fire Resistance Directory; current edition.

1.04 SUBMITTALS

A. Product Data: Provide data on metal framing, gypsum board, accessories, and joint finishing system.

B. Product Data: Provide manufacturer's data on partition head to structure connectors, showing compliance with requirements.

C. Test Reports: For stud framing products that do not comply with ASTM C645 or ASTM C754, provide independent laboratory reports showing maximum stud heights at required spacings and deflections.

1.05 QUALITY ASSURANCE

A. Installer Qualifications: Company specializing in performing gypsum board installation and finishing.

PART 2 PRODUCTS

2.01 GYPSUM BOARD ASSEMBLIES

A. Provide completed assemblies complying with ASTM C840 and GA-216.
   1. See PART 3 for finishing requirements.

B. Interior Partitions: Provide completed assemblies with the following characteristics:
   1. Acoustic Attenuation: STC as indicated calculated in accordance with ASTM E413, based on tests conducted in accordance with ASTM E90.

C. Shaft Walls at HVAC Shafts: Provide completed assemblies with the following characteristics:
   1. Air Pressure Within Shaft: Sustained loads of 5 lbf/sq ft with maximum mid-span deflection of L/240.
   2. Acoustic Attenuation: STC of 35-39 calculated in accordance with ASTM E413, based on tests conducted in accordance with ASTM E90.

D. Fire Rated Assemblies: Provide completed assemblies with the following characteristics:
   1. UL Assembly Numbers: Provide construction equivalent to that listed for the particular assembly in the current UL (FRD).
      a. Refer to Drawings for UL Assembly Numbers.

2.02 METAL FRAMING MATERIALS

A. Manufacturers - Metal Framing, Connectors, and Accessories:

1. Clarkwestern Dietrich Building Systems LLC: www.clarkdietrich.com.
2. Marino: www.marinoware.com.
3. Phillips Manufacturing Company: www.phillipsmfg.com.
4. Substitutions: See Section 01 6000 - Product Requirements.

B. Non-Loadbearing Framing System Components: ASTM C645; galvanized sheet steel, of size and properties necessary to comply with ASTM C754 for the spacing indicated, with maximum deflection of wall framing of L/120 at 5 psf.
1. Studs: "C" shaped with flat or formed webs with knurled faces.
2. Runners: U shaped, sized to match studs.
3. Ceiling Channels: C-shaped.
4. Furring: Hat-shaped sections, minimum depth of 7/8 inch.

C. Loadbearing Studs for Application of Gypsum Board: As specified in Section 05 4000.

D. Shaft Wall Studs and Accessories: ASTM C645; galvanized sheet steel, of size and properties necessary to comply with ASTM C754 and specified performance requirements.

E. Ceiling Hangers: Type and size as specified in ASTM C754 for spacing required.

F. Partition Head To Structure Connections: Provide track fastened to structure with legs of sufficient length to accommodate deflection, for friction fit of studs cut short and fastened as indicated on drawings.

2.03 BOARD MATERIALS

A. Manufacturers - Gypsum-Based Board:
1. CertainTeed Corporation: www.certainteed.com.
2. Georgia-Pacific Gypsum: www.gpgypsum.com.
3. National Gypsum Company: www.nationalgypsum.com/#sle.
4. USG Corporation: www.usg.com.
5. Substitutions: See Section 01 6000 - Product Requirements.

B. Gypsum Wallboard: Paper-faced gypsum panels as defined in ASTM C1396/C1396M; sizes to minimize joints in place; ends square cut.
1. Application: Use for vertical surfaces and ceilings, 8'-0" and higher, unless otherwise indicated. Use for inner layer of multi-layer applications, unless otherwise indicated.
2. Mold Resistance: Score of 10, when tested in accordance with ASTM D3273.
   a. Mold resistant board is required at all locations.
3. At Assemblies Indicated with Fire-Rating: Use type required by indicated tested assembly; if no tested assembly is indicated, use Type X board, UL or WH listed.
4. Thickness:
   a. Vertical Surfaces: 5/8 inch.
   b. Ceilings: 5/8 inch.
5. Mold Resistant Paper Faced Products:
   a. National Gypsum Company; Gold Bond XP Gypsum Board.
   b. CertainTeed Corporation; ProRoc Brand Moisture & Mold Resistant Gypsum Board..
   c. Lafarge North America Inc; Mold Defense Drywall..
   d. USG Corporation; Sheetrock Brand Mold Tough Gypsum Panels.
   e. Substitutions: See Section 01 6000 - Product Requirements.

C. Abuse Resistant Wallboard:
1. Application: All locations, 8'-0" and below.

2. Surface Abrasion: Level 2, minimum, when tested in accordance with ASTM C1629/C1629M.
3. Mold Resistance: Score of 10, when tested in accordance with ASTM D3273.
4. Paper-Faced Type: Gypsum wallboard as defined in ASTM C1396/C1396M.
5. Unfaced Type: Interior fiber-reinforced gypsum panels as defined in ASTM C1278/C1278M.
6. Type: Fire resistance rated Type X, UL or WH listed.
7. Thickness: 5/8 inch.
8. Edges: Tapered.
9. Products:
   a. National Gypsum Company; Gold Bond Hi-Abuse XP Gypsum Board.
   b. National Gypsum Company; Gold Bond HI-Impact XP Gypsum Board.
   c. USG; Fiberock Aqua-Tough Interior Panel..
   d. Substitutions: See Section 01 6000 - Product Requirements.

D. Backing Board For Wet Areas:
1. Application: Surfaces behind tile in wet areas including shower room tile installations.
2. Application: Exterior soffits where textured acrylic finish systems are indicated.
3. ANSI Cement-Based Board: Non-gypsum-based; aggregated Portland cement panels with glass fiber mesh embedded in front and back surfaces complying with ANSI A118.9-SystemDeleted or ASTM C1325.
   a. Thickness: 1/2 inch.
   b. Products:
      1) Custom Building Products; Wonderboard: www.custombuildingproducts.com.
      2) National Gypsum Company; PermaBase Cement Board: www.nationalgypsum.com/#sle.
      3) USG Corporation; Durock Brand Cement Board: www.usg.com.
      4) Substitutions: See Section 01 6000 - Product Requirements.

E. Backing Board For Non-Wet Areas: Water-resistant gypsum backing board as defined in ASTM C1396/C1396M; sizes to minimum joints in place; ends square cut.
1. Application: Vertical surfaces behind thinset tile, except in wet areas.
2. Mold Resistance: Score of 10, when tested in accordance with ASTM D3273.
3. At Assemblies Indicated with Fire-Rating: Use type required by indicated tested assembly; if no tested assembly is indicated, use Type X board, UL or WH listed.
4. Type: Type X, in locations indicated.
5. Type X Thickness: 5/8 inch.
6. Edges: Tapered.
7. Products:
   a. National Gypsum Company; Gold Bond Hi-Abuse XP Gypsum Board.
   b. Georgia-Pacific Gypsum LLC; DensShield Tile Backer..
   c. USG; Fiberock Aqua-Tough Interior Panel..
   d. Substitutions: See Section 01 6000 - Product Requirements.

F. Exterior Sheathing Board: Sizes to minimize joints in place; ends square cut.
1. Application: Exterior sheathing, unless otherwise indicated.
2. Mold Resistance: Score of 10, when tested in accordance with ASTM D3273.
3. Glass Mat Faced Sheathing: Glass mat faced gypsum substrate as defined in ASTM C1177/C1177M.
4. Core Type: Type X, as indicated.

5. Type X Thickness: 5/8 inch.
6. Edges: Square.
7. Glass Mat Faced Products:
   a. Georgia-Pacific Gypsum; DensGlass Sheathing.
   b. National Gypsum Company; Gold Bond eXP Sheathing.
   c. CertainTeed Corporation; GlasRoc Brand..
   d. Substitutions: See Section 01 6000 - Product Requirements.

G. Shaftwall and Coreboard: Type X; 1 inch thick by 24 inches wide, tongue-and-groove long edges, ends square cut.
   1. Glass Mat Faced Type: Glass mat shaftliner gypsum panel or glass mat coreboard gypsum panel as defined in ASTM C1658/C1658M.
   2. Mold Resistance: Score of 10, when tested in accordance with ASTM D3273.
   3. Products:
      a. Georgia-Pacific Gypsum; DensGlass Ultra Shaftliner (mold-resistant).
      b. National Gypsum Company; Gold Bond Brand eXP Shaftliner.
      c. USG Corporation; Sheetrock Gypsum Liner Panels--Enhanced (mold-resistant)..
      d. Substitutions: See Section 01 6000 - Product Requirements.

2.04 ACCESSORIES

A. Resilient Sound Isolation Clips:
   1. Molded rubber and steel resilient sound isolation clip: Pliteq GenieClip Resilient Sound Isolation Clip; www.pliteq.com.
   2. Projection: 1-5/8 inches from supporting structure, when 7/8-inch drywall furring channels are used.

B. Acoustic Insulation: As specified in Section 07 2100.

C. Acoustic Sealant: As specified in Section 07 9200; Type 5.

D. Finishing Accessories: ASTM C1047, paper-faced galvanized steel, unless noted otherwise.
   1. Types: As detailed or required for finished appearance.

E. Beads, Joint Accessories, and Other Trim: ASTM C1047, Aluminum, unless noted otherwise.
   1. Architectural Reveal Beads:
      a. Reveal Depth: 5/8 inch.
      b. Reveal Width: 5/8 inch.
      c. Shapes: As indicated on drawings.
      d. Products:
         1) Reveals and moldings, as manufactured by Fry Reglet Corporation..
            (a) aluminum reveals and moldings: extruded alloy 6063 T5
            (b) Finish: chemical conversion coating, primed finish, clear anodized or other specified finish.

F. Joint Materials: ASTM C475/C475M and as recommended by gypsum board manufacturer for project conditions.
   1. Tape: 2 inch wide, coated glass fiber tape for joints and corners, except as otherwise indicated.
   2. Tape: 2 inch wide, creased paper tape for joints and corners, except as otherwise indicated.
   3. Chemical hardening type compound.

G. High Build Drywall Surfacer: Vinyl acrylic latex-based coating for spray application, designed to take the place of skim coating and separate paint primer in achieving Level 5 finish.

1. Products:
   a. USG Sheetrock Brand Tuff-Hide Primer-Surfacer.
   b. Substitutions: See Section 01 6000 - Product Requirements.

H. Screws for Fastening of Gypsum Panel Products to Cold-Formed Steel Studs Less than 0.033 inch in Thickness and Wood Members: ASTM C1002; self-piercing tapping screws, corrosion resistant.

I. Screws for Fastening of Gypsum Panel Products to Steel Members from 0.033 to 0.112 inch in Thickness: ASTM C954; steel drill screws, corrosion resistant.

J. Anchorage to Substrate: Tie wire, nails, screws, and other metal supports, of type and size to suit application; to rigidly secure materials in place.

PART 3 EXECUTION

3.01 EXAMINATION

A. Verify that project conditions are appropriate for work of this section to commence.

3.02 SHAFT WALL INSTALLATION

A. Shaft Wall Framing: Install in accordance with manufacturer's installation instructions.
   1. Fasten runners to structure with short leg to finished side, using appropriate power-driven fasteners at not more than 24 inches on center.
   2. Install studs at spacing required to meet performance requirements.

B. Shaft Wall Liner: Cut panels to accurate dimension and install sequentially between special friction studs.
   1. On walls over sixteen feet high, screw-attach studs to runners top and bottom.
   2. Seal perimeter of shaft wall and penetrations with acoustical sealant.

3.03 FRAMING INSTALLATION

A. Metal Framing: Install in accordance with ASTM C754 and manufacturer's instructions.

B. Suspended Ceilings and Soffits: Space framing and furring members as indicated.
   1. Level ceiling system to a tolerance of 1/1200.
   2. Laterally brace entire suspension system.

C. Studs: Space studs at 16 inches on center.
   1. Extend partition framing to structure in all locations.
   2. Partitions Terminating at Structure: Attach extended leg top runner to structure, maintain clearance between top of studs and structure, and brace both flanges of studs with continuous bridging.

D. Openings: Reinforce openings as required for weight of doors or operable panels, using not less than double studs at jambs.

E. Standard Wall Furring: Install at concrete and masonry walls scheduled to receive gypsum board, not more than 4 inches from floor and ceiling lines and abutting walls. Secure in place on alternate channel flanges at maximum 24 inches on center.
   1. Orientation: Horizontal.
   2. Spacing: At 16 inches on center.

F. Acoustic Furring: Where indicated, install resilient sound isolation clips at maximum 24 inches on center, and in accordance with manufacturer's instructions. Locate joints over framing members.

G. Blocking: Install wood blocking for support of:
   1. Framed openings.

2. Wall mounted cabinets.
3. Plumbing fixtures.
4. Toilet partitions.
5. Toilet accessories.
6. Wall mounted door hardware, including wall stops.
7. Handrails and wall brackets.
8. Display cases, markerboards, tack boards.
9. TV and monitor mounts.

3.04 ACOUSTIC ACCESSORIES INSTALLATION

A. Acoustic Insulation: Place tightly within spaces, around cut openings, behind and around electrical and mechanical items within partitions, and tight to items passing through partitions.

B. Acoustic Sealant: Install in accordance with manufacturer's instructions.
   1. Place two beads continuously on substrate before installation of perimeter framing members.
   2. Place continuous bead at perimeter of each layer of gypsum board.
   3. Seal around all penetrations by conduit, pipe, ducts, and rough-in boxes, except where firestopping is provided.

3.05 BOARD INSTALLATION

A. Comply with ASTM C840, GA-216, and manufacturer's instructions. Install to minimize butt end joints, especially in highly visible locations.

B. Single-Layer Non-Rated: Install gypsum board parallel to framing, with ends and edges occurring over firm bearing.

C. Double-Layer Non-Rated: Use gypsum board for first layer, placed perpendicular to framing or furring members, with ends and edges occurring over firm bearing. Place second layer parallel to framing or furring members. Offset joints of second layer from joints of first layer.

D. Fire-Rated Construction: Install gypsum board in strict compliance with requirements of assembly listing.

E. Exterior Sheathing: Comply with ASTM C1280. Install sheathing vertically, with edges butted tight and ends occurring over firm bearing.
   1. Seal joints, cut edges, and holes with water-resistant sealant.

F. Exterior Soffits: Install cementitious backing boards perpendicular to framing, with staggered end joints over framing members or other solid backing.
   1. Seal joints, cut edges, and holes with water resistant sealant.

G. Cementitious Backing Board: Install over steel framing members where indicated, in accordance with ANSI A108.11-SystemDeleted and manufacturer's instructions.

H. Installation on Metal Framing: Use screws for attachment of gypsum board.

I. Curved Surfaces: Apply gypsum board to curved substrates in accordance with GA-226.

3.06 INSTALLATION OF TRIM AND ACCESSORIES

A. Control Joints: Place control joints consistent with lines of building spaces and as indicated.
   1. Not more than 30 feet apart on walls and ceilings over 50 feet long.

B. Corner Beads: Install at external corners, using longest practical lengths.

C. Edge Trim: Install at locations where gypsum board abuts dissimilar materials.

D. Exterior Soffit Vents: Install according to manufacturer's written instructions and in locations indicated on the drawings. Provide vent area indicated on drawings.

3.07 JOINT TREATMENT

A. Glass Mat Faced Gypsum Board and Exterior Glass Mat Faced Sheathing: Use fiberglass joint tape, bedded and finished with chemical hardening type joint compound.

B. Paper Faced Gypsum Board: Use paper or fiberglass joint tape, bedded with chemical hardening type joint compound and finished with chemical hardening type joint compound.

C. Finish gypsum board in accordance with levels defined in ASTM C840, as follows:
   1. Level 5: Walls and ceilings to receive paint finish or wall coverings, in the following locations:
      a. Performing Arts Center Lobby and Vestibules
      b. Middle School Cafeteria
      c. Auditorium
      d. Stairs A and F
      e. Gymnasium Lobbies and Vestibules
      f. All locations with curved gypsum board walls
   2. Level 4: Walls and ceilings to receive paint finish or wall coverings, unless otherwise indicated.
   3. Level 2: In utility areas, behind cabinetry, and on backing board to receive tile finish.
   4. Level 1: Fire rated wall areas above finished ceilings, whether or not accessible in the completed construction.

D. Tape, fill, and sand exposed joints, edges, and corners to produce smooth surface ready to receive finishes.
   1. Feather coats of joint compound so that camber is maximum 1/32 inch.

E. Where Level 5 finish is indicated, spray apply high build drywall surfacer over entire surface after joints have been properly treated; achieve a flat and tool mark-free finish.

3.08 TOLERANCES

A. Maximum Variation of Finished Gypsum Board Surface from True Flatness: 1/8 inch in 10 feet in any direction.

END OF SECTION

SECTION 09 3000
TILING

PART 1 GENERAL

1.01 SECTION INCLUDES

A. Tile for floor applications.

B. Tile for wall applications.

C. Stone thresholds.

D. Trim.

1.02 RELATED REQUIREMENTS

A. Section 07 9200 - Joint Sealants: Sealing joints between tile work and adjacent construction and fixtures.

B. Section 09 0561 - Common Work Results for Flooring Preparation

C. Section 09 2116 - Gypsum Board Assemblies: Installation of tile backer board.

1.03 REFERENCE STANDARDS

A. ANSI A108.1a - American National Standard Specifications for Installation of Ceramic Tile in the Wet-Set Method, with Portland Cement Mortar; 2014.

B. ANSI A108.1b - American National Standard Specifications for Installation of Ceramic Tile on a Cured Portland Cement Mortar Setting Bed with Dry-Set or Latex-Portland Cement Mortar; 1999 (Reaffirmed 2010).

C. ANSI A108.1c - Specifications for Contractors Option: Installation of Ceramic Tile in the Wet-Set Method with Portland Cement Mortar or Installation of Ceramic Tile on a Cured Portland Cement Mortar Bed with Dry-Set or Latex-Portland Cement; 1999 (Reaffirmed 2010).

D. ANSI A108.4 - American National Standard Specifications for Installation of Ceramic Tile with Organic Adhesives or Water Cleanable Tile-Setting Epoxy Adhesive; 2009 (Revised).

E. ANSI A108.5 - American National Standard Specifications for Installation of Ceramic Tile with Dry-Set Portland Cement Mortar or Latex-Portland Cement Mortar; 1999 (Reaffirmed 2010).

F. ANSI A108.6 - American National Standard Specifications for Installation of Ceramic Tile with Chemical Resistant, Water Cleanable Tile-Setting and -Grouting Epoxy; 1999 (Reaffirmed 2010).

G. ANSI A108.8 - American National Standard Specifications for Installation of Ceramic Tile with Chemical Resistant Furan Resin Mortar and Grout; 1999 (Reaffirmed 2010).

H. ANSI A108.9 - American National Standard Specifications for Installation of Ceramic Tile with Modified Epoxy Emulsion Mortar/Grout; 1999 (Reaffirmed 2010).

I. ANSI A108.10 - American National Standard Specifications for Installation of Grout in Tilework; 1999 (Reaffirmed 2010).

J. ANSI A108.11-SystemDeleted - American National Standard for Interior Installation of Cementitious Backer Units; 2010 (Revised).

K. ANSI A108.12 - American National Standard for Installation of Ceramic Tile with EGP (Exterior glue plywood) Latex-Portland Cement Mortar; 1999 (Reaffirmed 2010).

L. ANSI A108.13 - American National Standard for Installation of Load Bearing, Bonded, Waterproof Membranes for Thin-Set Ceramic Tile and Dimension Stone; 2005 (Reaffirmed 2010).

M. ANSI A118.7 - American National Standard Specifications for High Performance Cement Grouts for Tile Installation; 2010 (Revised).

N. ANSI A118.15 - American National Standard Specifications for Improved Modified Dry-Set Cement Mortar ; 2012.

O. ANSI A137.1 - American National Standard Specifications for Ceramic Tile; 2013.1.

P. TCNA (HB) - Handbook for Ceramic, Glass, and Stone Tile Installation; 2015.

1.04 SUBMITTALS

A. Product Data: Provide manufacturers' data sheets on tile, mortar, grout, and accessories. Include instructions for using grouts and adhesives.

B. Samples: Mount tile and apply grout on two plywood panels, minimum 18 by 18 inches in size illustrating pattern, color variations, and grout joint size variations.

C. Maintenance Data: Include recommended cleaning methods, cleaning materials, and stain removal methods.

1.05 DELIVERY, STORAGE, AND HANDLING

A. Protect adhesives from freezing or overheating in accordance with manufacturer's instructions.

1.06 FIELD CONDITIONS

A. Do not install solvent-based products in an unventilated environment.

B. Maintain ambient and substrate temperature of 50 degrees F during installation of mortar materials.

PART 2 PRODUCTS

2.01 TILE

A. Porcelain Tile, Type PF -1, PFT-2: ANSI A137.1, standard grade.
   1. Size: 13 x 13 inch, nominal.
   2. Thickness: 3/8 inch.
   3. Surface Finish: Unglazed.
   4. Color(s): As indicated on drawings.
   5. Products:
      a. Basis of Design: Concrete Connection Daltile.

B. Porcelain Tile Wall Tile, Type PT-1 and PT-2:
   1. Refer to PT-1 and PT-2, above

C. Porcelain Tile Wall Tile, Type PT-3:
   1. Size: 12 x 24 inch, nominal.
   2. Thickness: 3/8 inch.
   3. Product:
      a. Basis of Design: Portfoilo by Daltile.

D. Porcelain Tile Wall Tile, Type PT-4:
   1. Product:
      a. Basis of Design: To be determined.

2.02 TRIM AND ACCESSORIES

A. Non-Ceramic Trim: Brushed stainless steel, style and dimensions to suit application, for setting using tile mortar or adhesive.
   1. Applications:
      a. Floor to wall joints: Cove base.
   2. Manufacturer:
      a. Schluter-Systems: www.schluter.com.

B. Thresholds: Marble, white or gray, honed finish; width as shown by full width of wall or frame opening; 3/4 inch thick; beveled one long edge with radiused corners on top side; without holes, cracks, or open seams.

2.03 SETTING MATERIALS

A. Latex -Portland Cement (LHT) Large and Heavy Tile Mortar : ANSI A118.4/118.15.
   1. Applications: Use this type of bond coat where indicated with tiles with facial dimension of 15” or greater.
   2. Products:
      a. Custom Building Products; Pro-Lite Premium LHT Mortar.
      b. Custom Building Products; MegsLite Crack Prevention Mortar.
      c. Mapei, Ultraflex 3.

2.04 GROUTS

A. High Performance Grout: ANSI A118.7 polymer modified cement grout.
   1. Applications: Use this type of grout where indicated and where no other type of grout is indicated.
   2. Use sanded grout for joints 1/8 inch wide and larger; use unsanded grout for joints less than 1/8 inch wide.
   3. Color(s): As selected by Architect from manufacturer's full line.
   4. Products:
      a. Custom Building Products; Prism Color Consistent Grout.
      b. Mapei; Ultracolor Plus

2.05 MAINTENANCE MATERIALS

A. Tile Sealant: 100% Silicone Caulk complying with ASTM C920, Class 25, moisture and mildew resistant type.
   1. Applications: Between tile and plumbing fixtures; at control joints.
   2. Color(s): As selected by Architect from manufacturer's full line.
   3. Products:
      a. Custom Building Products; 100 Silicone Caulk.
      b. Approved equal product.

B. Grout Sealant: Manufacturer's standard product for sealing grout joints that does not change color or appearance of grout.
   1. Products:
      a. Bonsal, W. R., Company; Grout Sealer.
      b. Bostik; CeramaSeal Grout Sealer.
      c. C-Cure; Penetrating Sealer 978.
      d. MAPEI Corporation; KER 003, Silicone Spray Sealer for Cementitious Tile Grout.
      e. Summitville Tiles, Inc.; SL-15, Invisible Seal Penetrating Grout and Tile Sealer.
      f. TEC Specialty Products Inc.; TA-256 Penetrating Silicone Grout Sealer.”

g. Aqua Mix; Sealers Choice Gold.

2.06 ACCESSORY MATERIALS

A. Premium Latex Based Waterproofing and Crack Isolation Membrane; fast setting, flexible, thin, load-bearing, waterproofing membrane system consisting of a premixed, quick-drying liquid latex, complying with ANSI A118.10 and ANSI A118.12; and having IAMPO certification as a shower pan liner.
   1. Products:
      a. MAPEI, "AquaDefense".
      b. Custom Building Products; Red Gard.

B. Premixed, liquid-rubber, quick-drying crack-isolation membrane for installation under ceramic tile or stone complying with ANSI A118.12;
   1. Products:
      a. MAPEI, “Mapelastic CI”.
      b. Custom Building Products; Fracture Free.

PART 3 EXECUTION

3.01 EXAMINATION

A. Verify that sub-floor surfaces are smooth and flat within the tolerances specified for that type of work and are ready to receive tile.

B. Verify that wall surfaces are smooth and flat within the tolerances specified for that type of work, are dust-free, and are ready to receive tile.

C. Verify that sub-floor surfaces are dust-free and free of substances that could impair bonding of setting materials to sub-floor surfaces.

D. Verify that concrete sub-floor surfaces are ready for tile installation by testing for moisture emission rate and alkalinity; obtain instructions if test results are not within limits recommended by tile manufacturer and setting materials manufacturer.

E. Verify that required floor-mounted utilities are in correct location.

3.02 PREPARATION

A. Protect surrounding work from damage.

B. Vacuum clean surfaces and damp clean.

C. Seal substrate surface cracks with filler.

3.03 INSTALLATION - GENERAL

A. Install tile and thresholds and grout in accordance with applicable requirements of ANSI A108.1a through ANSI A108.13, manufacturer's instructions, and TCNA (HB) recommendations.

B. Lay tile to pattern indicated. Do not interrupt tile pattern through openings.

C. Cut and fit tile to penetrations through tile, leaving sealant joint space. Form corners and bases neatly. Align floor joints.

D. Place tile joints uniform in width, subject to variance in tolerance allowed in tile size. Make grout joints without voids, cracks, excess mortar or excess grout, or too little grout.

E. Form internal angles square and external angles bullnosed.

F. Install non-ceramic trim in accordance with manufacturer's instructions.

G. Sound tile after setting. Replace hollow sounding units.

H. Keep control and expansion joints free of mortar, grout, and adhesive.

I. Prior to grouting, allow installation to completely cure; minimum of 48 hours.

J. Grout tile joints unless otherwise indicated. Use standard grout unless otherwise indicated.

K. At changes in plane and tile-to-tile control joints, use tile sealant instead of grout, with either bond breaker tape or backer rod as appropriate to prevent three-sided bonding.

3.04 INSTALLATION - FLOORS - THIN-SET METHODS

A. Over interior concrete substrates, install in accordance with The Tile Council of North America Handbook Method F125-Full, with Latex/Polymer Modified Portland Cement Mortar and Polymer Modified Tile grout, unless otherwise indicated.

1. Use uncoupling membrane if tiling over "Green Concrete" under tile in accordance with TCNA 128-16 unless other underlayment is indicated.
2. Where waterproofing membrane is indicated, install in accordance with TCNA (HB) Method F122 and F122A, with latex-Portland cement grout.
   a. Locations: Showers, tiled custodial closets and toilet rooms with floor drains

B. Over wood substrate with backer board underlayment, install in accordance with TCNA (HB) Method F144, for cementitious backer boards, with specified grout.

3.05 INSTALLATION - FLOORS –SELF LEVELING

A. Over interior concrete substrates, install in accordance with TCNA (HB) Method F205A , unless otherwise indicated.

B. Waterproofing Membrane: Install as recommended by manufacturer and as specified in the section in which the product is specified.

3.06 INSTALLATION - WALL TILE

A. Over cementitious backer units on studs, install in accordance with TCNA (HB) Method W244C, using membrane at toilet rooms.

B. Over interior concrete and masonry install in accordance with TCNA (HB) Method W202, thin-set with dry-set or latex-Portland cement bond coat.

3.07 GROUTING

A. Follow grout manufacturer's recommendations as to grouting procedures and precautions.

B. Remove all grout haze, observing both tile and grout manufacturer's recommendations as to use of acid and chemical cleaners.

C. Rinse tile work thoroughly with clean water before and after chemical cleaners.

D. Polish surface of tile work with soft cloth.

3.08 PROTECTION, CLEANING AND GROUT SEALING

A. Do not permit traffic over finished floor surface for 4 days after installation.

B. Apply to clean, completed tile walls and floors a protective coat of neutral cleaner solution, 1 part cleaner to 1 part water.

C. Cover tile floors with heavy-duty, non-staining construction paper, masked in place.

D. Prior to final acceptance of tile work, remove paper and rinse protective coat of neutral cleaner from all the surfaces.

E. Clean tile and grout surfaces.

F. Apply grout sealant according to manufacturer's directions.

END OF SECTION

SECTION 09 5100
ACOUSTICAL CEILINGS

PART 1 GENERAL

1.01 SECTION INCLUDES

A. Suspended metal grid ceiling system.

B. Acoustical units.

C. Accessories

1.02 RELATED REQUIREMENTS

A. Section 07 9200 - Joint Sealants: Acoustical sealant.

B. Section 21 1300 - Fire-Suppression Sprinkler Systems: Sprinkler heads in ceiling system.

C. Section 23 3700 - Air Outlets and Inlets: Air diffusion devices in ceiling.

D. Section 26 5100 - Interior Lighting: Light fixtures in ceiling system.

E. Section 27 5116 - Public Address Systems: Speakers in ceiling system.

1.03 REFERENCE STANDARDS

A. ASTM C635/C635M - Standard Specification for the Manufacture, Performance, and Testing of Metal Suspension Systems for Acoustical Tile and Lay-in Panel Ceilings; 2013a.

B. ASTM C636/C636M - Standard Practice for Installation of Metal Ceiling Suspension Systems for Acoustical Tile and Lay-In Panels; 2013.

C. ASTM E580/E580M - Standard Practice for Installation of Ceiling Suspension Systems for Acoustical Tile and Lay-in Panels in Areas Subject to Earthquake Ground Motions; 2014.

D. ASTM E1264 - Standard Classification for Acoustical Ceiling Products; 2014.

E. ASTM E1264 - Standard Classification for Acoustical Ceiling Products; 2014.

1.04 ADMINISTRATIVE REQUIREMENTS

A. Sequence work to ensure acoustical ceilings are not installed until building is enclosed, sufficient heat is provided, dust generating activities have terminated, and overhead work is completed, tested, and approved.

B. Do not install acoustical units until after interior wet work is dry.

1.05 SUBMITTALS

A. See Section 01 3000 - Administrative Requirements, for submittal procedures.

B. Product Data: Provide data on suspension system components, acoustical units, and other related components.

C. Samples: Submit two samples 12 x 12 inch (305 x 305 mm) or of size illustrating material and finish of acoustical units.

D. Manufacturer's Installation Instructions: Indicate special procedures, perimeter conditions requiring special attention, and related work.

1.06 QUALITY ASSURANCE

A. Suspension System Manufacturer Qualifications: Company specializing in manufacturing the products specified in this section with minimum three years documented experience.

B. Acoustical Unit Manufacturer Qualifications: Company specializing in manufacturing the products specified in this section with minimum three years documented experience.

1.07 FIELD CONDITIONS

A. Maintain uniform temperature of minimum 60 degrees F, and maximum humidity of 40 percent prior to, during, and after acoustical unit installation.

1.08 PROJECT CONDITIONS

A. Sequence work to ensure acoustical ceilings are not installed until building is enclosed, sufficient heat is provided, dust generating activities have terminated, and overhead work is completed, tested, and approved.

B. Install acoustical units after interior wet work is dry.

1.09 EXTRA MATERIALS

A. Provide 1/2 of 1 percent of total acoustical unit area of each type of acoustical unit for Owner's use in maintenance of project.

PART 2 PRODUCTS

2.01 MANUFACTURERS

A. Acoustic Tiles/Panels:
   1. Armstrong World Industries, Inc: www.armstrong.com.
   2. CertainTeed Corporation: www.certainteed.com.
   3. USG: www.usg.com.
   4. Substitutions: See Section 01 6000 - Product Requirements.

B. Suspension Systems:
   1. Same as for acoustical units.

2.02 ACOUSTICAL UNITS

A. Acoustical Units - General: ASTM E1264, Class A.

B. Acoustical Panels Type 1: Painted mineral fiber, ASTM E1264 Type III, with the following characteristics:
   1. Size: 24 by 24 inches.
   2. Thickness: 3/4 inches.
   3. Composition: Wet formed.
   4. NRC Range:.70 , determined as specified in ASTM E 1264.
   5. Ceiling Attenuation Class (CAC): 35, determined as specified in ASTM E1264.
   6. Edge: Square.
   7. Surface Color: White.
   8. Suspension System: Exposed grid Type 1.
      USG - Radar ClimaPlus High NRC/CAC Item No. 22521
      a. CAC: 35 to 40.
   9. Products:
      a. USG - Radar ClimaPlus High NRC/CAC Item No. 22521.
      b. Armstrong Fine Fissured 1713.
      c. Substitutions: See Section 01 6000 - Product Requirements.
   10. Location: Classrooms and Offices- typical, unless otherwise noted

C. Acoustical Panels Type 2: Painted mineral fiber, ASTM E 1264 Type 1 with the following characteristics:
   1. Size: 24 by 24 inches.
   2. Thickness: 5/8 inches.
   3. Composition: Wet formed.

4. NRC Range:.50 to.60, determined as specified in ASTM E1264.
5. Ceiling Attenuation Class (CAC): 38, determined as specified in ASTM E1264.
6. Edge: Square.
7. Surface Color: White.
8. Surface Pattern: fine texture.
9. Product:
   a. Armstrong Dune 1772.
   b. USG Olympia 4211.
10. Suspension System: Exposed grid Type 1 .
11. Location: Student corridors, other areas as noted.

D. Acoustical Panels Type 2A: Painted mineral fiber, ASTM E 1264 Type 1 with the following characteristics:
1. Size: 24 by 24 inches.
2. Thickness: 3/4 inches.
3. Composition: Wet formed.
4. NRC Range:.50 to.60, determined as specified in ASTM E1264.
5. Ceiling Attenuation Class (CAC): 33, determined as specified in ASTM E1264.
6. Edge: Square.
7. Surface Color: White.
8. Surface Pattern: coarse texture.
9. Product:
   a. Armstrong Armatuff 861.
   b. USG Rock Face ClimaPlus 56335.
10. Suspension System: Exposed grid Type 2 .
11. Location: Toilet Rooms, other areas as noted.

E. Acoustical Panels Type 3: Painted mineral fiber, ASTM E 1264 Type 1 with the following characteristics:
1. Size: 24 by 24 inches.
2. Thickness: 7/8 inches.
3. Composition: Wet formed.
4. NRC Range:.80 to.85, determined as specified in ASTM E1264.
5. Ceiling Attenuation Class (CAC): 35, determined in accordance with ASTM E1264.
6. Edge: Square.
7. Surface Color: White.
8. Surface Pattern: fine texture.
9. Product:
   a. Armstrong : Health Zone Ultima High NRC, Item No 1445
   b. USG: Mars ClimaPlus Healthcare, Item No. 86152
10. Suspension System: Exposed grid Type 2.
11. Location: Kitchen, culinary arts and as noted.

F. Acoustical Panels Type 4: Painted mineral fiber, ASTM E1264 Type III, with the following characteristics:
1. Size: 24 x 24 inches.
2. Thickness: 7/8 inches.
3. Composition: Wet formed.
4. Light Reflectance:.85 percent, determined as specified in ASTM E1264.
5. NRC Range:.75 , determined as specified in ASTM E 1264.

6. Ceiling Attenuation Class (CAC): 35, determined as specified in ASTM E1264.
7. Edge: SLT.
8. Surface Color: White.
9. Surface Pattern: fine texture.
10. Suspension System: Exposed grid Type 1.
11. Products:
    a. Armstrong : Cirrus High NRC, Item No 574
    b. USG - Eclipse High NRC, Propduct No. 563
12. Location: as shown.

2.03 SUSPENSION SYSTEM(S) AND PERIMETER TRIM

A. Suspension Systems - General: Complying with ASTM C635/C635M; die cut and interlocking components, with stabilizer bars, clips, splices, perimeter moldings, and hold down clips as required.

B. Exposed Steel Suspension System Type 1: Formed galvanized steel, commercial quality cold rolled; intermediate-duty.
   1. Profile: Tee; 15/16 inch wide face.
   2. Construction: Double web.
   3. Finish: White painted.
   4. Product: Prelude XL by Armstrong; DX by USG

C. Exposed Steel Suspension System Type 2: Where this designation is indicated, provide acoustical panel ceiling suspension system complying with the following:
   1. Products:
      a. ZXLA; USG
      b. Prelude Plus; Armstrong
   2. Wide-Face, Capped, Double-Web, Hot-Dip Galvanized-Steel Suspension System: Main and cross runners roll formed from cold-rolled steel sheet hot-dip galvanized according to ASTM A 653/A 653M, G60 (Z180) coating designation, with pre-finished, 15/16-inch-(24-mm-) wide, aluminum caps on flanges; other characteristics as follows:
      a. Aluminum Cap Finish: Painted white.

D. Perimeter Trim:
   1. Products:
      a. Borders at Clouds: Armstrong Axiom Classic Trim, 5-13/16" (nominal 6") high, extruded aluminum, curved applications.
   2. Finish: as selected from manufacturer's standard range.

2.04 ACCESSORIES

A. Support Channels and Hangers: Galvanized steel; size and type to suit application, seismic requirements, and ceiling system flatness requirement specified.

B. Perimeter Moldings: Same material and finish as grid.
   1. At Exposed Grid: Provide L-shaped molding for mounting at same elevation as face of grid.

C. Acoustical Insulation: Specified in Section 07 2100.

D. Acoustical Sealant For Perimeter Moldings: Non-hardening, non-skinning, for use in conjunction with suspended ceiling system.
   1. Acoustical Sealant for Exposed and Concealed Joints: Manufacturer's standard non-sag, paintable, non-staining latex sealant complying with ASTM C 834 and the following requirements:

a. Product is effective in reducing airborne sound transmission through perimeter joints and openings in building construction as demonstrated by testing representative assemblies according to ASTM E 90.

2. Available Products: Subject to compliance with requirements, products that may be incorporated into the Work include, but are not limited to, the following:
   a. Acoustical Sealant for Exposed and Concealed Joints:
      1) PL Acoustical Sealant; Chemrex, Inc., Contech Brands.
      2) AC-20 FTR Acoustical and Insulation Sealant; Pecora Corp.
      3) SHEETROCK Acoustical Sealant; United States Gypsum Co.

E. Gasket For Perimeter Moldings: Closed cell rubber sponge tape.

F. Touch-up Paint: Type and color to match acoustical and grid units.

PART 3 EXECUTION

3.01 EXAMINATION

A. Verify existing conditions before starting work.

B. Verify that layout of hangers will not interfere with other work.

3.02 INSTALLATION - SUSPENSION SYSTEM

A. Install suspension system in accordance with ASTM C636/C636M, ASTM E580/E580M, and manufacturer's instructions and as supplemented in this section.

B. Rigidly secure system, including integral mechanical and electrical components, for maximum deflection of 1:360.

C. Locate system on room axis according to reflected ceiling plans.

D. Install after major above-ceiling work is complete. Coordinate the location of hangers with other work.

E. Hang suspension system independent of walls, columns, ducts, pipes and conduit. Where carrying members are spliced, avoid visible displacement of face plane of adjacent members.

F. Where ducts or other equipment prevent the regular spacing of hangers, reinforce the nearest affected hangers and related carrying channels to span the extra distance.

G. Do not support components on main runners or cross runners if weight causes total dead load to exceed deflection capability.

H. Support fixture loads using supplementary hangers located within 6 inches of each corner, or support components independently.

I. Do not eccentrically load system or induce rotation of runners.

J. Perimeter Molding: Install at intersection of ceiling and vertical surfaces and at junctions with other interruptions.
   1. Install in bed of acoustical sealant or with continuous gasket.
   2. Use longest practical lengths.
   3. Miter corners.

K. Install edge moldings and trim of type indicated at perimeter of acoustical ceiling area and where necessary to conceal edges of acoustical panels.
   1. Apply acoustical sealant in a continuous ribbon concealed on back of vertical legs of moldings before they are installed.
   2. Screw attach moldings to substrate at intervals not more than 16 inches (400 mm) o.c. and not more than 3 inches (75 mm) from ends, leveling with ceiling suspension system to a

tolerance of 1/8 inch in 12 feet (3 mm in 3.6 m). Miter corners accurately and connect securely.

3. Do not use exposed fasteners, including pop rivets, on moldings and trim.

L. Form expansion joints . Form to accommodate plus or minus 1 inch movement. Maintain visual closure.

M. Install light fixture boxes constructed of gypsum board or acoustical panel above light fixtures in accordance with fire rated assembly requirements and light fixture ventilation requirements.

N. Suspend ceiling hangers from building's structural members and as follows:

1. Install hangers plumb and free from contact with insulation or other objects within ceiling plenum that are not part of supporting structure or of ceiling suspension system.
2. Splay hangers only where required to miss obstructions; offset resulting horizontal forces by bracing, counter splaying, or other equally effective means.
3. Where width of ducts and other construction within ceiling plenum produces hanger spacings that interfere with location of hangers at spacings required to support standard suspension system members, install supplemental suspension members and hangers in form of trapezes or equivalent devices. Size supplemental suspension members and hangers to support ceiling loads within performance limits established by referenced standards and publications.
4. Secure wire hangers to ceiling suspension members and to supports above with a minimum of three tight turns. Connect hangers directly either to structures or to inserts, eye screws, or other devices that are secure; that are appropriate for substrate; and that will not deteriorate or otherwise fail due to age, corrosion, or elevated temperatures.
5. Do not support ceilings directly from permanent metal forms or floor deck. Fasten hangers to cast-in-place hanger inserts, powder-actuated fasteners, or drilled-in anchors that extend through forms into concrete.
6. Do not attach hangers to steel deck tabs.
7. Do not attach hangers to steel roof deck. Attach hangers to structural members.
8. Space hangers not more than 48 inches (1200 mm) o.c. along each member supported directly from hangers, unless otherwise indicated; and provide hangers not more than 8 inches (200 mm) from ends of each member.

O. Install suspension system runners so they are square and securely interlocked with one another. Remove and replace dented, bent, or kinked members.

P. Install special brake-metal shapes at window heads so that they are square and finished to provide a precise fit. Do not use exposed fasteners.

Q. Install acoustical panels with undamaged edges and fitted accurately into suspension system runners and edge moldings. Scribe and cut panels at borders and penetrations to provide a neat, precise fit.

1. For square-edged panels, install panels with edges fully hidden from view by flanges of suspension system runners and moldings.
2. For reveal-edged panels on suspension system runners, install panels with bottom of reveal in firm contact with top surface of runner flanges.
3. Paint cut panel edges remaining exposed after installation; match color of exposed panel surfaces using coating recommended in writing for this purpose by acoustical panel manufacturer.
4. Install hold-down clips in areas indicated, in areas required by authorities having jurisdiction, and for fire-resistance ratings; space as recommended by panel manufacturer's written instructions, unless otherwise indicated or required.

3.03 INSTALLATION - ACOUSTICAL UNITS

A. Install acoustical units in accordance with manufacturer's instructions.

B. Fit acoustical units in place, free from damaged edges or other defects detrimental to appearance and function.

C. Lay directional patterned units with pattern parallel to longest room axis.

D. Fit border trim neatly against abutting surfaces.

E. Install units after above-ceiling work is complete.

F. Install acoustical units level, in uniform plane, and free from twist, warp, and dents.

G. Cutting Acoustical Units:
   1. Cut to fit irregular grid and perimeter edge trim.
   2. Make field cut edges of same profile as factory edges.
   3. Double cut and field paint exposed reveal edges.

H. Where round obstructions, bullnose concrete block corners, and other similar conditions occur, provide preformed closures to match perimeter molding.

I. Lay acoustical insulation for a distance of 48 inches either side of acoustical partitions.

J. Install hold-down clips on panels within 20 ft of an exterior door, and the following locations:
   1. Locker Rooms
   2. Large Group Toilet Rooms

3.04 TOLERANCES

A. Maximum Variation from Flat and Level Surface: 1/8 inch in 10 feet.

B. Maximum Variation from Plumb of Grid Members Caused by Eccentric Loads: 2 degrees.

END OF SECTION

SECTION 09 5420
SPECIALTY CEILING SYSTEMS

PART 1 GENERAL

1.01 SUMMARY

A. Section Includes:
1. Perforated metal ceiling panels
2. Proprietary composite canopy material.
3. Acoustical backing.
4. Acoustical cloud assemblies.
5. Acoustical canopies.
6. Wood ceiling panels.
7. Translucent ceiling panels.
8. Suspension assemblies
9. Accessories; provide other necessary items including devices for attachment overhead construction, secondary members, splines, splices, connecting clips, wall connectors, wall angles, and other devices required for a complete installation.
10. Coordinate layout and installation of items penetrating or being installed in ceiling systems with responsible trades.

B. Related Sections:
1. Sections 054000 - Cold-Formed metal Framing
2. Sections 092000 - Plaster and Gypsum Board
3. Sections 095100 - Acoustical Ceilings
4. Sections 099000 - Paintings and Coatings
5. Division 23 - Heating, Ventilating and Air Conditioning
6. Division 26 - Electrical

C. This Section covers the general requirements only for SpecialtyCeiling Systems as shown on the drawings. The supplying and installation of additional accessory feature and other items not specifically mentioned herein, but which are necessary to make a complete installation shall also be included or clarified accordingly.

1.02 REFERENCES

A. American Society for Testing and Materials (ASTM)
1. E 84 - “Standard Test Method for Surface Burning Characteristics of Building Materials”
2. E 488 - “Standard Test Methods for Strength of Anchors in Concrete and Masonry Elements”
3. B 209 - “Standard Specification for Aluminum and Aluminum Alloy Sheet and Plate”
4. C 423 - “Sound Absorption and Sound Absorption Coefficients by Reverberation Room Method”
5. E 580 - “Standard Practice for Application of Ceiling Suspension Systems for Acoustical Tile and Lay-in Panels in Areas Requiring Moderate Seismic Restraint”
6. C 635 - “Standard Specification for Metal Suspension Systems for Acoustical Tile and Lay-in Panel Ceilings”
7. C 636 - “Recommended Practice for Installation of Metal Ceiling Suspensions Systems for Acoustical and Lay-in Panels”
8. A 641 - “Standard Specification for Zinc-Coated (Galvanized) Carbon Steel Wire”
9. A 653 - “Standard Specification for Steel Sheet, Zinc-Coated (Galvanized) or Zinc-Iron Alloy Coated (Galvannealed) by the Hot-Dip process.

10. E 1264 - Classification for Acoustical Ceiling Products”
11. E 1477 - Standard Test Method for Luminous Reflectance factor of Acoustical Materials by use of Integrating-Sphere Reflectometers”
12. D 1044 - Practice for Abrasion Resistance
13. D 1002 - Practice for Adhesion Resistance

B. Architectural Woodworking Institute (AWI) and or WIC requirements shall be met for woodworking materials.

C. NEMA Standard 11-14-95 for Chemical Resistance

D. Local Building Code: IBC, current edition requirements

1.03 SUBMITTALS

A. Product Data: Manufacturers product data for each type of product specified in this section.

B. Product Certification: Manufacturer’s certifications that products comply with specified requirements and governing codes including product data, laboratory test reports and research reports showing compliance with specified standards.

C. Shop Drawings: Submit shop drawings for reflected ceiling plans (RCP’s), drawn to scale, and coordinating penetrations and ceiling mounted items. Show the following details:
1. Reflected ceiling plan including joint patterns & details.
2. Metal ceiling suspension system plan with appropriate components, suggested hanger locations & details.
3. Method of attaching suspension system hangers to building structure.
4. Ceiling-mounted items including: light fixtures, air outlets and inlets, speakers, sprinklers, and other interfaces.
5. Special moldings at walls, column penetrations, and other junctures of acoustical ceilings with adjoining construction.
6. Framing and support details for work supported by ceiling suspension system.
7. List of materials, dimensions, hanger fastenings and any special details.
8. Minimum drawing scale: 1/8” = 1’-0”.
9. Provide full scale drawings of perforation patterns. Provide minimum 1”=1’-0” scale layout for each panel type showing perforation layout and orientation as required.
10. Samples for Verification: Full-size units (or as specified below) of each type of ceiling assembly indicated; in sets for each color, texture, and pattern specified, showing the full range of variations expected in these characteristics. Submit samples for each type specified.
    a. 12-inch square, (acoustical) metal pan units.
    b. 12-inch long samples of each exposed molding or trim.
    c. 12-inch long samples of each suspension component.

D. Qualification Data: For firms and persons specified in "Quality Assurance". Provide documents to demonstrate their capabilities and experience. Include lists of at least 5 completed projects with project names and addresses, names and addresses of Architects and employers, and other information specified.

1.04 QUALITY ASSURANCE

A. Installer
1. To certify a minimum 5 years experience installing similar systems and scope to those specified.
2. Provide list of at least 5 successful installations with similar products and scope. Include names and contact numbers of Architect and employer for reference.

B. Manufacturer
   1. To certify a minimum of 5 years experience manufacturing similar products to those specified.
   2. Provide support documentation including name and date of project completion. Include names and contact numbers of Architect and employers for reference.
   3. Manufacturer shall be single source and shall be the fabricator and supplier of appropriate major components.

C. Fire-Test-Response Characteristics: Provide acoustical metal pan ceilings that comply with one of the following requirements:
   1. Fire-response tests performed by UL, ITS/Warnock Hersey, or another independent testing and inspecting agency that is acceptable to authorities having jurisdiction and that performs testing and follow-up services.
   2. Surface-burning characteristics of acoustical metal pan ceilings comply with ASTM E 1264 for Class A materials as determined by testing identical products per ASTM E 84.

D. Mock-Ups: Before releasing acoustical metal ceilings construct mock-ups for each form of construction and finish required to verify selections made under sample submittals and to demonstrate aesthetic effects and qualities of materials and execution. Build mock-up to comply with the following minimum requirements, using materials indicated for completed work:
   1. Locate mock-ups in the location and of the size indicated or, if not indicated, as directed by the Architect. Minimum mock-up size to be 10’x 10’ unless otherwise specified.
   2. Notify Architect seven days in advance of the dates and times when mock-ups will be constructed.
   3. Demonstrate the proposed range of aesthetic effects and workmanship.
   4. Site Coordination Mock-up:
      a. For approval of assembly, sequence of installation, coordination of trades involved, including ceiling panel types and shapes.
      b. Sized large enough to include a minimum of 2 adjacent panels Demonstrating interface work of fire protection sprinklers, lighting, mechanical diffusers, anchoring method at steel structure; adjacent vertical wall; skylight and fascia, trim and accessories.
   5. Obtain Architect’s approval of mock-ups before starting construction of acoustical metal pan ceilings. Submit detailed, ACAD shop drawing illustrating extent and scope of mock-ups. Do not proceed without approval of these drawings.
   6. Maintain mock-ups during construction in an undisturbed condition as a standard for judging the completed work.
      a. When directed, demolish and remove mock-ups from project site
      b. Approved mock-ups in an undisturbed condition at the time of initial Acceptance may become part of the completed work, subject to Architect / Owner approval.

E. Pre-installation Conference: Conduct conference at Project site as directed by the project Architect.

1.05 DELIVERY, STORAGE, AND HANDLING

A. Deliver acoustical metal ceiling units and suspension system components in original, unopened packages clearly labeled with the following information: name of manufacturing source and location; product type, description and quantity; clients name and shipping address.

B. Panel’s protective layer to be removed only after installation is complete to help prevent panel surface damage.

C. Store components in a fully enclosed space where they will be protected against physical damage from direct moisture, significant change in humidity, direct sunlight, significant change in temperature, surface contamination, and any other preventable cause.

D. Exercise care in handling components to prevent damage to the surfaces and edges and prevent distortion or other physical damage. Comply with prescribed stacking instructions to prevent damage to components

1.06 PROJECT CONDITIONS

A. Environmental Limitations
   1. Do not install acoustical metal pan ceilings until after spaces are enclosed and weather tight and after wet work and work above ceilings is complete and accepted by project Architect.
   2. Maintain environmental conditions (temperature, humidity and ventilation) within limits recommended by manufacturer for optimum results. Do not install products under environmental conditions outside manufacturer's absolute limits. Allow materials to reach ambient temperature and humidity for a minimum of 48 hours prior to starting installation.
   3. Coordinate with other work supported by, adjacent to or penetrating through the ceiling system.

B. Do not install products in exterior space unless the system has been specifically designed and approved for exterior application.

1.07 WARRANTY

A. Provide specified manufacturers warranty against defects in workmanship, discoloration, or other defect considered undesirable by the Architect or Owner.

B. This warranty shall remain in effect for a minimum period of five (5) years from date of initial acceptance.

1.08 MAINTENANCE & EXTRA MATERIALS

A. Maintenance Instructions: Provide manufacturers standard maintenance and cleaning instructions for finishes provided.

B. Extra Materials: Furnish extra materials described below that match products installed, are packaged with protective covering for storage, and are identified with labels describing contents. Only typical system components are included with attic stock.
   1. Acoustical Metal Ceiling Pan Units: Full-size units equal to 1½ percent of amount installed.
   2. Ceiling Suspension System Components: Quantity of each grid and exposed component equal to 1½ percent of amount installed.

PART 2 PRODUCTS

2.01 MANUFACTURERS

A. Armstrong World Industries, Inc. - P.O. Box 3001, Lancaster PA 17604. 717.397.0611 - www.armstrongceilings.com.

B. Ceilings Plus - 6711 E. Washington Blvd., Los Angeles, CA 90040. 800-822-3411 - www.ceilingsplus.com.

C. KMDI, Inc. 400 Funston Road, Kansas City, Kansas, 66115; www.kmdi.net.

D. Supply specified item. Specified manufacturer's standard of quality and manufacturing tolerances shall be the criteria for evaluating "equivalent" products. Substitution shall be equal to or of better quality than the specified product in the opinion of the Architect and Owner.

2.02 MATERIALS

A. Metal panels are to be manufactured from single sheets of aluminum selected for surface flatness, smoothness and freedom from surface blemishes where exposed to view in a finished unit. Do not use material where the exposed surface exhibit pitting, seam marks, roller marks, stains, discolorations, or variations in flatness exceeding those permitted by referenced standards for stretcher-leveled aluminum alloy sheets.

B. Metal panel material shall be primed aluminum sheet type 3105 series alloy that has a minimum 70% recycled content. It shall be machine stretcher-leveled and a minimum of .032" thickness, or greater if required, so that the panel deflection does not exceed L/360.

C. Individual linear panels shall be factory attached to torsion spring backer supports (cassette assemblies). Each panel (cassette) assembly shall have minimum of three backer supports for lengths greater than 60", creating a modular panel assembly with minimum ¼" reveals between panel ends.

D. No fasteners of any kind shall be visible on exposed face surfaces of ceiling panels or support tees. Down-light openings, sprinkler holes and miscellaneous penetrations shall be precision factory cut as required.

E. Sound-Absorptive Fabric Layer: Provide manufacturer's acoustic pads sized to fit cavity of linear members and modular panels. Material shall be both non-flammable and sound-absorptive.
   1. Fire Class shall be Class A, with surface-burning characteristics for flame-spread rating of 25 or less and smoke developed rating of 50 or less.. Provide independent accredited lab test results showing compliance with Class A rating as per ASTM E 84.
   2. Achieve absorption value of not less than .70- .80 NRC. Provide independent accredited laboratory test results illustrating compliance with acoustical requirements as per ASTM C 423.
   3. Provide fiberglass absorptive backing panels in sufficient thickness to achieve NRC rating specified.
   4. Acoustical metal panel ceilings to provide recycled "Soundtex" fiber fleece.
   5. Permanently laminate fleece and install acoustical pads to fit the ceiling system.

F. The plenum shall be 100% accessible. Every panel must be removable. Progressive panel access is not acceptable. Heavy duty torsion springs and steel clip assemblies to be mounted to every panel for downward access, without potential for damage to panel face or hinge assembly. Hinge assembly shall be mounted to every panel with minimum two flush to face, counter sunk chamfered fasteners. Attaching torsion spring directly to panel with fastener will not be acceptable.

G. Fire Tests: Complete system test including suspension, primed aluminum and finish shall meet ASTM E 84 Class A.

H. Provide and install matching finish trim on each side of each suspended area.

2.03 SPECIALTY CEILING SYSTEMS

A. TYPE MC: Micro perforated metal ceiling panels with acoustical backing.
   1. Location: Lobby, Auditorium
   2. Products:

a. Basis of design: Armstrong Metalworks DH700 Square edge on concealed grid.

B. TYPE WCP: Perforated fire-retardant particle board ceiling panels with acoustical backing.
1. Products:
a. Basis of design: Armstrong Woodworks Item No. 6480 Square edge on concealed grid.

C. TYPE TCP: Translucent ceiling panels and sheets.
1. Products:
a. Basis of design: Armstrong Infusions Accent Canopies, Series 54051.

D. Ceiling Type ACT-7 - Ceilings Plus “Illusions" - Perforated
1. Panels are to be die formed with a minimum 1 ¼” integral return edge on each of the four panel sides. Steel clips that locate and align panels to the grid with torsion springs, are to be factory machine riveted to the return edge of the panels using counter sunk rivet holes that allow the flat heads of the counter sunk rivets to be flush the face of the panel return. No fasteners of any kind shall be visible on exposed face surfaces of ceiling panels or support tees. Down light openings and other ceiling penetrations shall be factory precision cut whenever viable.
2. Panel material shall be primed aluminum sheet type 3105 series alloy that has a minimum 70% recycled content. It shall be machine stretcher-leveled and a minimum of .032” thickness, or greater if required, so that the panel deflection does not exceed L/360.
3. The panel finish shall be:
a. “Sarante” PVC free, faux wood veneer that is permanently bonded to the aluminum sheet with formaldehyde free, water based adhesive of minimum bond strength of 8 psi @ 25 degrees C.
b. Panel sizes are 48” x 96”.
c. End Profile: Panel end joints are reveal condition unless specified otherwise.
d. Perforation shall be ST14 Panels to have solid non-perforated borders along each of the four sides.

E. Suspended Canopies:
1. Proprietary, lightweight, seamless, fully encapsulated composite material.
2. Product: MicroLite! manufactured by KMDI, Inc. 400 Funston Road, Kansas City, Kansas, 66115; www.kmdi.net.
3. Perferated panels with black acoustic insulation

2.04 METAL SUSPENSION SYSTEMS. GENERAL

A. Metal Suspension Standard: Provide panel manufacturer's metal suspension systems of types, structural classifications, materials, and finishes indicated that comply with applicable ASTM C 635 requirements.
1. Main and cross runners to be Standard “Heavy Duty” tee bar (as per ASTM C 635).
2. Face of main and cross runners to be factory finished matte black unless known otherwise.
3. Face of main runners to be factory slotted to receive torsion springs
4. Provide suspension system made from steel sheet with an average recycled content such that post consumer recycled content plus one half or pre consumer content is not less than 25 percent.

B. Suspension Systems: Provide complete suspensions systems with main runners, cross runners, hangers, trim molding, seismic retention clips, load resisting struts and other suspension components required to support ceiling and other ceiling supported construction.

C. Attachment Devices: Size for five times design load indicated in ASTM C 635, Table 1, “Direct-Hung”, unless otherwise indicated.
   1. “Direct-Hung” Suspensions Systems: System composed of main runners supported by hangers attached directly to building structure.

D. Hangers: Type and metal standard with ceiling system manufacturer, sized to comply with structural classification indicated.
   1. Wire Hangers, where applicable, Braces, and Ties: Provide wires complying with the following requirements:
      a. Zinc-Coated Carbon-Steel Wire: ASTM A 641 (ASTM A 641M), Class 1 zinc coating, soft temper.
      b. Size: Select wire diameter so its stress at three times hanger design load (ASTM C 635, Table 1, Direct Hung) will be less than yield stress of wire, but provide not less than 2mm diameter wire.
      c. Extruded Aluminum members shall comply with ASTM B209.
   2. Hanger Rods: Mild steel, zinc coated or protected with rust-inhibitive paint.
   3. Flat Hangers: Mild steel, zinc coated or protected with rust-inhibitive paint.
   4. Angle Hangers: Angles with legs not less than 22mm wide, formed with 1mm thick, galvanized steel sheet complying with ASTM A 653/A 653M, G90 coating designation, with bolted connections.

PART 3- EXECUTION

3.01 EXAMINATION

A. Examine substrates and structural framing to which acoustical metal panels attach or abut, with Installer present, for compliance with requirements specified in this and other Sections that affect installation and anchorage, and other conditions affecting performance of metal panel ceilings.

B. Proceed with installation only after unsatisfactory conditions have been corrected.

3.02 PREPARATION

A. Coordination: Furnish layouts for cast-in-place anchors, clips, and other ceiling anchors whose installation is specified in other Sections.

B. Measure each ceiling area and establish layout of acoustical metal pan units to balance border widths at opposite edges of each ceiling. Avoid using less-than-half-width units at borders, and comply with layout shown on reflected ceiling plans.

C. Survey substrate for wall attachment to assure squareness and proper elevation for wall panel installation.

3.03 INSTALLATION

A. General: Install acoustical metal pan ceilings, per manufacturers shop drawings provided, per manufacturer's written instructions and to comply with publications referenced below.
   1. ClSCA "Ceiling Systems Handbook.
   2. Standard for Ceiling Suspension System Installations - ASTM C 636.
   3. Standard for Ceiling Suspension Systems Requiring Seismic Restraint - ASTM E 580
   4. IBC (International Building Code) standard for Seismic Zone for local area.

B. Suspend ceiling hangers from building's approved structural substrates and as follows:
   1. Install hangers plumb and free from contact with insulation or other objects within ceiling plenum that are not part of supporting structure or of ceiling suspension system.

2. Splay hangers only where required to miss obstructions; offset resulting horizontal forces by bracing, counter-splaying, or other equally effective means.
3. Where width of ducts and other construction within ceiling plenum produce hanger spacings that interfere with location of hangers at spacing required to support standard suspension system members, install supplemental suspension members and hangers in form of trapezes or equivalent devices. Size supplemental suspension members and hangers to support ceiling loads within performance limits established by referenced standards and publications.

C. Where used secure wire hangers to ceiling suspension members and to supports above with a minimum of three tight turns. Connect hangers directly either to structures or to inserts, eye screws, or other devices that are secure; that are appropriate for substrate; and that will not deteriorate or otherwise fail due to age, corrosion, or elevated temperatures.

D. Space hangers not more than 48 inches on center, along each member supported directly from hangers, unless otherwise indicated; and provide hangers not more than 8 inches from ends of each member. Supply supporting calculations from licensed Structural Engineer verifying hanger spacing meets all requirements, when spacing exceed those recommended.

E. Fine level grid to 1/8 inch in 10 feet from specified elevation(s), square and true.

F. Adjust suspension system runners so they are square (within .5 degree from 90 degrees) and securely interlocked with one another. Remove and replace dented, bent, or kinked members.

G. Secure bracing wires to ceiling suspension members and to supports acceptable to Architect / Engineer and or inspector. Suspend bracing from building's structural members and / or structural deck, as required for hangers, without attaching to permanent metal forms, steel deck, or steel deck tabs(unless directed otherwise).

H. Install edge moldings and trim of type indicated at perimeter of acoustical ceiling area and where necessary to conceal edges of acoustical metal pan. Method of edge trim attachment and design of edge trims to be approved by Architect
   1. Screw attach moldings to substrate at intervals not more than 18” O.C. and not more than 6” from ends, leveling with ceding suspension system to a tolerance of 1/8” in 10’. Miter corners accurately and connect securely.
   2. Do not use exposed fasteners, including pop rivets, on moldings and trim without prior written approval.

I. Scribe and cut acoustical metal panel units for accurate fit at penetrations by other work through ceilings. Stiffen edges of cut units as required to eliminate evidence of buckling or variations in flatness exceeding referenced standards for stretcher-leveled metal sheet.

J. Install acoustical metal panel units in coordination with suspension system.
   1. Align joints in adjacent courses to form uniform, straight joints parallel to room axis in both directions, unless otherwise indicated. Install directionally patterned or textured panels in directions indicated on approved shop drawings. Panel-joints shall flow smoothly and in a straight line within 1/8” in 10’. Intersections shall be continuous.
   2. Fit adjoining units to form flush, tight joints. Scribe and cut units for accurate fit at borders and around construction penetrating ceiling.
   3. Remove protective film from panels only when space is completely clean and free of airborne particles. Use white cotton gloves for final installation of panels into grid system.

3.04 ADJUSTING AND CLEANING

A. Adjust ceiling components to provide a consistent finish and appearance in conformity with established tolerances and requirements.

B. Clean exposed surfaces of acoustical metal panel ceilings and walls. Comply with manufacturer's written instructions for cleaning and touchup of minor finish damage.

C. Remove and replace work that cannot be successfully cleaned and repaired to permanently eliminate evidence of damage, including dented and bent units.

END OF SECTION

SECTION 09 6429
WOOD STRIP FLOORING

PART 1 GENERAL

1.01 SECTION INCLUDES

A. Wood strip flooring, nailed:
   1. Athletic wood flooring over resilient sleeper system at HS and MS Gymnasium.

B. Hardboard flooring over resilient sleeper system and accessories at Auditorium Stage, Studio Theater, and Practice Rooms.

C. Secondary subflooring.

D. Resilient sleepers system.

E. Sheet vapor retarder.

F. Wall base.

G. Surface finishing and game markings.

H. Protective covering.

1.02 RELATED REQUIREMENTS

A. Section 03 3000 - Concrete: Recessed concrete subfloor surface and formed depressions for deep floor sockets, inserts, and installation of vapor barrier.

B. Section 07 2616 - Under-slab Vapor Barrier: Vapor barrier material installed below concrete slab.

1.03 REFERENCE STANDARDS

A. MFMA (SPEC) - Guide Specifications for Maple Flooring Systems; Maple Flooring Manufacturers Association; current edition.

B. MFMA PUR - Performance Uniformity Requirements

C. ASTM E 96 - Standard Test Methods for Water Vapor Transmission of Materials

D. APA - Plywood product standards; Plywood design specification; Plywood as a resilient floor underlayment; Steps to construct a solid, squeak-free floor system;

E. DIN – Performance Standard 18032 Part 2

F. MFMA - Floor Finish List and Specifications

G. MFMA - Grading Rules

H. WSFI - Recommendations for the Correct Preparation, Finishing, and Testing of Concrete Subfloor Surfaces to Receive Wood Flooring.

1.04 SUBMITTALS

A. See Section 01 3000 - Administrative Requirements, for submittal procedures.

B. Submit the following for approval prior to placing materials orders, any fabrication, or installation:
   1. Manufacturer's product data sheets, specifications, performance data for each type of wood flooring and finish system materials, with manufacturer's installation instructions and recommended maintenance procedures.
   2. Wood flooring and finish system manufacturers' standard written guarantees covering defects in materials and workmanship, clearly defining the terms included in the coverage.

3. Submit 1 electronic copy of shop drawings for review. Fabrication shall not commence until the Theatre Consultant and the Architect determine that the shop drawings are in compliance with the design intent of the Contract Documents. Shop drawings shall be revised and resubmitted as required.

C. Shop drawings shall include the following:
1. Measured plan drawing indicating all critical dimensions. Field verify all dimensions prior to installation.
2. Measured plan indicating placement of sleepers and staggering of substrate and surface layers as related to sleeper placement.
3. Section showing base, and section showing transitions with abutting flooring materials.
4. Details indicating expansion provisions.
5. Indicate location, size, design, and color of game markings.

D. Construction sample: Provide a finished 24 by 24 inch section of completed flooring utilizing actual system, demonstrating actual materials and finish coats.
1. Submit one sample for each type of finish and alternate finish specified, for final selection.

E. Installation Instructions: Indicate standard and special installation procedures.

F. Maintenance Data: At the completion of the installer's work, provide 3 copies of a maintenance data binder, 2 for the owner and one for the Theatre Consultant. Binders shall include manufacturer's product data for all materials used in the floor construction and finishing, manufacturer's recommended maintenance procedures, and recommended maintenance materials. Materials shall be provided in printed and electronic (PDF) versions and bound in a three-ring binder and adequately labeled. Provide the electronic copies on thumb drives.

1.05 QUALITY ASSURANCE

A. Perform work of this section in accordance with MFMA (SPEC).

B. Manufacturer Qualifications: Company specializing in manufacturing products specified in this section with minimum three years documented experience.

C. Installer qualifications:
1. An experienced installer who has completed stage/athletic flooring similar in material, design, and extent to that indicated for this Project and whose work has resulted in flooring installations with a record of successful in-service performance.
2. Installer should cite references with contact information from previous stage/athletic flooring installations.
3. Installer specializing in applying the work of this Section with a minimum of 5 years documented experience of the type of flooring system specified.
4. Installer shall perform work in accordance with APA and MFMA standards.

D. Single Subcontractor Responsibility: Subcontract entire floor system to a single firm for undivided responsibility. Obtain flooring of each type from single manufacturer or source, to ensure match of color, pattern, texture and quality.

1.06 FIELD CONDITIONS

A. Do not install wood flooring until wet construction work is complete and ambient air at installation space has moisture content stabilized at maximum moisture content of 40 percent.

B. Provide heat, light, and ventilation prior to installation.

C. Store materials in area of installation for minimum period of 24 hours prior to installation.

D. Maintain minimum room temperature of 65 degrees F for a period of two days prior to delivery of materials to installation space, during installation, and after installation.

PART 2 PRODUCTS

2.01 FLOOR SYSTEMS

A. Manufacturers: Subject to compliance with the requirements specified herein, manufacturers offering products which may be incorporated in the work include the following:
   1. Basis of Design: Robbins, Inc., Wausau, WI: www.robbinsfloor.com.
   2. Subject to compliance with requirements, the products by the following manufacturers are also acceptable:
      a. Horner Flooring Company, Inc., Dollar Bay, MI,
      b. Aacer Sports Flooring, Peshtigo, WI,
   3. Substitutions: See Section 01 6000 - Materials and Equipment.

B. Gymnasium Flooring (High School):
   1. Basis-of-Design Product: Subject to compliance with requirements, provide Robbins, Inc., product “Bio-Channel Classic”. Other approved manufacturers include:
      a. Horner Flooring Company, Inc., Dollar Bay, MI, “Multi-Purpose Channel”, “low profile” version
      b. Aacer Sports Flooring, Peshtigo, WI, “Anchored Power Sleeper SE”
   2. Strip Flooring
      a. Northern hard maple, 2-1/4” (57mm) width x 25/32” (20mm) thick, 2nd & Better, T&G and end matched, kiln dried, random length.
      b. Preservative treatment: Clear, penetrating, water-repellant wood preservative that protects against mold, mildew, stainingand decay fungi; complying with MFMA's written recommendations and applied by imersion.
   3. Subfloor:
      a. 23/32” (18mm) Structural rated sheathing, Exposure 1 (CD-X).
   4. Flooring Channels: Resilient channels consisting of a 1-1/2 by 2-5/8 inch wood engineered wood sleeper with EPDM cushion attached, factory encased in a steel channel. Sleeper must be free to move vertically within steel channel confines to assure proper uniformity of resiliency and function.
      a. EPDM Cushion: minimum 7/16 inch (11 mm) thick double-trapezoidal shaped EPDM rubber with reverse cavity having non-coextensive lower and upper surfaces.
   5. Channel Anchors: Manufacturer's standard, min. 900 lb. pull-out.
   6. Vapor barrier: 6-mil polyethylene.
   7. Finishing Materials
      a. Oil modified polyurethane sealer and finish.
      b. Gameline paint shall be recommended by the finishing materials manufacturer and be compatible with the finish.

C. Gymnasium Flooring (Middle School):
   1. Basis-of-Design Product: Subject to compliance with requirements, provide Robbins, Inc., product “Bio-Channel Star” or equivalent product by one of the following manufacturers:
      a. Horner Flooring Company, Inc.
      b. Aacer Sports Flooring
   2. Strip Flooring
      a. Northern hard maple, 2-1/4” (57mm) width x 25/32” (20mm) thick, 2nd & Better, T&G and end matched, kiln dried, random length

b. Preservative treatment: Clear, penetrating, water-repellant wood preservative that protects against mold, mildew, stainingand decay fungi; complying with MFMA's written recommendations and applied by imersion.

3. Subfloor:
   a. Nominal 3/4" x 24" x 96" subfloor sheathing with factory-prepared anchor slots.
4. Resilience Layer: 9/16" Profiled Zero/G Shock Pad.
5. Vapor barrier: 6-mil polyethylene
6. Anchors: Metal channel with anchor spike.
7. Finishing Materials
   a. Oil modified polyurethane sealer and finish.
   b. Gameline paint shall be recommended by the finishing materials manufacturer and be compatible with the finish.

D. Stage Floor:
1. Basis-of-Design Product: Subject to compliance with requirements, provide Robbins, Inc., product "Bio-Channel Classic". Other approved manufacturers include:
   a. Horner Flooring Company, Inc.; Multi-Purpose Channel", "low profile" version
   b. Aacer Sports Flooring; Anchored Power Sleeper SE"
2. Flooring: 1/4 inch nominal thickness wet-dry process, S2S (smooth two sides), oil-tempered hardboard.
   a. Manufacturer's reference:
      1) S2S Phenolic Bonded Hardboard Panel, Georgia Pacific, Philips, WI Plant
      2) Signature S2S Panel, Decorative Panels International, Toledo, Ohio
      3) Smooth Two Sides Hardboard Panel, D&M Lumber Products Co, Brooklyn, NY
3. Paper slip sheet: Red Rosin Paper. Install between subfloor and hardboard.
4. Subflooring: 2 layers 3/4 inch nominal thickness EWA rated STURD-I-FLOOR, tongue and groove plywood, exposure durability classified, EXPOSURE I , touch-sanded.
5. Flooring Channels: Resilient channels consisting of a 1-1/2 by 2-5/8 inch wood engineered wood sleeper with EPDM cushion attached, factory encased in a steel channel. Sleeper must be free to move vertically within steel channel confines to assure proper uniformity of resiliency and function.
   a. EPDM Cushion: minimum 7/16 inch (11 mm) thick double-trapezoidal shaped EPDM rubber with reverse cavity having non-coextensive lower and upper surfaces.
6. Vapor Retarder: Black polyethylene sheet, 6 mil thick; 2 inch wide tape for joint sealing.
7. Fasteners:
   a. Channel anchors: Minimum 1-1/4 inch (35mm) long steel power driven shot anchors, as required to penetrate and be retained in concrete with appropriate size charge for securing wood sleepers to concrete. Longer anchors may be required depending on shim thickness. Anchors shall be driven through predetermined anchor holes in resilient channel and shall be driven through the shimming material.
   b. Subflooring: Ring or screw-type subflooring nails, or other fasteners as recommended by the flooring manufacturer, for plywood to plywood attachment.
   c. Hardboard: Flat head wood screws, 1 1/4 inches long, countersunk into hardboard sheet. Fasteners shall be anodized black.

2.02 ACCESSORIES

A. Wall base:
1. Stage and Studio Theater: Steel angle base, 4 by 4 inches. Base shall be securely attached to wall to withstand an upwards load of 50 pounds per linear foot. A gap between the base

and the wall shall be maintained at one-quarter of an inch by bushings to allow for venting.

2. Gymnasium, Heavy duty, molded, 3:" x 4" vented cove base with pre-molded outside corners.

B. Expansion Strip: Serviced Products neoprene rubber, produced and recommended for this use. Material shall be firm enough to resist abuse and compression, but suitably compressible to permit floor expansion. Provide continuously full depth of floor and subfloor at juncture of floor to vertical surface not covered by base or threshold.

C. Shim Strips:
   1. Plywood or hardwood shim strips. Thickness as required to achieve overall system thickness and levelness. Type as recommended by manufacturer.
   2. If required buildup is less than 2”, resilient channel shall be anchored to the concrete through the shims.
   3. If required buildup exceeds 2”, shims shall be anchored to the concrete independently from resilient channel and channel shall be attached to shims using a #14 deck screw, or as recommended by the manufacturer. Shims shall be 4 inches by 4 inches minimum.

D. Filler for patching, smoothing and leveling subfloors and underlayment: Portland cement-based latex underlayment acceptable to flooring manufacturer, equal to the following:
   1. Ardex, Inc., products “Feather Flash” and “Ardex SD-P”.
   2. Quikrete Companies, product “Fast-Set Underlayment 1248”.
   3. Silpro Masonry Systems Inc., product “Masco Latex Cement”.

PART 3 EXECUTION

3.01 EXAMINATION

A. Verify concrete substrate has cured for at least 60 days. Test concrete with 3 percent solution of phenolphtalein in grain alcohol for dryness. Do not proceed with installation until substrate passes dryness test, immediately notify Architect of unacceptable substrate conditions.

B. Verify that permanent heat, light, and ventilation is complete and operational prior to installation.

C. Inspect all substrate surfaces and verify that they are in proper condition to receive the work of this Section. Verify that concrete substrate surfaces are smooth and flat to plus or minus 1/8 inch over a radius of 10 feet, free of scaling, oil, grease, dust, and foreign substance.

D. All discrepancies shall be reported in writing.

E. Commencement of installation means acceptance of site conditions by the installer.

3.02 PREPARATION

A. Comply with flooring manufacturer’s requirements for preparation of substrate to receive wood flooring.

B. Remove sub-floor ridges and bumps. Fill minor or local low spots, cracks, joints, holes, and other defects with subfloor filler to achieve smooth, flat, hard surface. Prohibit traffic until filler is cured.

C. Thoroughly vacuum clean all receiving surfaces before commencing installation work.

D. Open bundles of flooring, and permit the pieces to properly acclimatize prior to installing same.

3.03 SLEEPER INSTALLATION

A. Install in accordance with manufacturer’s instructions.

B. Install polyethylene vapor barrier with joints lapped a minimum of 6 inches.

C. Place resilient sleepers 16 inches on center, end to end, staggering end joints in adjacent rows. Anchor channels at predetermined locations using power actuated or pneumatic anchoring methods. Sleepers will be placed perpendicular to the proscenium opening or the intended direction of the hardboard, where applicable.

D. Install acoustical insulation between sleeper channels and at expansion voids as shown on architectural plans.

E. Install first layer of plywood subfloor with 4-foot edges parallel to sleeper channels and secure 6 inches on center into channel sleepers. The ends of the sheets shall land on sleepers. Install second layer of plywood subfloor at 90 degrees to first layer.

F. Install plywood with a 1/16” gap on non-grooved sides and 1/8” gap on grooved sides, between sheets to allow for expansion of the material.

G. Sheathing Paper: Place over wood subfloor; lap edges and ends 2 inches, staple in place.

3.04 WOOD STRIP FLOORING INSTALLATION:

A. Install in accordance with manufacturer's, MFMA, and NOFMA instructions; predrill and blind nail to sleepers.

B. Lay flooring parallel to length of room areas. Verify alignment as work progresses.

C. Arrange flooring with end matched grain set flush and tight.

D. Terminate flooring at centerline of door openings where adjacent floor finish is dissimilar; provide divider strips and transition strips in accordance with flooring manufacturer's recommendations and as indicated..

E. Install edge strips at unprotected or exposed edges, and where flooring terminates.

F. Secure edge strips before installation of flooring with stainless steel screws.

G. Install flooring tight to floor access covers.

H. Provide 2 inch expansion space at fixed walls and other interruptions.

I. Finishing:
   1. Mask off adjacent surfaces before beginning sanding.
   2. Sand flooring to smooth even finish with no evidence of sander marks. Take precautions to contain dust. Remove dust by vacuum.
   3. Apply finish in accordance with floor finish manufacturer's instructions.
   4. Apply filler and three finish coats.
   5. Apply first coat, allow to dry, then buff lightly with steel wool to remove irregularities. Vacuum clean and wipe with damp cloth before applying succeeding coat.
   6. Lightly buff between coats with steel wool and vacuum clean before applying succeeding coat.
   7. Apply colored game lines 2 inches wide and logo to layout indicated on drawings.
   8. Apply last coat of finish.

3.05 HARDBOARD FLOORING INSTALLATION

A. Hardboard shall be laid with 8-foot edges parallel to proscenium and perpendicular to bio-channel.

B. Install hardboard with a 1/16” gap on all sides between sheets to allow for expansion of the material.

C. Fasten hardboard with screws spaced at 6 inches on center along edges, and 12 inches within the panels. Hold back screws from perimeter of the room so that they are accessible when the base is installed.

D. Unless otherwise indicated, lay flooring symmetrical about proscenium or room centerline, as applicable. Fit neatly to vertical interruptions. Provide for expansion at vertical surfaces.

E. Install wood subfloor so that it is properly secured, is smooth and flat to plus or minus 1/8 inch in a radius of 10 feet, and is free of foreign substances.

F. After installation, but prior to finishing, verify the finished surface is smooth and flat to plus or minus 1/8 inch in a radius of 10 feet, via laser guided survey. Provide the survey information to the Architect and the Theatre Consultant.

G. Hardboard Finishing:
   1. Allow installed floor to acclimate to ambient conditions for at least 10 days before finishing. Protect finish surface during this period against damage and wear with tarps or other sacrificial coverings.
   2. Mask off adjacent surfaces and take precautions to contain fumes.
   3. Thoroughly vacuum-clean all surfaces and other finish surfaces within space, clean surfaces completely free from dust, and dry-mop with a tack cloth-clad mop.
   4. Hardboard flooring shall be finished with:
      a. Primer: One coat of Zinsser Bull's Eye 1-2-3, Deep Tint Base (02030) - Lamp Black universal colorant, maximum amount recommended by manufacturer or 6 fl. Oz per gallon, whichever is greater.
      b. Topcoat: Two coats of Coronado Paint SuperKote 5000 Acrylic Traffic Marking Paint (66) - Matte Black

H. Alternate hardboard flooring finish (1):
   1. Primer: One coat of Pittsburgh Paints SEALGRIP 100% Acrylic Universal Primer-Sealer (17-922), Deep Tint Base - Lamp Black universal colorant, maximum amount recommended by manufacturer or 6 fl. Oz per gallon, whichever is greater.
   2. Topcoat: Two coats of California Paints Wear-All Multi-Purpose Acrylic Latex Enamel (528XX) Deep Tint Base - Lamp Black universal colorant, maximum amount recommended by manufacturer or 6 fl. Oz per gallon, whichever is greater.

I. Alternate hardboard flooring finish (2):
   1. Primer: One coat of Zinsser Bull's Eye 1-2-3, Deep Tint Base (02030) - Lamp Black universal colorant, maximum amount recommended by manufacturer or 6 fl. Oz per gallon, whichever is greater.
   2. Finish and Top Coats: Two coats of Benjamin Moore Latex Floor and Patio Enamel (122), Matte Finish - Lamp Black universal colorant, maximum amount recommended by manufacturer or 6 fl. Oz per gallon, whichever is greater.
   3. Allow each coat to completely dry, as per manufacturer's recommendations and ambient conditions, prior to application of next coat.

3.06 CLEANING

A. Clean and polish floor surfaces in accordance with manufacturer's instructions.

3.07 PROTECTION

A. Prohibit traffic on floor finish for 5 days after installation.

B. Place protective coverings over finished floors; do not remove coverings until Substantial Completion.

1. Protect flooring against damage and wear with red rosin paper with taped joints during remainder of construction period to ensure that flooring and finish are without damage or deterioration at time of substantial completion.

3.08 COMMISSIONING

A. The Contractor shall work with the General Contractor or Construction Manager to arrange for a commissioning period for the work in this Section. The commissioning period shall take place at least 2 months before the first scheduled rehearsal onstage.

3.09 OWNER'S ACCEPTANCE

A. The Owner will accept the work in this Section upon the satisfactory completion of all punch list items.

B. Prior to final acceptance, the Owner reserves the right to use any completed portion of the work in this Section at no additional cost, unless said use poses a potential hazard to personnel or risks damage to the work in this Section or the work of others.

C. The Warranty period shall commence upon final acceptance by the Owner.

END OF SECTION

SECTION 09 6500
RESILIENT FLOORING

PART 1 GENERAL

1.01 SECTION INCLUDES

A. Resilient sheet flooring.

B. Resilient tile flooring.

C. Luxury Vinyl Tile

D. Resilient base.

E. Resilient stair accessories.

F. Installation accessories.

1.02 RELATED REQUIREMENTS

A. Section 09 0561 - Common Work Results for Flooring Preparation: Independent agency testing of concrete slabs, removal of existing floor coverings, cleaning, and preparation.

1.03 REFERENCE STANDARDS

A. ASTM F1303 - Standard Specification for Sheet Vinyl Floor Covering with Backing; 2004 (Reapproved 2014).

B. ASTM F1700 - Standard Specification for Solid Vinyl Floor Tile; 2013a.

C. ASTM F1861 - Standard Specification for Resilient Wall Base; 2008 (Reapproved 2012).

D. ASTM F1913 - Standard Specification for Vinyl Sheet Floor Covering Without Backing; 2004 (Reapproved 2014).

E. ASTM F2034 - Standard Specification for Sheet Linoleum Floor Covering; 2008 (Reapproved 2013).

1.04 SUBMITTALS

A. Product Data: Provide data on specified products, describing physical and performance characteristics; including sizes, patterns and colors available; and installation instructions.

B. Shop Drawings: Indicate seaming plans and floor patterns.

C. Selection Samples: Submit manufacturer's complete set of color samples for Architect's initial selection.

D. Verification Samples: Submit two samples, 6 by 6 inch in size illustrating color and pattern for each resilient flooring product specified.

E. Maintenance Materials: Furnish the following for Owner's use in maintenance of project.

1. Extra Flooring Material: 100 square feet of each type and color.

1.05 DELIVERY, STORAGE, AND HANDLING

A. Upon receipt, immediately remove any shrink-wrap and check materials for damage and the correct style, color, quantity and run numbers.

B. Store all materials off of the floor in an acclimatized, weather-tight space.

C. Maintain temperature in storage area between 55 degrees F and 90 degrees F.

D. Protect roll materials from damage by storing on end.

E. Do not double stack pallets.

1.06 FIELD CONDITIONS

A. Store materials for not less than 48 hours prior to installation in area of installation at a temperature of 70 degrees F to achieve temperature stability. Thereafter, maintain conditions above 55 degrees F.

PART 2 PRODUCTS

2.01 SHEET FLOORING

A. Vinyl Sheet Flooring - Type SV-1: Homogeneous without backing, with color and pattern throughout full thickness.
   1. Manufacturers:
      a. Armstrong, Medintech Color Art Diamond 10.
   2. Minimum Requirements: Comply with ASTM F1913.
   3. Thickness: 0.080 inch nominal.

B. Linoleum Sheet Flooring: Homogeneous wear layer bonded to backing, with color and pattern through wear layer thickness.
   1. Manufacturers:
      a. Forbo Flooring, Inc; Marmoleum Real: www.forboflooringna.com.
   2. Minimum Requirements: Comply with ASTM F2034, Type corresponding to type specified.
   3. Backing: Jute fabric.
   4. Thickness: 0.100 inch, minimum, excluding backing.

2.02 TILE FLOORING

A. Vinyl Enhanced Tile: Types RT-1, RT-2, RT-3, RT-4, RT-5:
   1. Product: Color Essence by Johnsonite
   2. Complies with requirements for ASTM F 1066, Class 3 (Surface Pattern) Standard Specification for Vinyl Composition Floor Tile
   3. Wear layer/Overall thickness: 1/8" (3.2 mm)
   4. Tile size: 12" x 12" (30.5 x 30.5 cm)
   5. Slip Resistance: ADA Compliant
   6. Polyurethane Reinforced wear surface with Tritonite Finish
   7. ASTM F 970, Standard Test Method for Static Load Limit - 400 PSI (modified for higher load)
   8. ASTM E 648, Standard Test method for Critical Radiant Flux of 0.45 watts/cm2 or greater, Class I
   9. Warranty: 10 year Manufacturer's Warranty
   10. Vinyl Enhanced Tiles contain 23% pre-consumer and 6% post-consumer recycled content
   11. Phthalate-free
   12. 100% Recyclable

B. Luxury Vinyl Tile: Printed film type, with transparent or translucent wear layer.
   1. Manufacturers:
      a. Armstrong.
      b. Mohawk
      c. Toli
   2. Minimum Requirements: Comply with ASTM F1700, of Class corresponding to type specified.
   3. Wear Layer Thickness: 0.020 inch.
   4. Total Thickness: 0.125 inch.

2.03 STAIR COVERING

A. Stair Treads: Rubber; full width and depth of stair tread in one piece; tapered thickness.
   1. Manufacturers:
      a. Burke Flooring: www.burkeflooring.com.
      b. Johnsonite, a Tarkett Company: www.johnsonite.com.
      c. Roppe Corp: www.roppe.com.
   2. Nosing: Square.

B. Stair Risers: Full height and width of tread in one piece, matching treads in material and color.
   1. Manufacturers:
      a. Burke Flooring: www.burkeflooring.com.
      b. Johnsonite, a Tarkett Company: www.johnsonite.com.
      c. Roppe Corp: www.roppe.com.
   2. Thickness: 0.080 inch.

2.04 RESILIENT BASE

A. Resilient Base Type RB-1, RB-2, RB-3, RB-4: ASTM F1861, Type TS rubber, vulcanized thermoset; top set Style B, Cove.
   1. Manufacturers:
      a. Johnsonite, a Tarkett Company: www.johnsonite.com.
   2. Height: 4 inch.
   3. Thickness: 0.125 inch.
   4. Finish: Satin.

B. Millwork Rubber Base, Type MRB-1, MRB-2:
   1. ASTM F-1861 Standard Specification for Resilient Wall Base, Type TP, and Group 1.
   2. Johnsonite Reveal 4-1/4" (MW-XX-F) 1/4" (.25", 6.35mm) thick by 4-1/4" (10.8cm) height with a 45° angular top and a 7/32” (5.5mm) wide surface reveal, 8 per carton, 8 ft lengths, 64 ft (19.5m) per carton, 50 lbs (22.7kg) per carton

2.05 ACCESSORIES

END OF SECTION

SECTION 09 6566
RESILIENT ATHLETIC FLOORING

PART 1 GENERAL

1.01 SECTION INCLUDES

A. Rubber tile flooring, adhesively installed.

B. Accessories.

1.02 RELATED REQUIREMENTS

A. Section 03 3000 - Cast-in-Place Concrete: Restrictions on curing compounds for concrete slabs and floors.

1.03 REFERENCE STANDARDS

A. ASTM F710 - Standard Practice for Preparing Concrete Floors to Receive Resilient Flooring; 2011.

1.04 SUBMITTALS

A. Product Data: Manufacturer's printed data sheets for products specified.

B. Selection Samples: Manufacturer's color charts for flooring materials specified and game line paints, indicating full range of colors and textures available.

1.05 QUALITY ASSURANCE

A. Installer Qualifications: An experienced installer certified in writing by the flooring manufacturer to be qualified for installation of specified flooring system.

1.06 DELIVERY, STORAGE, AND HANDLING

A. Deliver materials to project site in unopened containers clearly labeled with manufacturer's name and identification of contents.

B. Store materials in dry and clean location until needed for installation. During installation, handle in a manner that will prevent marring and soiling of finished surfaces.

1.07 FIELD CONDITIONS

A. Maintain temperature in spaces to receive adhesively installed resilient flooring within range of 70-95 degrees F for not less than 48 hours before the beginning of installation and for not less than 48 hours after installation has been completed. Subsequently, do not allow temperature in installed spaces to drop below 50 degrees F or to go above 100 degrees F.

PART 2 PRODUCTS

2.01 PREFORMED ATHLETIC FLOORING

A. RESILIENT SPORTS FLOORING, Type RSP-1Product: Sport Flex M as manufactured by Mondo; www.mondousa.com.
   1. Two layers vulcanized together.
      a. Shore hardness of the top layer will be greater than that of the bottom layer.
      b. Shore hardness of layers to be recommended by the Manufacturer and the limits specified
   2. Thickness: 0.394 in. (10 mm).
   3. Colors: Selected from standard, solid background colors.
   4. Surface Texture: ATS embossing.

B. RUBBER GYM FLOOR, Typr RGF-1: Prefabricated resilient rubber athletic flooring, calendered and vulcanized with a base of natural and synthetic rubbers, stabilizing agents and pigmentation. as manufactured by Mondo Luxembourg S.A. or approved equal.
   1. Product: Advance Vulcanized as manufactured by Mondo Luxembourg S.A.
      a. Phthalate-free, halogen-free, heavy metal-free, formaldehyde-free, isocyanate-free and BPA-free.
   2. Thickness: 0.394’’ (10mm).
   3. Colors: Selected from standard, solid background colors with random marbleization throughout wear layer.
   4. Surface Texture: Smooth.
   5. Manufactured in three layers which are vulcanized together. The shore hardness of the top layer will be greater than that of the other layers; shore hardness of layers to be recommended by the Manufacturer and the limits specified.

C. Rubber Tile Flooring: Virgin rubber material formed into square tiles , laid with adhesive.
   1. Thickness: Minimum 1/4 inch.
   2. Size: Nominal 18 inch square.
   3. Surface Texture: Smooth.
   4. Color: As selected from manufacturer's standards.

2.02 ACCESSORIES

A. Leveling Compound: Latex-modified cement formulation as recommended by flooring manufacturer for substrate conditions.

PART 3 EXECUTION

3.01 EXAMINATION

A. Examine substrates for conditions detrimental to installation of athletic flooring. Proceed with installation only after unsatisfactory conditions have been corrected.

B. Verify that surfaces are flat to tolerances acceptable to flooring manufacturer, free of cracks that might telegraph through flooring, clean, dry, and free of curing compounds, surface hardeners, and other chemicals that might interfere with bonding of athletic flooring to substrate.

C. Cementitious Sub-floor Surfaces: Verify that substrates are dry enough and ready for resilient flooring installation by testing for moisture and pH.
   1. Test in accordance with ASTM F710.
   2. Obtain instructions if test results are not within limits recommended by resilient flooring manufacturer and adhesive materials manufacturer.

D. Verify that concrete sub-floor surfaces are dry enough and ready for resilient flooring installation by testing for moisture emission rate and alkalinity in accordance with ASTM F710; obtain instructions if test results are not within limits recommended by resilient flooring manufacturer and adhesive materials manufacturer.

3.02 PREPARATION

A. Prepare floor substrates as recommended by flooring and adhesive manufacturers.

B. Concrete: Use leveling compound as necessary to achieve substrate flatness of plus or minus 1/8 inch within 10 ft radius.

C. Remove coatings that are incompatible with flooring adhesives, using methods recommended by flooring manufacturer.

D. Broom clean areas to receive athletic flooring immediately before beginning installation.

3.03 INSTALLATION

A. Starting installation constitutes acceptance of sub-floor conditions.

B. Comply with manufacturer's recommendations.

C. Rubber Tile Flooring:

1. Lay out center lines in spaces to receive tile flooring, based on location of principal walls. Start tile installation from center, and adjust as necessary to avoid tiles less than one-half width at perimeter.
2. Lay tiles square with room axis, matching for color and pattern by selecting from cartons and mixing as recommended by manufacturer.

3.04 CLEANING

A. Clean flooring using methods recommended by manufacturer.

3.05 PROTECTION

A. Protect finished athletic flooring from construction traffic to ensure that it is without damage upon Date of Substantial Completion.

END OF SECTION

SECTION 09 6616
PRECAST CEMENT TERRAZZO TREADS AND LANDINGS

PART 1 - GENERAL

1.01 SECTION INCLUDES

A. Precast Terrazzo Treads and Landings

B. Setting material, grouts, sealants and caulks

C. Installation of precast terrazzo stairs, base, sills, etc.

1.02 RELATED SECTIONS

A. Section 05 5100: Installation of steel stairs to receive precast terrazzo .

1.03 REFERENCES

A. American Society for Testing and Materials (ASTM)

B. ASTM C-150

C. ASTM C-33

D. ASTM C-140

E. ASTM C-293

F. ASTM C-1028

G. National Terrazzo and Mosaic Association Inc. (NTMA)

H. Federal Register Part III 28 CFR Part 36

1.04 SUBMITTALS

A. Submit in accordance with provisions of Section 00 1300.

B. Shop Drawings
   1. Submit shop drawings of all precast terrazzo items showing detailed sections and profile for all precast items. Details shall show all reinforcing and special hardware for fastening.

C. Samples:
   1. Submit samples, 6" x 6" size, for all colors.

D. Submit two copies of NTMA maintenance literature.

1.05 PERFORMANCE REQUIREMENTS:

A. Compressive Strength 4000 p.s.i.

B. Flexural Strength 600 p.s.i.

C. Certification: Suppliers shall furnish certification attesting that materials meet specification requirements.

1.06 QUALITY ASSURANCE

A. NTMA Standards: Comply with specified provisions and recommendations of the National Terrazzo & Mosaic Association, Inc. (NTMA).

B. Manufacturer's Instructions: In addition to specified requirements, comply with precast terrazzo manufacturer's instructions and recommendations for substrate preparation, materials storage, mixing and application, finishing and curing.

C. Qualifications: Precast Terrazzo Manufacturer and Trade Contractor must have a minimum of 5 years of successful experience on projects of similar magnitude and complexity to that indicated project.

1.07 DELIVERY, STORAGE AND HANDLING

A. Packaging and Shipping: Precast terrazzo to be palletized and shrink wrapped, delivered in original unopened packaging.

B. Storage and Protection: Precast terrazzo to be stored indoors, sheltered from moisture in original packaging. Protect from damage by other trades.

1.08 WARRANTY

A. Manufacturer/Installer shall warrant installed system for a period of 1 year from date of substantial completion against failure of workmanship and materials.

PART 2 - PRODUCTS

2.01 MANUFACTURERS

A. Basis of Design:
   1. Wausau Tile, Inc.

B. Substitutions will be considered under the provisions of Section 00 1600.
   1. Other manufacturer's shall comply with minimum levels of material specifications and detailing indicated on the drawings of specified herein.

2.02 MATERIALS

A. Portland Cement: ASTM C-150 Specifications for Portland Cement.

B. Aggregates: All aggregates to meet ASTM C-33 specifications, cleaned and properly graded to size. Aggregate shall be blended to meet individual project requirements.

C. Marble chips, size to conform with NTMA gradation standards.

D. Coloring; Pigments used shall be inorganic, resistant to alkalinity and used per manufacturer's recommendations.

E. Reinforcement and Hardware:
   1. To conform with NTMA and Manufacturer's design.
   2. Reinforce precast with deformed rods or wire mesh or both as recommended by precast terrazzo manufacturer.

F. Abrasive Inserts: Shall consist of silica sand and black epoxy, three lines.

G. Caulks & Sealants:
   1. Urethane or Polyurethane Sealant
   2. Color to be selected by Architect from manufacturers standard colors.

H. Cleaner: Liquid neutral chemical cleaner, with pH factor between 7 and 8, of formulation recommended by sealer manufacture for type of precast terrazzo used and complying with NTMA requirements.

I. Sealer: Colorless, slip and stain-resistant penetrating sealer with pH factor between 7 and 8, that does not affect color or physical properties of precast terrazzo surface. Flash point (ASTM D56): 80 degrees F, Minimum.

2.03 MANUFACTURED UNITS

A. Sizing Tolerances:
   1. All units to conform to shop drawings with a 1/16" tolerance in dimension.

B. Precast Surfaces and Edges:
   1. All exposed edges to be ground and polished with a minimum of 1/16" bevel.

C. All finished surfaces to be ground and polished, free of holes and to have overall uniformity in matrix and aggregate.

D. All precast terrazzo finished surfaces to be sealed with a sealer approved by manufacturer.

PART 3 - EXECUTION

3.01 INSPECTION

A. Examine areas to receive precast terrazzo for the following:
   1. Defects in existing work.
   2. Deviations beyond allowable tolerances for the substrate.
   3. Start work only when all defects have been corrected by others.

3.02 INSTALLATION

A. Setting:
   1. Set accurately as shown on approved shop drawings. Setting methods are:
      a. Thin Set
      b. Weld
      c. Bolt
   2. Alignment of precast should be straight and true to all dimensions and may not vary more than 1/8" in length, height or width.
   3. Install anchors as shown on details.
   4. Fill joints between with manufacturer -approved caulk or as specified.

3.03 PROTECTION

A. Protect the finished terrazo work from damage by other trades.

B. Seal terrazzo finished surfaces with a sealer approved by manufacturer.

END OF SECTION

SECTION 09 6633
CEMENT TERRAZZO TILES

PART 1 - GENERAL

1.01 SUMMARY

A. Types of terrazzo tile work included:
   1. Terrazzo tile floor and wall tile.

B. Polishing and finishing maintenance materials

1.02 RELATED REQUIREMENTS

A. Section 03 3000 - Cast-In-Place Concrete: Substrate.

B. Section 09 3000 - Tiling: Setting materials.

C. Section 09 6616 - Precast terrazzo stair and base.

1.03 REFERENCES

A. American Society for Testing and Materials (ASTM)
   1. ASTM C-33
   2. ASTM C-140
   3. ASTM C-150
   4. ASTM C-293
   5. ASTM C-373
   6. ASTM C-482
   7. ASTM C-485
   8. ASTM C-499
   9. ASTM C-502
   10. ASTM C-609
   11. ASTM C-648
   12. ASTM C-650
   13. ASTM C-674
   14. ASTM C-1243
   15. ASTM C-1378

B. American National Standards Institute (ANSI)
   1. ANSI A108.1 thru A108.17
   2. ANSI A118.1 thru A118.15
   3. ANSI A137.1 section 9.6

C. National Terrazzo and Mosaic Association (NTMA)

D. Tile Council of North America (TCNA) Handbook - latest edition

1.04 QUALITY ASSURANCE

A. Setting and Grouting Materials: Provide materials obtained from one source for each type and color of grout and setting materials.

B. NTMA Standards: Comply with specified provisions and recommendations of NTMA.

C. TCNA Standards: Comply with specifications under the current Handbook for Tile Installation.

D. Manufacturer to supply written Terrazzo Tile Protocol, upon request.

1.05 DELIVERY, STORAGE, AND HANDLING

A. Packaging and Shipping: Terrazzo tile to be delivered in original unopened packaging with legible manufacturer identification including size, color, manufacture date and job number.

B. Storage and Protection: Terrazzo tile is to be stored indoors in a climate controlled environment, sheltered from moisture and in the original packaging. Tile must be protected from damage by other trades.

1.06 WARRANTY

A. Terrazzo tile flooring and accessories are warranted against product defects for one year from date of delivery.

PART 2 - PRODUCTS

2.01 MANUFACTURER

A. Basis of Design: Wausau Tile, Inc., as distributed by:
Wausau Tile, Inc.
9001 Business Hwy 51
Rothschild, WI. 54474
www.wausautile.com

B. Substitutions: See Section 01 6000 - Product Requirements.

2.02 MATERIALS

A. Portland Cement: ASTM C-150 specifications for Portland Cement

B. Aggregates: ASTM C-33
1. The aggregates used have a class/shade range as per ASTM test C609 from V1 rating to V2 rating.

C. Coloring: Pigments used shall be inorganic, resistant to alkalinity, and used per manufacturer's recommendations.

D. Color Blending: The aggregates used have a natural color range. This can cause slight variances in overall color. Tiles should be blended at the job site from several cartons/pallets during installation.

E. Applied Initial Protectant:
1. Apply Scotchgard™ Stone Floor Protector to the terrazzo tile prior to packaging.

2.03 MANUFACTURED UNITS

A. Pressed Cement Terrazzo Tiles
1. Size:11-13/16" x 11-13/16” x 1/2”, 7.0 lbs. (approx.)
15-13/16” x 15-13/16” x 5/8”, 14.0 lbs (approx.)
17-13/16” x 17-13/16” x 5/8”, 18.0 lbs (approx.)
11-13/16” x 23-13/16” x 5/8”, 16.0 lbs (approx.)
23-13/16” x 23-13/16” x 5/8”, 30.0 lbs (approx.)

B. Chamfered face edges

C. Surfaces to be uniform in appearance and free of blemishes.

D. Color:
1. Custom Colors and Blends
a. Provide Custom Colors .

E. Finish/Texture:

1. Factory Polish or Honed.
2. Back of tile: Ground flat and free from protrusions.

2.04 FABRICATION

A. Mechanically vibrated in molds.

B. Hydraulically pressed by 900-ton/3250 psi press.

C. Steam-cured with 100 percent humidity for 18 hours at 140 degrees F.

D. Factory finish: In-line back and face grinding.

E. Factory applied initial protectant.

F. Packaged and palletized.

2.05 SOURCE QUALITY CONTROL

A. Inspections at manufacturer:
1. Documented inspection of terrazzo tile quality control tests.
2. Testing is performed on the 7th day and the 28th day after the tile has been pressed.
a. Compression - ASTM C140 > 8,000 psi
b. Absorption - ASTM C 140 < 5%
c. Flexural - ASTM C 293 > 1000 psi
d. Specular Gloss Testing at 60 degrees - ASTM D523
e. Stain testing / initial protection testing

B. Test Results
1. Independent Test Lab completed and verified the following data:
a. ASTM C373 Water Absorption - Passes (Semi-Vitreous)
b. ASTM C482 Bond Strength - > 300 psi.
c. ASTM C485 Warpage Edge +/- .001% or .002 in.
d. ASTM C485 Warpage Diagonal +/- .003% or .010 in.
e. ASTM C499 Nominal Size - range of .029 in.
f. ASTM C499 Thickness - range of .029 in.
g. ASTM C502 Wedging +/- .023% or .028 in.
h. ASTM C609 Color Uniformity - V1 - V2
i. ASTM C648 Breaking Strength - > 500 lbf.
j. ASTM C650 Resistance to Chemical Substance- not affected
k. ASTM C674 Flexural properties - > 1000 psi.
l. ASTM C1243 Deep Abrasion Wear - passes (meets p3 standards)
m. ASTM C1378 Resistance to staining - not affected
n. ANSI A137.1 Section 9.6.1 “Wet Dynamic Coefficient of Friction (DCOF)”
1) Average Polished Finish = .46
2) Average Honed Finish = .54

2.06 SETTING MATERIALS

A. Refer to Sectio 09 3000 - Tiling for setting materials.

PART 3 - EXECUTION

3.01 INSTALLATION

A. Refer to Section 09 3000 - Tiling for tile installation.

B. All installations of terrazzo tile shall comply with the appropriate Installation Method as depicted in the current edition of the Tile Council of North America Handbook for Ceramic, Glass, and Stone Tile Installation.

C. All materials used for installation of terrazzo tile must comply with the appropriate ANSI 118 and ISO 13007 standards and specifications.
   1. Setting materials manufacturer's printed installation instructions are to be followed in every instance.
   2. ANSI A-118.4 and ISO C2S1 mortars or better are recommended.

D. A minimum of 95 percent thin-set coverage is recommended on the back of the terrazzo tile. The corners of the tile must have good mortar support to prevent cracking. Back buttering is recommended to reach these requirements.

E. Appropriate ANSI A-108 installation specifications that correspond with the selected TCNA Installation Method are to be followed. This includes Substrate and Surfaces inspections, Location and Frequency of EJ171 Movement Joint Guidelines, Placement Techniques, and Grouting Procedures.

F. Color Blending: Blend tiles at the job site from several cartons/pallets during installation.

G. Minimum grout joint width: 1/8 inch.

H. When using a heavy pigmented grout, use a grout release be applied prior to grouting. Test area to ensure the grout release was adequately applied.

I. If a slight grout haze occurs, remove using 3M™ Eraser Pad 3600 Pink pad with water and 3M™ Neutral Cleaner.

J. If a more difficult stain occurs, use a Scotch-Brite™ Doodlebug™ Easy Erasing Pad 4610 with water and 3M™ Neutral Cleaner.

3.02 CLEANING

A. Dust mop or vacuum to remove sand, dust and other contaminants off the surface

B. Damp mop lightly soiled floors with a Neutral Cleaner per the manufacture's recommendations.

C. For more aggressive cleaning use a mechanical buffer or auto scrubber along with a 3M™ Red Buffer Pad 5100 and Neutral Cleaner per the manufacturer's recommendations.
   1. For cleaning combined with light polishing, the Scotch-Brite™ Purple Diamond Pad Plus may be used on an auto scrubber.

D. Clean up all spills immediately.
   1. If a stain occurs, see manufacturer's technical bulletin titled Repair of Etch or Stained Terrazzo Tiles to assist with the repair.
   2. DO NOT use acidic cleaners, cleaners that contain citrus (d-limonene), 2-butoxyethanol (butyl cellusolve), amine based cleaners, isopropyl alcohol, solvent based cleaners, degreasers, or non-neutral cleaners
   3. DO NOT use spray buff products or chemical dust mop treatments.

3.03 EXTENDED CARE AND MAINTENANCE

A. Terrazzo Tile may be periodically burnished using Scotch-Brite™ Purple Diamond Pad Plus to maintain gloss.

B. When the terrazzo tile no longer returns to gloss by burnishing, an additional application of Scotchgard™ Stone Floor Protector should be applied.

C. Scotchgard™ Stone Floor Protector will wear down over time due to floor traffic.
   1. High traffic areas should be recoated at least once every 6 months.
   2. Light to moderate traffic areas should be recoated at least once a year.
   3. Acceptable Alternate:

a. Aqua Mix Sealers Choice Gold made by Custom Building Products.
   1) Apply product per manufactures published instructions.

END OF SECTION

SECTION 09 6700
TROWELED SEAMLESS FLOORING

PART 1 GENERAL

1.01 SECTION INCLUDES

A. Troweled seamless flooring and base.

1.02 REFERENCE STANDARDS

A. ASTM D570 - Standard Test Method for Water Absorption of Plastics; 1998 (Reapproved 2010).

B. ASTM D638 - Standard Test Method for Tensile Properties of Plastics; 2014.

C. ASTM D 695 - Standard Test Method for Compressive Properties of Rigid Plastics; 2008.

D. ASTM D905 - Standard Test Method for Strength Properties of Adhesive Bonds in Shear by Compression Loading; 2008 (Reapproved 2013).

E. ASTM D4060 - Standard Test Method for Abrasion Resistance of Organic Coatings by the Taber Abraser; 2014.

F. ASTM E96/E96M - Standard Test Methods for Water Vapor Transmission of Materials; 2014.

G. ASTM E648 - Standard Test Method for Critical Radiant Flux of Floor-Covering Systems Using a Radiant Heat Energy Source; 2014c.

1.03 SUBMITTALS

A. Product Data: Provide data on specified products, describing physical and performance characteristics; sizes, patterns and colors available.

B. Samples for verification: Submit two samples, 4 x 4 inch in size illustrating color and pattern for each floor material for each color specified.

C. Manufacturer's Installation Instructions: Indicate special procedures.

D. Maintenance Data: Include maintenance procedures, recommended maintenance materials, procedures for stain removal, repairing surface, and suggested schedule for cleaning.

1.04 QUALITY ASSURANCE

A. Manufacturer Qualifications: Company specializing in manufacturing products specified in this section with minimum three years documented experience.

B. Supervisor Qualifications: Trained by product manufacturer, under direct full time supervision of manufacturer's own foreman.

1.05 DELIVERY, STORAGE, AND HANDLING

A. Store resin materials in a dry, secure area.

B. Store materials for three days prior to installation in area of installation to achieve temperature stability.

1.06 FIELD CONDITIONS

A. Maintain minimum temperature in storage area of 55 degrees F.

B. Store materials in area of installation for minimum period of 24 hours prior to installation.

C. Maintain ambient temperature required by manufacturer 72 hours prior to, during, and 24 hours after installation of materials.

PART 2 PRODUCTS

2.01 MATERIALS

A. Troweled Seamless Flooring and Base, 3/16" nominal thickness:
   1. Physical Characteristics:Critical Radiant Flux: Minimum of 0.22 watts/sq cm, when tested in accordance with ASTM E 648.
      a. Tensile Strength: 1,000 psi, when tested in accordance with ASTM D 638.
      b. Compressive Strength: 5,000 psi (34.45 MPa) , when tested in accordance with ASTM C 579.
      c. Abrasion Resistance: Maximum weight loss of.03 g/1000 cycles, when tested in accordance with ASTM D 4060.
      d. Impact Resistance: >160 in/lb; no cracking, chipping or delamination, when tested with Gardner Impact Tester.
   2. Manufacturers and products Type RF-1:
      a. Stonhard; Product: Stontec TRF: www.stonhard.com
         1) Primer: Urethane.
         2) Base Coat: 1/8 inch thick four-component, troweled 100 percent solids urethane mortar system.
         3) Undercoat: A two-component, 100 percent solids epoxy bonding coat.
         4) Color Flake Broadcast Layer: Brightly colored vinyl flakes.
         5) Sealer: A two-component, UV resistant, aliphatic polyaspartic urethane sealer.
      b. Dex-O-Tex: Product: Decor-Flor Troweled Epoxy Floor
         1) Bondcoat Primer, squeege, roler or brush applied.
         2) Decor-Flor II trowel applied with colored quartz aggregate, 3/16 inch thick.
         3) Groutcoat with Decor-Flor II
         4) Dex-O-Tex Aero_Flor 100 finish coat, an aliphatic polyester urethane sealer.
   3. Manufacturers and products Type RF-2:
      a. Stonhard; Product: Stonshield UTS: www.stonhard.com and broadcast system consisting of a urethane-urea binder, pigments, powders and quartz aggregates.
      b. Thickness: nominal 1/4 in./6 mm

2.02 ACCESSORIES

A. Divider Strips: Zinc, 1/8 inch thick, height to match flooring thickness, with anchoring features; color as selected.

B. Control Joint Strips: Match divider strips; 1/8 inch nominal width, 1/8 inch wide neoprene filler strip between side strips, with anchoring features, strip height to suit flooring thickness.

C. Base Caps, and Separator Strips: Match divider strips, with projecting base of 1/8 inch.

D. Subfloor Filler: type recommended by flooring material manufacturer.

E. Primers and Adhesives: Waterproof; types recommended by flooring manufacturer.

PART 3 EXECUTION

3.01 EXAMINATION

A. Verify that sub-floor surfaces are smooth and flat within the tolerances specified for that type of work and are ready to receive flooring.

B. Verify that wall surfaces are smooth and flat within the tolerances specified for that type of work, are dust-free, and are ready to receive flooring.

C. Verify that sub-floor surfaces are dust-free and free of substances that could impair bonding of materials to sub-floor surfaces.

D. Verify that concrete sub-floor surfaces are ready for flooring installation by testing for moisture emission rate and alkalinity; obtain instructions if test results are not within limits recommended by flooring materials manufacturer.

E. Verify that required floor-mounted utilities are in correct location.

3.02 PREPARATION

A. Remove sub-floor ridges and bumps. Fill low spots, cracks, joints, holes, and other defects with sub-floor filler.

B. Apply, trowel, and float filler to achieve smooth, flat, hard surface. Grind irregularities above the surface level. Prohibit traffic until filler is cured.

C. Vacuum clean substrate.

D. Apply primer to surfaces required by flooring manufacturer.

3.03 INSTALLATION - STRIPS

A. Accurately saw cut substrate to install divider strips.

B. Install strips straight and level to locations indicated.

3.04 INSTALLATION - FLOORING

A. Apply in accordance with manufacturer's instructions.

B. Apply each coat to minimum thickness required by manufacturer.

C. Finish to smooth level surface.

D. Cove at vertical surfaces. Base height: 6" unless otherwise indicated.

3.05 PROTECTION

A. Prohibit traffic on floor finish for 48 hours after installation.

B. Barricade area to protect flooring until fully cured.

END OF SECTION

SECTION 09 6813
TILE CARPETING

PART 1 GENERAL

1.01 SECTION INCLUDES

A. Carpet tile, fully adhered.

1.02 RELATED REQUIREMENTS

A. Section 03 3000 - Cast-in-Place Concrete: Restrictions on curing compounds for concrete slabs and floors.

B. Section 09 0561 - Common Work Results for Flooring Preparation: Independent agency testing of concrete slabs, removal of existing floor coverings, cleaning, and preparation.

1.03 REFERENCE STANDARDS

A. ASTM D2859 - Standard Test Method for Ignition Characteristics of Finished Textile Floor Covering Materials; 2006 (Reapproved 2011).

B. ASTM E648 - Standard Test Method for Critical Radiant Flux of Floor-Covering Systems Using a Radiant Heat Energy Source; 2014c.

C. CRI (GLP) - Green Label Plus Testing Program - Certified Products; www.carpet-rug.org; current edition.

D. NFPA 253 - Standard Method of Test for Critical Radiant Flux of Floor Covering Systems Using a Radiant Heat Energy Source; 2015.

1.04 SUBMITTALS

A. Product Data: Provide data on specified products, describing physical and performance characteristics; sizes, patterns, colors available, and method of installation.

B. Samples: Submit two carpet tiles illustrating color and pattern design for each carpet color selected.

C. Manufacturer's Installation Instructions: Indicate special procedures.

D. Maintenance Data: Include maintenance procedures, recommended maintenance materials, and suggested schedule for cleaning.

E. Maintenance Materials: Furnish the following for Owner's use in maintenance of project.
   1. See Section 01 6000 - Product Requirements, for additional provisions.
   2. Extra Carpet Tiles: Quantity equal to 5 percent of total installed of each color and pattern installed.

1.05 QUALITY ASSURANCE

A. Manufacturer Qualifications: Company specializing in manufacturing specified carpet tile with minimum three years documented experience.

B. Installer Qualifications: Company specializing in installing carpet tile with minimum three years documented experience and approved by carpet tile manufacturer.

1.06 FIELD CONDITIONS

A. Store materials in area of installation for minimum period of 24 hours prior to installation.

PART 2 PRODUCTS

2.01 MATERIALS

A. Carpet Tile Type CT-1, CT-2: Tufted, manufactured in one color dye lot.

1. Product: Retro Rogue Ready Confetti Tile manufactured by Mohawk.
2. Tile Size: 24 x 24 inch, nominal.
3. Dye method: 100% solution dyed.
4. Color: as indicated.
5. Critical Radiant Flux: Minimum of 0.22 watts/sq cm, when tested in accordance with ASTM E648 or NFPA 253.
6. Surface Flammability Ignition: Pass ASTM D2859 (the "pill test").

B. Carpet Tile Type CT-3, CT-4: Tufted, manufactured in one color dye lot.
1. Product: Retro Rogue Mix and Match Tile 12BY36 manufactured by Mohawk.
2. Tile Size: 12 x 36 inch, nominal.
3. Dye method: 100% solution dyed.
4. Color: as indicated.
5. Critical Radiant Flux: Minimum of 0.45 watts/sq cm, when tested in accordance with ASTM E 648 or NFPA 253.
6. Surface Flammability Ignition: Pass ASTM D 2859 (the "pill test").
7. VOC Content: Provide CRI Green Label Plus certified product.

C. Walk-off Carpet Tile, Type WCT -1: Tufted, manufactured in one dye lot.
1. Product: Tuff Stuff II Collection manufactured by Mohawk.
2. Tile Size: 24 by 24 inch, nominal.
3. Color: To be selected.
4. Pattern: Step In Style II Tile, QL 312

2.02 ACCESSORIES

A. Sub-Floor Filler: White premix latex; type recommended by flooring material manufacturer.

B. Edge Strips: Rubber, color as selected.

C. Stair Nosing: Rubber type, square nose, ribbed top surface, one piece per stair tread width , color as selected.

PART 3 EXECUTION

3.01 EXAMINATION

A. Verify that sub-floor surfaces are smooth and flat within tolerances specified for that type of work and are ready to receive carpet tile.

B. Verify that sub-floor surfaces are dust-free and free of substances that could impair bonding of adhesive materials to sub-floor surfaces.

C. Verify that concrete sub-floor surfaces are dry enough and ready for flooring installation by testing for moisture emission rate and alkalinity in accordance with ASTM F710; obtain instructions if test results are not within limits recommended by carpet tile manufacturer and adhesive materials manufacturer.

D. Verify that required floor-mounted utilities are in correct location.

3.02 PREPARATION

A. Remove sub-floor ridges and bumps. Fill minor or local low spots, cracks, joints, holes, and other defects with sub-floor filler.

B. Apply, trowel, and float filler to achieve smooth, flat, hard surface. Prohibit traffic until filler is cured.

C. Vacuum clean substrate.

3.03 INSTALLATION

A. Starting installation constitutes acceptance of sub-floor conditions.

B. Install carpet tile in accordance with manufacturer's instructions.

C. Blend carpet from different cartons to ensure minimal variation in color match.

D. Cut carpet tile clean. Fit carpet tight to intersection with vertical surfaces without gaps.

E. Lay carpet tile in square pattern, with pile direction alternating to next unit, set parallel to building lines, unless otherwise indicated.

F. Locate change of color or pattern between rooms under door centerline.

G. Fully adhere carpet tile to substrate.

H. Trim carpet tile neatly at walls and around interruptions.

I. Complete installation of edge strips, concealing exposed edges.

3.04 CLEANING

A. Remove excess adhesive without damage, from floor, base, and wall surfaces.

B. Clean and vacuum carpet surfaces.

END OF SECTION

SECTION 09 8100
ACOUSTICAL INSULATION

PART 1 GENERAL

1.01 SUMMARY

A. Section Includes: Acoustic insulation used alone or in conjunction with other materials to provide acoustical isolation.

B. Related Sections:
1. Section 072100 - Thermal Insulation
2. Section 092116 - Gypsum Board: Acoustical batt insulation in cavity walls.
3. Section 098400 - Acoustic Room Components

1.02 SUBMITTALS

A. Product Data: Submit product data for insulation types.

B. Shop Drawings: Submit shop drawings of insulation used in assemblies, indicating thickness, attachment, and finish material.

C. Samples:
1. Submit 12 by 12 inch samples of each color specified for Architect's verification.

D. Submit following Informational Submittals:
1. Test Reports:
   a. Submit independent laboratory sound transmission test report on letterhead of testing laboratory.
   b. Submit certified test reports on composite fabric and backing flame spread and smoke contribution.
2. Certifications specified in Quality Assurance article.
3. Qualification Data: Manufacturer's qualification data.
4. Manufacturer's instructions.
5. Manufacturer's field reports.

E. Closeout Submittals:
1. Maintenance data.

1.03 QUALITY ASSURANCE:

A. Manufacturer's Qualifications: Regularly engaged in manufacture of acoustical insulation for commercial use on 10 projects of similar nature in past 3 years.

B. Regulatory Requirements: Ensure components and completed installation comply with fire resistive standards of applicable local, state, and federal codes, laws and ordinances. Flame spread index shall not exceed 25, and smoke density shall not exceed 50 when tested in accordance with ASTM E84 in manner representative of actual installation.

C. Certifications: Certify compliance with specified NRC ratings.

1.04 FIELD SAMPLES

A. Sample Installation:
1. Install 2 full size panels in area designated by Architect.
2. Show edge treatment, applied mesh, and hanging techniques.

1.05 DELIVERY, STORAGE, AND HANDLING

A. Immediately inspect material upon arrival at site for defects and damage.

B. Safeguard against disfiguration, contamination, and damage by physical abuse or abuse from other harmful materials.

C. Store materials in clean, dry area, and protect from construction traffic.

PART 2 - PRODUCTS

2.01 ACOUSTICAL INSULATION TYPES

A. Acoustical Insulation - Cavity Insulation for Sound Rated Partitions. Refer to Section 092900 Gypsum Board.

B. Acoustical Insulation - Black Faced Fiberglass Board
   1. Fiberglass board for walls and ceilings shall be 2-inch or 4-inch thick, as called out in the drawings or specifications. It shall be installed on the undersides of the roof deck as shown on the drawings.
   2. Fiberglass board shall be fiberglass insulation with a black mat surface acrylic coating without manufacturer's markings. This coating shall be damage resistant, not tearing or abrading easily. Fiberglass board shall be 3 lb/ft3 minimum density meeting the requirements of NFPA 90-A. Fiberglass board and adhesives shall comply with ASTM E-84 and shall have a maximum flame spread rating of 25 and smoke rating of 50.
   3. Fiberglass board shall conform to ASTM C 423 standard "Sound Absorption" and have the following minimum sound absorption coefficients when tested in accordance with ASTM C423 and E795 procedures mounting type "A":
      a. NRC 0.80 at 2-inches thick; NRC 1.00 at 4-inches thick.
   4. The following are acceptable, subject to the above:
      a. Select Sound Black Acoustic Board from Owens Corning Fiberglas Corporation, Toledo, OH.
      b. AcoustaBoard Black or CertaPro AcoustaBoard Black from CertainTeed, Valley Forge, PA.
      c. INC C-700 from Industrial Noise Control, North Aurora, IL.

C. Acoustical Insulation - Fabric Wrapped Acoustical Panels for walls and ceilings. Refer to Section 098400 Acoustic Room Components.

D. Acoustical Insulation - Perimeter Isolation Board at Floating Wood Floor System.

E. Acoustical Insulation - Safing Insulation.
   1. Safing insulation should be 4-5 lb/ft3 density unfaced semi-rigid fiberglass or mineral wool material. Thickness as called out on the drawings or as required to fully pack voids. Safing insulation should be dimensionally stable and should not slump within cavity. Safing insulation should be inorganic, rot, mildew and vermin proof and should not corrode steel, copper and aluminum. Flame spread and smoke developed index not to exceed 25 and 50 respectively per ASTM E-84.
   2. The following are acceptable, subject to the above:
      a. Safing Insulation or Mineral Wool from Owens Corning Fiberglas Corporation, Toledo, OH. (800) 438-7465
      b. Pyro Fiber Safing from Johns Manville Mechanical Insulation Division, Denver, CO. (800) 654-3103

F. Acoustical Insulation - Sound Absorptive Material for Acoustical Ceilings, Floating Floors and Penetrations.
   1. Sound absorptive material for above acoustical ceilings, under floating floors and for around penetrations in walls and floor/ceiling assemblies shall be fiberglass or mineral fiber with a density of 1-1/2 lb/ft3. Thickness shall be as called out on the drawings. It

shall be unfaced and supplied in semi-rigid board form. Flame spread and smoke developed index not to exceed 25, per ASTM E-84. Material shall be non-combustible per ASTM E136. Where large penetrations occur in fire-rated constructions, the use of semi-rigid fire-rated mineral wool safing may be required.

2. Material to be laid directly on upper side of sound control ceiling, or between vibration isolation supports in floating floor constructions. For use in sealing penetrations of acoustically-rated partitions, pack material completely in space between penetrating object and partition, leaving no voids or spaces.
3. The following are acceptable, subject to the above:
   a. Industrial Insulation Type 701 unfaced, from Owens Corning Fiberglas Corporation, Toledo, OH. (800) 438-7465
   b. Insul-Shield 150 from Johns Manville, Denver, CO. (800) 654-3103
   c. Insulation Board from Knauf Fiber Glass GmbH, Shelbyville, IN. (317) 398-4434

2.02 ACCESSORIES

A. Insulation Impaling Fasteners:
   1. Impaling pins consisting of metal spindle with perforated base plate for adhesive application.
   2. Spun aluminum friction fit retainer caps.
   3. Select length to suit insulation thickness so insulation is depressed same thickness for visual uniformity.
   4. Adhesive: As recommended by impaling pin manufacturer for project substrates and insulation thickness.
   5. Retainer Caps:
      a. RC 10 washers and “Dome Cap Washer” matching Architect’s sample by AGM (Western Welding Systems; 1.800.287.9873).
      b. Dome Cap, Gemco.
      c. Paint caps and washers flat black unless otherwise indicated.

PART 3 - EXECUTION

3.01 EXAMINATION

A. Verify existing conditions before starting work.

3.02 INSTALLATION

A. Install acoustical insulation plumb, level, in proper alignment.

B. Anchor components securely in place after proper alignment.

C. Scribe insulation to fit adjacent work.

D. Butt joints tightly.

E. Apply accessories and concealed fastenings as recommended by manufacturer.

F. Impaling Pins at Exposed Insulation:
   1. Adhere impaling pins to clean, dry sound substrates with recommended adhesive.
   2. Locate impaling pins in pattern indicated on Drawings. Provide symmetrical layout on visually acceptable grid.
   3. Layout insulation so joints align in both directions; provide insulation panels of same size and symmetrically located within wall or ceiling area.
   4. Supplement ceiling impaling pins with spray adhesive to hold horizontally mounted insulation.
   5. Cut insulation panels with sharp knife to achieve clean-cut edges.

6. Do not use small pieces of insulation where single piece will fit.
7. Impale insulation panels onto spindle with edges tightly butted.
8. Install retainer caps over spindle without over-compressing insulation.
9. Touch-up painted caps with paint to match insulation; flat black or white.

G. Remove and replace panels which have been damaged and are unacceptable to Architect.

3.03 ADJUSTING

A. Adjust installed panels to ensure ends and edges of adjacent panels are flush and in alignment with each other, unless otherwise indicated.

3.04 CLEANING

A. Clean finished surfaces and accessories in accordance with manufacturer's directions.

B. Cover or otherwise protect installed work to prevent soiling.

C. Clean and repair surfaces soiled or otherwise damaged in connection with work of this Section. Pay cost of replacing finishes or materials that cannot be satisfactorily cleaned or which have been damaged by improper cleaning materials and techniques.

END OF SECTION

SECTION 09 8400
ACOUSTIC ROOM COMPONENTS

PART 1 GENERAL

1.01 SECTION INCLUDES

A. Fabric-covered fiberglass core panels and mounting accessories.

B. Barrel Shaped Ceiling Diffusers.

C. Cementitious Wood Fiber Acoustical Wall Units

D. Plastic laminate veneer acoustical panels.

E. Corrugated acoustical metal wall panels.

1.02 RELATED REQUIREMENTS

A. Section 06 1000 - Rough Carpentry

B. Section 06 2000 - Finish Carpentry

C. Section 09 5100 - Acoustical Ceilings

D. Section 09 9000 - Paints and Coatings

1.03 SUBMITTALS

A. Product Data: Manufacturer's printed data sheets for products specified.

1. Provide manufacturer's product specifications and installation instructions for acoustical panels and attachment system. Include manufacturer's recommendations for cleaning the fabric on all the acoustical panels, including precautions against materials and methods that may be detrimental to finishes and acoustical performance.

B. Shop Drawings: Fabrication and installation details, panel layout, and fabric orientation. Shop drawings shall indicate at large scale, all locations of acoustical panels. Submit profiles, sizes and reinforcing and anchorage devices, for securing to adjacent materials.

C. Submit certificate of compliance to specified acoustical and fire performance criteria, signed by an officer of the panel manufacturer and attach independent laboratory test results for each product used, showing that the products supplied as components and complete assemblies, meet or exceed the specified requirements.

D. Selection Samples: Manufacturer's color charts for fabric covering, indicating full range of fabrics, colors, and patterns available.

E. Verification Samples: Fabricated samples of each type of panel specified; 24 by 24 inch, showing construction, edge details, and fabric covering, with exposed color and texture and mounting clip and trim to be expected in completed work.

F. Submit samples of all different types of mounting devices, extrusions, etc. for use in this project.

G. Test Reports: Certified test data from an independent test agency verifying that panels meet specified requirements for acoustical and fire performance.

1.04 QUALITY ASSURANCE

A. Manufacturer Qualifications: Company with not less than 5 years of experience in manufacturing acoustical products similar to those specified.

B. Installation by firm with not less than three years of successful experience in installation of acoustical panels similar to requirements for this project. The installing contractor shall shall have a written document signed by the manufacturer verifying manufacturer's approval of the

referenced contractor to install the acoustical products that are the responsibilty of that contractor.

C. Provide acoustical panels which have been tested, rated and labeled by U.L. for indicated ratings as listed in "Classification Building Materials Index" by U.L.
   1. Fire Performance Characteristics: Provide acoustic wall panels with surface-burning characteristics as determined by testing panel components in accordance with ASTM E84 test procedures
      a. ASTM E-84 Classification Class "A" or "1"
      b. Flame Spread: 25 or less
      c. Smoke Developed: 450 or less

D. Acoustical Performance Characteristics: Provide acoustic wall panels with acoustical absorption characteristics as indicated in Part 2, which have been determined by testing fully assembled production material in accordance with ASTM C 423 (Type "A" mounting as defined by ASTM E-795) by a testing organization acceptable to authorities having jurisdiction.

E. All fabric finishes specified for acoustic panels shall be tested in accordance with ASTM D6207 - Standard Test Method for Dimensional Stability of Fabrics to Changes in Humidity and Temperature

F. All acoustical wall and ceiling panels of the same type shall be purchased from a single supplier.

1.05 WARRANTY

A. Written guarantee that panels are constructed in accordance with the acoustical laboratory tested product and will be free of defects in material and workmanship for a period of one year after installation.

B. Provide warranty above for a period of five years for acoustic room components.

1.06 DELIVERY, STORAGE, AND HANDLING

A. Protect acoustical panels from moisture during shipment, storage, and handling. Deliver in factory-wrapped bundles; do not open bundles until panels are needed for installation, cartoned or crated to provide protection during transit and job storage, properly tagged and identified.

B. Inspect acoustical panels upon delivery for damage. Minor damages may be repaired provided refurbished items are equal in all respects to new work and acceptable to Architect; otherwise, remove and replace damaged items as directed.

C. Store panels flat, in dry, well-ventilated space; do not stand panels on end. Protect products from damage that may be caused by exposure to water, moisture, chemicals, direct sunlight, or infestation.

D. Protect panel edges from damage. On site storage shall be such as to assure that all panels and associated materials are protected from damage, and storage area is climatically controlled to normal operational levels.

E. Comply with manufacturer’s recommendations.

1.07 PROJECT CONDITIONS

A. Project Environmental Requirements: Prior to unpacking or installing, ensure that the installation area is fully enclosed and protected from moisture and direct sunlight. Ensure that the building’s mechanical systems are fully operational and will not be turned off again even for testing and balancing of the mechanical systems. Coordinate with other trades to ensure

that all work above or behind surfaces is complete and that all wet and dusty trades have completed work.

B. Product Acclimatization: If recommended by manufacturer, allow both the installation area and the components to stabilize in temperature and humidity levels that are representative of the final temperature and humidity levels expected after building completion and occupation following manufacturer's instructions. Do not install products if the humidity exceeds 65%.

PART 2 PRODUCTS

2.01 MANUFACTURERS

A. Fabric-Covered Acoustical Panels:
   1. Basis of Design: Acoustical Absorptive AP Panel by Decoustics Limited, www.decoustics.com, P.O. Box 615, Getzville, NY,14068-0615 (800)387-3809.
   2. Golterman & Sabo, ATF Acousti-Tack Fiberglass. www.gsacoustics.com
   3. Armstrong World Industries, Inc., Lancaster, PA 717-397-0611 www.armstrong.com
   4. Conwed Design Scape, Ladysmith, WI 800-932-2383 www.conweddesignscape.com
   5. Kinetics Noise Control, Interiors Division, Dublin, OH 614-889-0480 www.kineticsnoise.com
   6. Metal Building Interiors, Cleveland, OH 216-431-6400 www.mbiproducts.com

B. Barrel Ceiling Sound Diffuser Panels:
   1. Basis of Design: Barrel Ceiling Diffuser Panels by Acoustical Solutions Inc., 2420 Grenoble Road, Richmond, VA 23294 804-346-8350 www.acousticalsolutions.com
   2. Kinetics Noise Control, Interiors Division, Dublin, OH 614-889-0480 www.kineticsnoise.com
   3. RPG Diffuser Systems, Inc., 651-C Commerce Drive, Upper Marlboro, MD 20774 301-249-0044 www.rpginc.com

C. Cementitious Wood Fiber Acoustical Wall Units
   1. Basis of Design: Tectum Inc.Contact: 105 South Sixth Street, Newark, OH 43055; Telephone: (888) 977-9691, E-mail: sales@tectum.com; website: www.tectum.com.

D. Perforated Plastic Laminate Veneer Wall Panels
   1. Basis of Design: Acoustigreen Fusion Wall Panels.Contact: 123 Columbia Court N, Chaska, MN 55318; Telephone: (888) 258-4637,; website: www.acoustigreen.com.

E. Corrugated Acoustical Metal Wall Panels
   1. Basis of Design: ALPRO Systems shall be manufactured by ALPRO Acoustical Systems, Division of Gordon, Inc., 5023 Hazel Jones Road, Bossier City, LA 71111, (888) 733-3836, FAX (800) 877-8746, www.alproacoustics.com, sales@alproacoustics.com.

2.02 FABRIC-COVERED ACOUSTICAL PANELS

A. Materials, Glass Fiber Core Panels - High School and Middle School Cafeterias:
   1. Acousti-Tack ATF; Golterman & Sabo; 2 inches thick.
   2. Glass-fiber board core, 6 to 7 lb/cu. ft. density.
   3. Tackable, impact-resistant, high-density face layer: 1/8 inch thick layer molded glass-fiberboard with min. density of 16 to 18 lb/cu. ft.
   4. Edges: Beveled.
   5. Finish: Vinyl.

B. Materials, Glass Fiber Core Panels - Performing Arts Center:
   1. Decoustics Type AP Fabric-Covered Panels.

2. Edges shall be chemically hardened to withstand moderate impact during installation and ongoing maintenance. Chemically hardened edges will be profiled as shown on the architectural drawings.
3. The panel shall be constructed of 6 to 7 lb./cu.ft (96 to 112 kg/cu.m.) density acoustically absorptive core of 1" (25mm), 1 ½" (38mm), 2" (50mm), 3" (75mm), or 4" (100mm) thickness, and finished as detailed in this section, as indicated, and scheduled. Panels shall be tackable.
4. Core shall be free of surface defects and sanded as required to a uniform thickness, which will not vary by more than +/- 0.03" (1.0mm).
5. Panel core dimensions shall be accurate to a tolerance of +/- 0.06" (1.6mm).
6. Fabric finish shall be bonded to or stretch applied over the panel face, bonded to the panel edges and returned a minimum of one inch (25mm) on the back of the panel. The finish shall be flat and wrinkle free and fully tailored at corners with no exposed darting. All finishes shall be tested for suitability (ASTM D6207) and approved for use by the panel manufacturer prior to procurement and fabrication.
7. Acoustical performance: Noise Reduction Coefficient (NRC): Per the below table when tested in accordance with ASTM C423 for Type A mounting, per ASTM E795. Panels shall have noise reduction coefficient values of the following when tested using an acoustically transparent fabric.

Panel			Frequency (Hz)							
Type	Thickness	Finish	125	250	500	1000	2000	4000	NRC	SAA
AP	1" (25mm)	Fabric	0.03	0.37	0.89	1.10	1.09	1.05	0.85	0.87
AP	1 1/2" (38mm)	Fabric	0.15	0.58	1.01	1.13	1.1	1.03	0.95	N/A
AP	2" (50mm)	Fabric	0.23	0.81	1.19	1.19	1.11	1.12	1.05	1.07
AP	3" (75mm)	Fabric	0.73	0.88	1.06	1.12	1.08	1.02	1.05	1.05
AP	4" (100mm)	Fabric	0.55	1.0	1.19	1.24	1.17	1.13	1.15	1.15

8. Mounting: Installation shall be either by use of slide and engage clips ("Z"- clips), either into a DWC-7 anti-rattle wall clip or into continuous wall track. Panel clips (DPC-3) and wall clips (DWC-7 or continuous wall track)) shall be a minimum 20 gauge satin-coat steel with wall clips mechanically mounted to the back of the panels. All fasteners (wall anchors, screws, adhesive, etc.) are to be supplied by the installing contractor.
9. Finish: Fabric Covering: Seamless fabric facing material, for stretched covering of core material, selected by Architect.
   a. Patterns: Where fabric with directional or repeating patterns or fabric with directional weave is used, mark for installation in same direction.

C. Materials, Expanded Metal Mesh Fabric Covered Acoustic Panels - Studio Theater:
1. Basis of Design: Acoustical Absorptive AP Panel by Decoustics Limited, with wrapping of woven wire mesh: "1/2" Square Opening" pattern, Plain Steel Cold Rolled by McNichols.
   a. a. NRC 0.70 for 1" panels and NRC 0.90 for 2" panels, minimum
   b. b. Location: Partial coverage of Studio Theater sidewalls.

D. Materials - Laminate veneer acoustic panels:
1. Sereno Panels as manufactured by Kinetics Noise Control.
2. Thickness: 3/4 inch.
3. Size: As indicated on the Drawings, maximum 47-7/8 inch by 95-3/4 inch.
4. Facing: Plastic laminate. (PLAM 1)
5. MDF plywood.

6. Sound Absorption: NRC 0.70 with 1 inch core. Nrc 1.00 with 2 inch core. Fiberglass core by others.
7. Mounting Accessories: As indicated on the Drawings.

2.03 BARREL CEILING SOUND DIFFUSER PANELS

A. Materials:
1. One-piece rigid E-glass
2. Panel Shape and Size: As scheduled and indicated.
3. Mounting: Suitable for support by heavy-duty T-bar ceiling suspension system.

B. Finish: Painted finish in standard or custom color or fabric-wrapped as selected by Architect.

2.04 CEMENTITIOUS WOOD FIBER ACOUSTICAL UNITS

A. Cementitious wood fiber interior panels. 2” thick standard panels. Mounting shall be C-40. Provide all fasteners, furring strips, and OCF 703 fiberglass insulation for a complete single source installation.

B. Materials:
1. Aspen wood fibers bonded with inorganic hydraulic cement.
2. Thickness: As indicated or scheduled.
3. Length and Width: As indicated or scheduled.
4. Color: As indicated or scheduled.

C. Performance Requirements
1. Minimum Sound Absorption Coefficients:

	125 Hz	250 Hz	500 Hz	1000 Hz	2000 Hz	4000 Hz	NRC
2" Panels on C-40 Mounting	0.40	0.85	0.95	0.85	0.95	0.90	0.90

D. Finish
1. Natural, painted white, fabric-wrapped, or custom colors as indicated, scheduled, or selected by Architect.

2.05 CORRUGATED ACOUSTICAL METAL WALL PANELS

A. Wall Panel System: ALPRO Acoustical Systems. Panels, J trim perimeter, corner angles and Z furring, including acoustical component shall be provided as a complete package of this work. Location: Auditorium Lobby

B. Mounting Accessories
1. Extruded aluminum, brake form aluminum or brake formed steel as manufactured by ALPRO, Division of Gordon, Inc. Accessories shall include Z-furring, J Trim and inside/outside corner angles in a size and length to completely support and finish trim the wall panels as shown in elevations. All mounting accessories shall be finished to match corrugated ALPRO Wall Panels.

C. Aluminum Extrusions shall be 6063-T6 alloy. (ASTM B 221, ASTM B 221 M)

D. General: Provide metals free from surface blemishes where exposed to view in finished unit. Surfaces that exhibit pitting, seam marks, roller marks, stains, and discolorations, or other imperfections on finished units are not acceptable. All metal shall be of the highest grade -commercial type,

E. Metal Panels

1. Aluminum sheet shall be 3003-H14 alloy, minimum 0.032", (ASTM B 209).
2. The metal acoustical Wall Panels shall be corrugated and perforated with 1/8" diameter holes on 21/64" staggered centers, approximately 13% open area.
3. The panels shall be fabricated of smooth aluminum.

F. Sound Absorption Material:
1. Provide fiberglass 2" X 2 lb. density. The fiberglass panel shall be wrapped in Class A, per ASTM E84, Black Polyethylene

G. Powder Coat Finish
1. Panels & Accessories shall receive a micro-etched pretreatment prior to receiving an electrostatically applied powder coat paint finish.
2. All cut edges, including perforated holes must be coated. Finish shall be cured and oven baked to insure paint adhesion and uniform surface hardness.
3. Color to be selected from manufacturer's standard colors.

2.06 FABRICATION OF FABRIC-COVERED ACOUSTICAL PANELS

A. Fabric Wrapped, General: Fabricate panels to sizes and configurations indicated, with fabric facing installed without sagging, wrinkles, blisters, or visible seams.
1. For panels suspended from ceiling, provide fabric covering both sides, with seams only at panel edges.

B. Tolerances: Fabricate to finished tolerance of plus or minus 1/16 inch (1.6 mm) for thickness, overall length and width, and squareness from corner to corner.

2.07 ACCESSORIES

A. Fabric Wrapped and Cementitious Wood Fiber Acoustical Wall Units:
1. Back-Mounting Accessories: Manufacturer's standard accessories for concealed support for each panel type, designed to allow panel removal, and as follows:
a. Two-part clip and base-support bracket or rail system; brackets or rails designed to support full weight of panels and clips designed for lateral support, with one part mechanically attached to back of panel and the other attached to substrate.
b. If the above is not available for a specific panel, metal impaling clips designed to support full weight of panels, mechanically attached to substrate and adhesively bonded to back of panels.
c. In all cases mounting systems are to be concealed and approved by manufacturer for proper performance.
2. Ceiling Suspension Accessories: Manufacturer's standard through-threaded eyelets bolted through concealed perimeter frame at 1/4 points on each panel, sized appropriately for weight of panels.
a. Provide galvanized wire for suspension from ceiling at heights indicated.

B. Trim Moldings: Custom wood trim moldings as detailed; finish as indicated.

C. Diffuser and Wood Fiber Panels
1. Manufacturer's standard accessories for concealed support for each panel type, designed to allow panel removal; fixing clips, furring strips, brackets, or rails as standard for manufacturer's concealed mounting systems.
a. In all cases mounting systems are to be concealed and approved by manufacturer for proper performance.
2. Ceiling Suspension Accessories: For panels supported from ceiling suspension grids, and accessories required for manufacturer's standard concealed mounting method.

a. Provide additional galvanized wire of vertical members to support additional weight of panels, as required.

PART 3 EXECUTION

3.01 EXAMINATION

A. Examine substrates for conditions detrimental to installation of acoustical panels. Proceed with installation only after unsatisfactory conditions have been corrected.

B. Panels shall be allowed to stabilize on site 24 hours prior to installation.

C. Protection: Protect all floor, wall and ceiling finishes against possible damage prior to commencing installation and during installation.

D. Do not install acoustical panels until space is enclosed and weather-proof, wet-work in space is completed and dry work above ceilings is completed and until ambient conditions of temperature and humidity will be continuously maintained at values near those indicated for final occupancy.

E. Coordinate with Other Work: Support all light fixtures, HVAC air inlet/outlet devices, speakers, signage, sprinkler heads/piping, etc. independently from panels. Contractor shall not use panels to support the weight of any other building element or component.

3.02 INSTALLATION

A. General:
1. Installation shall be in accordance with local code requirements, manufacturers instructions, and as shown on approved shop drawings, or detail sheets. Installer shall provide for shimming and adjustments as required to maintain consistent alignment of joints and of finished panel faces, and to ensure unstressed clip and mounting locations.
2. Installation shall be by factory-trained personnel or manufacturer's representatives.

B. Mounting Prefabricated Wood Fiber Acoustical Panels or Diffuser Panels:
1. Panels must only be handled by persons who are equipped as recommended by manufacturer including provisions for wearing clean light-weight gloves.
2. Install acoustical panels in locations indicated, following installation recommendations of panel manufacturer. Align panels accurately, with edges plumb and top edges level. Scribe to fit accurately at adjoining work and penetrations. Finished surfaces are to be mounted on the exposed side.
3. Lay ceiling diffuser panels in ceiling suspension grid specified under Section 09 5100 in accordance with provisions of that Section and and per panel manufacturer's instructions and recommendations.

C. Install panels and diffusers to construction tolerances of plus or minus 1/16 inch (1.6 mm) for the following:
1. Plumb and level.
2. Flatness.
3. Width of joints.

3.03 ADJUSTING

A. Following initial installation, adjust mounting hardware or suspension system so that removable panels can be removed easily, yet stay safely secured upon replacement. Adjust panels so that surfaces are aligned, flush and level or plumb and gaps in between units are of a consistent width and straight.

3.04 CLEANING

A. Clean fabric facing or other surface upon completion of installation from dust and other foreign materials, following manufacturer's instructions.

B. Remove surplus materials, trimmed portions of panels, and debris resulting from installation.

3.05 PROTECTION

A. Provide protection of installed acoustical panels until completion of the work.

B. Replace panels that cannot be cleaned and repaired to satisfaction of the Architect.

C. After installation, protect planks against dirt, water, changes in humidity and contact.

3.06 DEMONSTRATION

A. Demonstrate to the building owner or to the owner’s representative the safe and proper method for removing and replacing all types of accessible panels.

B. Supply the building owner or the owner’s representative with any special tools provided by the manufacturer required to unlatch safety hardware on accessible panels.

END OF SECTION

SECTION 09 9000
PAINTS AND COATINGS

PART 1 GENERAL

1.01 SECTION INCLUDES

A. Surface preparation.

B. Field application of paints, stains, and other coatings.

C. Surfaces to be finished are indicated in this section and on the Drawings.

1.02 RELATED REQUIREMENTS

A. Section 05 5000 - Metal Fabrications: Shop-primed items.

B. Section 05 5100 - Metal Stairs: Shop-primed items.

C. Section 09 0190 - Coating Restoration

1.03 REFERENCE STANDARDS

A. 40 CFR 59, Subpart D - National Volatile Organic Compound Emission Standards for Architectural Coatings; U.S. Environmental Protection Agency; current edition.

1.04 SUBMITTALS

A. Product Data: Provide complete list of all products to be used, with the following information for each:

1. Manufacturer's name, product name and/or catalog number, and general product category (e.g. "alkyd enamel").

B. Certification: By manufacturer that all paints and coatings comply with VOC limits specified.

C. Samples: Submit one paper "drawdown" sample, 8-1/2 by 11 inches in size, illustrating colors selected for each finishing product specified.

1. Where sheen is specified, submit samples in only that sheen.

1.05 QUALITY ASSURANCE

A. Applicator Qualifications: Company specializing in performing the work of this section with minimum 5 years experience.

B. Material Safety Data Sheets: At project site maintain file of MSDS sheets for each product used; become familiar with and follow manufacturer's stated application and safety requirements.

1.06 MOCK-UP

A. Provide wall panel, 8 feet long by 10 feet wide, illustrating coating color, texture, and finish.

B. Locate where directed.

C. Mock-up may remain as part of the Work.

1.07 DELIVERY, STORAGE, AND HANDLING

A. Deliver products to site in sealed and labeled containers; inspect to verify acceptability.

B. Container Label: Include manufacturer's name, type of paint, brand name, lot number, brand code, coverage, surface preparation, drying time, cleanup requirements, color designation, and instructions for mixing and reducing.

C. Paint Materials: Store at minimum ambient temperature of 45 degrees F and a maximum of 90 degrees F, in ventilated area, and as required by manufacturer's instructions.

1.08 FIELD CONDITIONS

A. Do not apply materials when surface and ambient temperatures are outside the temperature ranges required by the paint product manufacturer.

B. Follow manufacturer's recommended procedures for producing best results, including testing of substrates, moisture in substrates, and humidity and temperature limitations.

C. Do not apply exterior coatings during rain or snow, or when relative humidity is outside the humidity ranges required by the paint product manufacturer.

D. Minimum Application Temperatures for Latex Paints: 45 degrees F for interiors; 50 degrees F for exterior; unless required otherwise by manufacturer's instructions.

E. Provide lighting level of 80 ft candles measured mid-height at substrate surface.

1.09 EXTRA MATERIALS

A. Supply 1 gallon of each color; store where directed.

B. Label each container with color in addition to the manufacturer's label.

PART 2 PRODUCTS

2.01 MANUFACTURERS

A. Provide all paint and coating products used in any individual system from the same manufacturer.

B. Provide all paint and coating products from the same manufacturer to the greatest extent possible.

C. In the event that a single manufacturer cannot provide all specified products, minor exceptions will be permitted provided approval by Architect is obtained using the specified procedures for substitutions.

D. Paints: Acceptable manufacturers are limited to the following:
   1. Benjamin Moore & Co: www.benjaminmoore.com.
   2. Sherwin-Williams: www.sherwin-williams.com.

2.02 MATERIALS - GENERAL

A. Volatile Organic Compound (VOC) Content:
   1. Provide coatings that comply with the most stringent requirements specified in the following:
      a. 40 CFR 59, Subpart D--National Volatile Organic Compound Emission Standards for Architectural Coatings.
      b. Ozone Transport Commission (OTC) Model Rule, Architectural, Industrial, and Maintenance Coatings; www.otcair.org; specifically:
         1) Opaque, Flat: 50 g/L, maximum.
         2) Opaque, Nonflat: 150 g/L, maximum.
         3) Opaque, High Gloss: 250 g/L, maximum.
         4) Varnishes: 350 g/L, maximum.
      c. Architectural coatings VOC limits of State in which the project is located.
   2. Determination of VOC Content: Testing and calculation in accordance with 40 CFR 59, Subpart D (EPA Method 24), exclusive of colorants added to a tint base and water added at project site; or other method acceptable to authorities having jurisdiction.

B. Provide ready mixed paints and coatings .

C. Provide materials that are compatible with one another and the substrates indicated under conditions of service and application, as demonstrated by manufacturer based on testing and field experience.

2.03 PAINT SYSTEMS

A. Provide Premium Grade systems (2 top coats).

B. Provide colors as directed by Architect.
   1. Allow for minimum of five colors for each system, unless otherwise indicated, without additional cost to Owner.
   2. Extend colors to surface edges; colors may change at any edge as directed by Architect.

2.04 EXTERIOR PAINT SYSTEMS

A. SYSTEM E-1:
   1. Substrate: Structural Steel and Metal Fabrications:
   2. Applications include but are not limited to miscellaneous metal boxes and structural steel.
   3. Manufacturers and products:
      a. Sherwin Williams:
         1) 1st Coat: S-W Pro Industrial Pro-Cryl Universal Primer, B66-310 Series
         2) 2nd Coat: S-W A-100 Exterior Latex Gloss, A8 Series
         3) 3rd Coat: S-W A-100 Exterior Latex Gloss, A8 Series
      b. Benjamin Moore:
         1) 1st Coat: Moore PO6 Super Spec HP Alkyd Metal Primer
         2) 2nd Coat: 096 MoorGlo Acrylic Semi-Gloss House Paint
         3) 3rd Coat: 096 MoorGlo Acrylic Semi-Gloss House Paint

B. SYSTEM E-2:
   1. Substrate: Hollow metal door frames:
   2. Finish: Semi-Gloss.
   3. Manufacturers and Products:
      a. Sherwin Williams:
         1) 1st Coat: DTM Acrylic Primer/Finish, B66W1
         2) 2nd Coat:DTM Acrylic Gloss Coating, B66W100
         3) 3rd Coat: DTM Acrylic Gloss Coating, B66W100
      b. Benjamin Moore:
         1) 1st Coat: Moorcraft Super Spec DTM Alkyd Satin, Z163
         2) 2nd Coat:Moorcraft Super Spec Urethane Gloss Enamel, Z22
         3) 3rd Coat: Moorcraft Super Spec Urethane Gloss Enamel, Z22

C. SYSTEM E-3:
   1. Substrate: Galvanized Metal, Not Chromate Passivated:
   2. Applications include but are not limited to railings, lintels and bollards.
   3. Manufacturers and Products:
      a. Sherwin Williams:
         1) 1st Coat:S-W Pro Industrial Pro-Cryl® Primer, B66-310 Series
         2) 2nd Coat:S-W ProMar® 200 Latex Semi-Gloss, B31W2200 Series
         3) 3rd Coat:S-W ProMar® 200 Latex Semi-Gloss, B31W2200 Series
      b. Benjamin Moore:
         1) 1st Coat: Moore P04 Super Spec HP Acrylic Metal Primer
         2) 2nd Coat:Moore N096 MoorGlo Acrylic Semi-Gloss House Paint
         3) 3rd Coat:Moore N096 MoorGlo Acrylic Semi-Gloss House Paint

D. SYSTEM E-4:
1. Substrate: Glass Fiber Reinforced Cement (GFRC):
2. Applications include but are not limited to GFRC columns and bases.
3. Manufacturers and Products:
a. Sherwin Williams:
1) 1st Coat: S-W PrepRite ProBlock Latex Primer, B51 Series
2) 2nd Coat: S-W Metalatex Acrylic Semi-Gloss, B42 Series
3) 3rd Coat: S-W Metalatex Acrylic Semi-Gloss, B42 Series
b. Benjamin Moore:
1) 1st Coat: Moore 023 Fresh Start 100 percent Acrylic Primer Sealer
2) 2nd Coat: 096 MoorGlo Acrylic Semi-Gloss House Paint.
3) 3rd Coat: 096 MoorGlo Acrylic Semi-Gloss House Paint.

2.05 INTERIOR PAINT SYSTEMS

A. SYSTEM I-1:
1. Substrate: Concrete Masonry Units
2. Manufacturers and Products:
a. Sherwin Williams:
1) 1st Coat:S-W PrepRite® Block Filler, B25W25
2) 2nd Coat:S-W ProMar® 200 Latex Semi-Gloss, B20W2200 Series
3) 3rd Coat:S-W ProMar® 200 Latex Semi-Gloss, B20W2200 Series
b. Benjamin Moore:
1) 1st Coat:Moore 160 Super Spec Latex Block Filler
2) 2nd Coat:333 Regal AquaGlo Acrylic Semi-Gloss Enamel
3) 3rd Coat:333 Regal AquaGlo Acrylic Semi-Gloss Enamel

B. SYSTEM I-2
1. Substrate: Concrete Masonry Units (Epoxy paint, Semi-gloss finish)
2. Manufacturers and Products:
a. Sherwin Williams:
1) 1st Coat:S-W Heavy Duty Block Filler, B42W46
2) 2nd Coat:S-W Pro Industrial HB/ Waterbased Epoxy, B71W111/B71W100 Series
3) 3rd Coat:S-W Pro Industrial HB/ Waterbased Epoxy, B71W111/B71W100 Series
b. Benjamin Moore:
1) 1st Coat: Super Spec HP Waterborne Epoxy Block Filler P31
2) 2nd Coat:Super Spec HP Acrylic Epoxy Coating P43
3) 3rd Coat:Super Spec HP Acrylic Epoxy Coating P43

C. SYSTEM I-3
1. Substrate: Structural Steel and Metal Fabrications:
2. FInish: Semi-Gloss.
3. Manufacturers and Products:
a. Sherwin Williams:
1) 1st Coat: S-W Pro Industrial Pro-Cryl® Primer, B66-310 Series
2) 2nd Coat: S-W ProMar® 200 Latex Semi-Gloss, B31W2200 Series
3) 3rd Coat: S-W ProMar® 200 Latex Semi-Gloss, B31W2200 Series
b. Benjamin Moore:

1) 1st Coat: Moore P04 Super Spec HP Acrylic Metal Primer
2) 2nd Coat:N333 Regal AquaGlo Acrylic Semi-Gloss Enamel
3) 3rd Coat: N333 Regal AquaGlo Acrylic Semi-Gloss Enamel

D. SYSTEM I-4
1. Substrate: Hollow metal door frames:
2. Finish: Gloss.
3. Manufacturers and Products:
a. Sherwin Williams:
1) 1st Coat: DTM Acrylic Primer/Finish, B66W1
2) 2nd Coat: S-W Pro Industrial Acrylic Semi-Gloss Coating, B66-650 Series.
3) 3rd Coat: S-W Pro Industrial Acrylic Semi-Gloss Coating, B66-650 Series.
b. Benjamin Moore:
1) 1st Coat: Corotech Acrylic Metal Primer V110.
2) 2nd Coat:Corotech Acrylic DTM Enamel Semi-Gloss V331.
3) 3rd Coat: Corotech Acrylic DTM Enamel Semi-Gloss V331.

E. SYSTEM I-5
1. Substrate: Galvanized Metal, Not Chromate Passivated:
2. Applications include but are not limited to railings and exposed ductwork.
3. Manufacturers and Products:
a. Sherwin WIlliams:
1) 1st Coat:S-W Pro Industrial Pro-Cryl® Primer, B66-310 Series
2) 2nd Coat:S-W ProMar® 200 Latex Semi-Gloss, B31W2200 Series
3) 3rd Coat:S-W ProMar® 200 Latex Semi-Gloss, B31W2200 Series
b. Benjamin Moore:
1) 1st Coat: Moore P04 Super Spec HP Acrylic Metal Primer
2) 2nd Coat:N333 Regal AquaGlo Acrylic Semi-Gloss Enamel
3) 3rd Coat:N333 Regal AquaGlo Acrylic Semi-Gloss Enamel

F. SYSTEM I-6
1. Substrate: Woodwork (Opaque Semi-Gloss Finish)
2. Manufacturers and Products:
a. Sherwin Williams:
1) 1st Coat: S-W Premium Wall & Wood Primer, B28W8111
2) 2nd Coat: S-W Pro Industrial 0 VOC Semi-Gloss Acrylic B66W651 Series
3) 3rd Coat:S-W Pro Industrial 0 VOC Semi-Gloss Acrylic B66W651 Series
b. Benjamin Moore:
1) 1st Coat: Moore 023 Fresh Start 100 percent Acrylic Primer Sealer
2) 2nd Coat:N333 Regal Acrylic Latex Semi-Gloss Enamel
3) 3rd Coat: N333 Regal Acrylic Latex Semi-Gloss Enamel

G. SYSTEM I-7
1. Substrate: Woodwork (Transparent, Not Floors or Stairs):
2. Applications include but are not limited to paneling and trim:
3. Manufacturers and Products:
a. Sherwin Williams:
1) Stain: S-W Minwax 250 VOC Oil Stain
2) Sealer: Sher-Wood Natural Wood Filler
3) 2nd Coat: S-W Wood Classics® Waterborne Polyurethane Varnish, Satin
4) 3rd Coat: S-W Wood Classics® Waterborne Polyurethane Varnish, Satin

b. Benjamin Moore:
1) Stain: Moore 234 Benwood Alkyd Wood Stain
2) Sealer: Moore 413 Benwood Quick-Dry Alkyd Sanding Sealer
3) 2nd Coat: 423 Benwood Stays Clear Acrylic Low Lustre Polyurethane
4) 3rd Coat: 423 Benwood Stays Clear Acrylic Low Lustre Polyurethane

H. SYSTEM I-8
1. Substrate: Wood Floors (Transparent Finish):
2. Manufacturers and Products:
a. Sherwinn Williams:
1) 1st Coat:Minwax 250 Wood Finish Stain
2) 2nd Coat:Minwax High Build Polyurethane Varnish
3) 3rd Coat:Minwax High Build Polyurethane Varnish
b. Benjamin Moore:
1) 1st Coat: Penetrating Oil Stain
2) 2nd Coat:Permathane Satin Urethane
3) 3rd Coat:Permathane Satin Urethane

I. SYSTEM I-9
1. Substrate: Wood Stage (Opaque Finish):
2. Manufacturers and Products:
a. Sherwinn Williams:
1) 1st Coat:ProMar 200 Alkyd Undercoater 49
2) 2nd Coat:ProMar Alkyd Semi-Gloss B34WZ1101
3) 3rd Coat:ProMar Alkyd Semi-Gloss B34WZ1101
b. Benjamin Moore:
1) 1st Coat: Alkyd Enamel Underbody 135
2) 2nd Coat:Satin Impervo 235
3) 3rd Coat:Satin Impervo 235

J. SYSTEM I-10
1. Substrate: Gypsum Board (Satin Finish):
2. Applications include ceilings, soffits, and bulkheads.
3. Manufacturers and Products:
a. Sherwin Williams:
1) 1st Coat:S-W PrepRite 200 Int. Latex Primer, B28 Series
2) 2nd Coat:S-W ProMar® 200 Latex Eggshell, B20Series
3) 3rd Coat:S-W ProMar® 200 Latex Semi-Gloss, B31Series
b. Benjamin Moore:
1) 1st Coat: Moore P04 Super Spec HP Acrylic Metal Primer
2) 2nd Coat:N319 Regal Acrylic Latex Eggshell Finish Enamel
3) 3rd Coat:N319 Regal Acrylic Latex Eggshell Finish Enamel

K. SYSTEM I-11
1. Substrate: Gypsum Board (Epoxy Finish):
2. Applications include walls (typical).
3. Manufacturers and Products:
a. Sherwin Williams:
1) 1st Coat:PrepRite 200 Int Latex Primer
2) 2nd Coat:ProIndustrial Precat. WB Epoxy, S-G, Series K45
3) 3rd Coat:ProIndustrial Precat. WB Epoxy, S-G, Series K46

b. Benjamin Moore:
1) 1st Coat: Benjamin Moore Ultra Spec 500 Interior Latex Primer N534
2) 2nd Coat: Corotech Pre-Catalyzed Waterborne Epoxy Eggshell V342
3) 3rd Coat: Corotech Pre-Catalyzed Waterborne Epoxy Eggshell V342

L. SYSTEM I-12
1. Substrate: Concrete Floor (Sealed):
2. Manufacturers and Products:
a. W. R. Meadows:
1) 1st Coat:CS-309/30 Concrete Curing and Sealing Compound

M. SYSTEM I-13
1. Chroma Key Finish
2. Manufacturer and product:
a. Rosco Laboratories Inc., 52 Harbor View, Stamford, CT, USA, 06902
1) 1st Coat: Rosco Tough Prime
2) 2nd Coat: #05711 Chroma Key Green
3) 3rd Coat: #05711 Chroma Key Green
4) Over new plaster apply preliminary coat of primer, then 1st Coat noted above.
(a) Preliminary Coat: S-W PrepRite 200 Int. Latex Primer, B28 Series

PART 3 EXECUTION

3.01 SCOPE -- SURFACES TO BE FINISHED

A. Paint all exposed surfaces except where indicated not to be painted or to remain natural; the term "exposed" includes areas visible through permanent and built-in fixtures when they are in place.

B. Paint the surfaces described in PART 2, indicated on the Drawings, and as follows:
1. If a surface, material, or item is not specifically mentioned, paint in the same manner as similar surfaces, materials, or items, regardless of whether colors are indicated or not.
2. Paint surfaces behind movable equipment and furnishings the same as similar exposed surfaces.
3. Paint surfaces to be concealed behind permanently installed fixtures, equipment, and furnishings, using primer only, prior to installation of the permanent item.
4. Paint back sides of access panels and removable and hinged covers to match exposed surfaces.
5. Finish top, bottom, and side edges of exterior doors the same as exposed faces.
6. Paint all insulated and exposed pipes, conduit, boxes, insulated and exposed ducts, hangers, brackets, collars and supports, mechanical equipment, and electrical equipment occurring in finished areas to match background surfaces, unless otherwise indicated.
7. Paint shop-primed mechanical and electrical items occurring in finished areas.
8. Remove unfinished louvers, grilles, covers, and access panels on mechanical and electrical components and paint separately.
9. Paint interior surfaces of air ducts and convector and baseboard heating cabinets with flat, nonspecular black paint where visible through registers, grilles, or louvers.
10. Paint dampers exposed behind louvers, grilles, to match face panels.
11. Paint both sides and edges of plywood backboards for electrical and telephone equipment before installing equipment.

C. Do Not Paint or Finish the Following Items:

1. Items fully factory-finished unless specifically noted; factory-primed items are not considered factory-finished.
2. Items indicated to receive other finish.
3. Items indicated to remain naturally finished.
4. Fire rating labels, equipment serial number and capacity labels, and operating parts of equipment.
5. Polished and brushed stainless steel items.
6. Brick, precast concrete, integrally colored plaster.
7. Polished and brushed stainless steel, anodized aluminum, bronze, terne, and lead.
8. Acoustical materials.
9. Concealed piping, ductwork, and conduit.

3.02 EXAMINATION

A. Verify that surfaces are ready to receive Work as instructed by the product manufacturer.

B. Examine surfaces scheduled to be finished prior to commencement of work. Report any condition that may potentially affect proper application.

C. Test shop-applied primer for compatibility with subsequent cover materials; report incompatible primer conditions and submit recommended changes for Architect's approval.

D. Measure moisture content of surfaces using an electronic moisture meter. Do not apply finishes unless moisture content of surfaces are below the following maximums:
   1. Plaster and Gypsum Board: 12 percent.
   2. Masonry, Concrete, and Concrete Unit Masonry: 12 percent.
   3. Interior Wood: 15 percent, measured in accordance with ASTM D4442.

E. Measure the ph factor of concrete, masonry, and mortar before starting any finishing process.
   1. Report results in writing to Architect before starting work.
   2. If results of test indicates need for remedial action, provide written description of remedial action. If a different primer or paint systems is required, state the total cost of the change. Do not proceed with remedial action or change without receiving written authorization from Architect.

3.03 PREPARATION

A. Prepare surfaces as follows for the applicable surface and coating; if multiple preparation treatments are specified, use as many as necessary for best results; where external standards are referenced for preparation (e.g. SSPC standards), prepare as specified in those standards; comply with coating manufacturer's specific preparation methods or treatments, if any.

B. Coordinate painting work with cleaning and preparation work so that dust and other contaminants do not fall on newly painted, wet surfaces.

C. Surface Appurtenances: Prior to preparing surfaces or finishing, remove electrical plates, hardware, light fixtures, light fixture trim, escutcheons, machined surfaces, fittings, and similar items already installed that are not to be painted.
   1. If removal is impractical or impossible because of the size or weight of the item, provide surface-applied protection before preparation and finishing.
   2. After completing painting in each space or area, reinstall items removed using workers skilled in the trades involved.

D. Surfaces: Correct defects and clean surfaces which affect work of this section.

E. Marks: Seal with shellac those which may bleed through surface finishes.

F. Impervious Surfaces: Remove mildew by scrubbing with solution of tetra-sodium phosphate and bleach. Rinse with clean water and allow surface to dry.

G. Concrete, Cement Plaster and Unit Masonry Surfaces to be Painted: Remove dirt, loose mortar, scale, salt or alkali powder, and other foreign matter. Remove oil and grease with a solution of tri-sodium phosphate; rinse well and allow to dry. Remove stains caused by weathering of corroding metals with a solution of sodium metasilicate after thoroughly wetting with water. Allow to dry.

H. Gypsum Board Surfaces to be Painted: Fill minor defects with filler compound. Spot prime defects after repair.

I. Galvanized Surfaces to be Painted: Remove surface contamination and oils and wash with solvent. Apply coat of etching primer.

J. Uncoated Steel and Iron Surfaces to be Painted: Remove grease, mill scale, weld splatter, dirt, and rust. Where heavy coatings of scale are evident, remove by hand wire brushing or sandblasting; clean by washing with solvent. Apply a treatment of phosphoric acid solution, ensuring weld joints, bolts, and nuts are similarly cleaned. Prime paint entire surface; spot prime after repairs.

K. Shop-Primed Steel Surfaces to be Finish Painted: Sand and scrape to remove loose primer and rust. Feather edges to make touch-up patches inconspicuous. Clean surfaces with solvent. Prime bare steel surfaces. Re-prime entire shop-primed item.

L. Interior Wood Items to Receive Transparent Finish: Sand wood to obtain a uniform appearance before immediately starting work. Wipe off dust and grit prior to sealing, seal knots, pitch streaks, and sappy sections with sealer. Fill nail holes and cracks after sealer has dried; sand lightly between coats. Prime concealed surfaces with gloss varnish reduced 25 percent with thinner.

M. Metal Doors to be Painted: Prime metal door top and bottom edge surfaces.

3.04 APPLICATION

A. Apply products in accordance with manufacturer's instructions using the preparation, products, sheens, textures, and colors as indicated.
   1. Remove, refinish, or repaint work not complying with requirements.

B. Do not apply finishes over dirt, rust, scale, grease, moisture, scuffed surfaces, or other conditions detrimental to formation of a durable coating film; do not apply finishes to surfaces that are not dry.

C. Use applicators and methods best suited for substrate and type of material being applied and according to manufacturer's instructions.

D. Minimum Coating Thickness: Apply paint materials no thinner than manufacturer's recommended spreading rate; provide total dry film thickness of entire system as recommended by manufacturer.
   1. Number of coats and film thickness required are the same regardless of application method.
   2. If undercoats, stains, or other conditions show through final coat of paint, apply additional coats until paint film is of uniform finish, color, and appearance.
   3. Give special attention to ensure edges, corners, crevices, welds, and exposed fasteners receive dry film thickness equivalent to that of flat surfaces.

E. Apply finish to completely cover surfaces with uniform appearance without brush marks, runs, sags, laps, ropiness, holidays, spotting, cloudiness, or other surface imperfections.

1. Before applying finish coats, apply a prime coat of material recommended by manufacturer, unless the surface has been prime coated by others; where evidence of suction spots or unsealed areas in first coat appear, recoat primed and sealed surfaces to ensure finish coat with no burn through or other defects due to insufficient sealing.
2. Apply first coat to surface that has been cleaned, pretreated, or otherwise prepared as soon as practical after preparation and before subsequent surface deterioration.
3. Do not apply succeeding coats until the previous coat has cured as recommended by manufacturer.
4. Do not recoat until paint has dried to where it feels firm, does not deform or feel sticky under moderate thumb pressure, and application of another coat will not cause the undercoat to lift or lose adhesion.
5. If manufacturer's instructions recommend sanding to produce a smooth, even surface, sand between coats.
6. Before applying next coat vacuum clean surfaces of loose particles. Use tack cloth to remove dust and particles just prior to applying next coat.
7. Pigmented (Opaque) Finishes: Provide smooth, opaque surface of uniform finish, color, appearance, and coverage.

3.05 FIELD QUALITY CONTROL

A. See Section 01 4000 - Quality Requirements, for general requirements for field inspection.

B. Owner will provide field inspection.

3.06 CLEANING AND PROTECTION

A. Collect waste material which may constitute a fire hazard, place in closed metal containers, and remove daily from site.

B. At the end of each workday, remove empty cans, rags, rubbish, and other discarded paint materials from site.

C. Protect other work, whether being painted or not, against damage by painting. Correct damage by cleaning, repairing or replacing, and repainting as approved by Architect.

D. Provide "Wet Paint" signs to protect newly painted finishes. Remove temporary protective wrappings provided by others to protect their work after completing painting operations.

E. At completion of construction activities of other trades, touch up and restore damaged or defaced painted surfaces.

END OF SECTION

SECTION 10 1101
VISUAL DISPLAY BOARDS AND DISPLAY CASES

PART 1 GENERAL

1.01 SECTION INCLUDES

A. Markerboards and Tackboards.

1.02 RELATED REQUIREMENTS

A. Section 06 1000 - Rough Carpentry: Blocking and supports.

1.03 REFERENCE STANDARDS

A. ANSI A135.4 - American National Standard for Basic Hardboard; 2012.

B. ANSI A208.1 - American National Standard for Particleboard; 2009.

C. ASTM A424/A424M - Standard Specification for Steel, Sheet, for Porcelain Enameling; 2009a.

1.04 SUBMITTALS

A. Product Data: Provide manufacturer's data on markerboard, tackboard, tackboard surface covering, trim, and accessories.

B. Shop Drawings: Indicate wall elevations, dimensions, joint locations, special anchor details.

C. Samples: Submit color charts for selection of color and texture of markerboard, tackboard, tackboard surface covering, and trim.

D. Test Reports: Show conformance to specified surface burning characteristics requirements.

E. Manufacturer's printed installation instructions.

1.05 QUALITY ASSURANCE

A. Manufacturer Qualifications: Company specializing in manufacturing the products specified in this section with minimum three years documented experience.

1.06 WARRANTY

A. Provide five year warranty for markerboard to include warranty against discoloration due to cleaning, crazing or cracking, and staining.

PART 2 PRODUCTS

2.01 MANUFACTURERS

A. Visual Display Boards:
   1. Claridge Products and Equipment, Inc: www.claridgeproducts.com.
   2. Polyvision Corporation (Nelson Adams); Product Polyvision 500 Series P3 ceramicsteel boards: www.polyvision.com is the Basis of Design.
      a. Fabricators shall be limited to those approved by manufacturer.

2.02 VISUAL DISPLAY BOARDS

A. Markerboards: Porcelain enamel on steel, laminated to core.
   1. Color: As selected from manufacturer's full range.
   2. Steel Face Sheet Thickness: 24 gage, 0.0239 inch .
   3. Core: Particleboard, 1/2 inch thick, laminated to face sheet.
   4. Backing: Aluminum foil, laminated to core.
   5. Size: As indicated on drawings.
   6. Frame: Extruded aluminum, with concealed fasteners.

7. Frame Profile: Box chalktray with end closures; 1 1/2" perimeter trim
8. Frame Finish: Anodized, natural.
9. Accessories: Provide chalk tray and map rail with 2" tack strip, hanging devices for audio-visual aids.

B. Tackboards: Composition cork.
1. Cork Thickness: 1/4 inch.
2. Color: As selected from manufacturer's full range.
3. Backing: Hardboard, 1/4 inch thick, laminated to tack surface.
4. Size: As indicated on drawings.
5. Frame: Same type and finish as for markerboard.
6. Frame Profile: 1 1/2" perimeter trim.
7. Frame Finish: Anodized, natural.

C. Combination Units and Units Made of More Than One Panel: Factory-assembled markerboards and tackboards in a single frame, of materials specified above.
1. Join panels of different construction with H-shaped extruded aluminum molding finished to match frame.
2. Join panels of similar construction with butt joints, aligned and secured with steel spline concealed in edge of core.
3. Configuration: As indicated on drawings.
4. Units Too Large to Ship Assembled: Fully assembled in factory, then disassembled for shipping.

D. Corridor Tack Strips:
1. Tack strips: Polyvision 2" Aluminum Display Rail with composition cork.
2. Color: As selected from manufacturer's standard colors.
3. Quantity: Allow for 2,000 lineal feet in corridors.
4. Provide two (2) rows at each side of all corridors.

2.03 MATERIALS

A. Porcelain Enameled Steel Sheet: ASTM A424/A424M, Type I, Commercial Steel, with fired-on vitreous finish.

B. Hardboard for Chalk Surface: ANSI A135.4, Tempered type.

C. Particleboard: ANSI A208.1; wood chips, set with waterproof resin binder, sanded faces.

D. Foil Backing: Aluminum foil sheet, 0.005 inch thick.

E. Adhesives: Type used by manufacturer.

2.04 DISPLAY CASES

A. Display Cases: Polyvision HBC series, size as indicated on drawings.
1. Equivalent products of Clairidge are also acceptable.

B. Back: plywood with composition color cork tack surfaces, same as for tackboards.

C. Sides: Veneer Core Plywood: ¾" thick 7 ply birch veneer core plywood, Grade A, transparent factory finish.

D. Shelf Standards: 5/8-inch by 7/16-inch steel with anachrome finish and slots in 1-inch increments.

E. Glass (shelving and doors): ASTM C 1048, FT (fully tempered), Type I.
1. Thickness: 6 mm (1/4 inch nominal).
2. Color: Clear.

F. Glass shelving: provide 2 rows per case.

G. Aluminum Perimeter Trim: 6063-T5 alloy, 2” x 2” x 1/8” satin anodized aluminum angle mitered, with reinforced corners and mechanical fasteners

H. Sliding Door Locks: chrome plated, one per set of doors.

2.05 ACCESSORIES

A. Map Rail: Extruded aluminum, manufacturer's standard profile, with cork insert and runners for accessories; 2 inch wide, full width of frame.

B. Map Supports: Formed aluminum sliding hooks and roller brackets to fit map rail. Provide 2 per board.

C. Temporary Protective Cover: Sheet polyethylene, 8 mil thick.

D. Cleaning Instruction Plate: Provide instructions for chalkboard cleaning on a metal plate fastened to perimeter frame near chalkrail.

E. Chalk Tray: Aluminum, manufacturer's standard profile, one piece full length of chalkboard, molded ends, concealed fasteners, same finish as frame.

F. Mounting Brackets: Concealed.

PART 3 EXECUTION

3.01 EXAMINATION

A. Verify that field measurements are as indicated.

B. Verify that internal wall blocking is ready to receive work and positioning dimensions are as indicated on shop drawings.

C. Verify flat wall surface for frameless adhesive-applied boards.

3.02 INSTALLATION

A. Install boards in accordance with manufacturer's instructions.

B. Install with top of chalk tray at 30 inches above finished floor, unless otherwise noted.

C. Secure units level and plumb.

D. Butt Joints: Install with tight hairline joints.

3.03 CLEANING

A. Clean board surfaces in accordance with manufacturer's instructions.

B. Cover with protective cover, taped to frame.

C. Remove temporary protective cover at Date of Substantial Completion.

END OF SECTION

SECTION 10 2113
PLASTIC TOILET COMPARTMENTS

PART 1 GENERAL

1.01 SECTION INCLUDES

A. Solid plastic toilet compartments.

B. Urinal screens.

1.02 RELATED REQUIREMENTS

A. Section 06 1000 - Rough Carpentry: Blocking and supports.

B. Section 10 2800 - Toilet, Bath, and Laundry Accessories.

1.03 REFERENCE STANDARDS

A. ASTM A 666 - Standard Specification for Annealed or Cold-Worked Austenitic Stainless Steel Sheet, Strip, Plate, and Flat Bar; 2003.

1.04 SUBMITTALS

A. Shop Drawings: Indicate partition plan, elevation views, dimensions, details of wall supports, door swings.

B. Product Data: Provide data on panel construction, hardware, and accessories.

C. Manufacturer's Installation Instructions: Indicate perimeter conditions requiring special attention.

PART 2 PRODUCTS

2.01 MANUFACTURERS

A. Plastic Toilet Compartments:
   1. Metpar Corp: www.metpar.com.
   2. Scranton Products (Santanta/Comtec/Capital): www.scrantonproducts.com.com.
   3. General Partitions

2.02 COMPONENTS

A. Toilet Compartments: Solid molded plastic panels, doors, and pilasters, floor-mounted headrail-braced.
   1. Color: Single color as selected.

B. Door and Panel Dimensions:
   1. Thickness: 1 inch.
   2. Door Width: 24 inch.
   3. Door Width for Handicapped Use: 36 inch, out-swinging.
   4. Height: 58 inch.
   5. Thickness of Pilasters: 1 inch.

C. Urinal Screens: Wall mounted with continuous panel brackets, and floor-to-ceiling vertical upright consisting of pilaster anchored to floor and ceiling.

D. Urinal Screens: Wall mounted with continuous extruded aluminum panel brackets.

2.03 ACCESSORIES

A. Pilaster Shoes: Formed ASTM A 666, Type 304 stainless steel with No. 4 finish, 3 in high, concealing floor fastenings.
   1. Provide adjustment for floor variations with screw jack through steel saddles integral with pilaster.

B. Head Rails: Hollow anodized aluminum tube, 1 x 1-5/8 inch size, with anti-grip strips and stainless steel wall brackets.

C. Pilaster Brackets: Polished stainless steel.

D. Wall Brackets: Continuous type, polished stainless steel.
   1. Urinal screen wall brackets: continuous, extruded aluminum.

E. Attachments, Screws, and Bolts: Stainless steel, tamper proof type.
   1. For attaching panels and pilasters to brackets: Through-bolts and nuts; tamper proof.

F. Hardware: Polished stainless steel:
   1. Pivot hinges, gravity type, adjustable for door close positioning; two per door.
   2. Nylon bearings.
   3. Door Latch: Slide type with exterior emergency access feature.
   4. Door strike and keeper with rubber bumper; mounted on pilaster in alignment with door latch.
   5. Coat hook with rubber bumper; one per compartment, mounted on door.
   6. Provide door pull for outswinging doors.
   7. Provide additional door pull at interior of outswinging doors of accessible stalls.

PART 3 EXECUTION

3.01 EXAMINATION

A. Verify that field measurements are as indicated.

B. Verify correct spacing of and between plumbing fixtures.

3.02 INSTALLATION

A. Install partitions secure, rigid, plumb, and level in accordance with manufacturer's instructions.

B. Maintain 3/8 to 1/2 inch space between wall and panels and between wall and end pilasters.

C. Attach panel brackets securely to walls using anchor devices.

D. Attach panels and pilasters to brackets. Locate head rail joints at pilaster center lines.

E. Field touch-up of scratches or damaged finish will not be permitted. Replace damaged or scratched materials with new materials.

3.03 ADJUSTING

A. Adjust hinges to position doors in partial opening position when unlatched. Return out-swinging doors to closed position.

B. Adjust adjacent components for consistency of line or plane.

END OF SECTION

SECTION 10 2123
CUBICLE CURTAINS

PART 1 - GENERAL

1.01 SECTION INCLUDES

A. The fabrication, furnishing, delivery, and installation of cubicle curtains.

B. The work of this section shall include, but not necessarily be limited to the following:
   1. Cubicle curtains in Nurse area.

1.02 GENERAL REQUIREMENTS

A. Field Conditions: All bidders shall fully inform themselves of the conditions under which the work is to be performed. No additional compensation shall be allowed for any labor or item the bidder could have been fully informed of prior to the bid date

1.03 QUALITY ASSURANCE

A. Installer Qualifications: An experienced installer who has completed installation of curtains similar in material, design, and extent to that indicated for this Project and whose work has resulted in construction with a record of successful in-service performance.

B. Fire-Test-Response Characteristics: Provide curtains with the fire-test-response characteristics indicated, as determined by testing identical products per test method indicated below by UL or a testing and inspecting agency acceptable to authorities having jurisdiction. Permanently attach label to each fabric of curtain assembly indicating whether fabric is inherently and permanently flame resistant, or treated with flame-retardant chemicals, and whether it will require retreatment after designated time period or cleaning.
   1. Flame resistance ratings : passes NFPA 701

C. Cubicle curtains: Anti-Microbial Characteristics: 'No Growth' per ASTM G 21 results for fungi ATCC9642, ATCC 9644, ATCC9645.

1.04 SUBMISSIONS

A. Drawings: Submit component and installation drawings and schedules showing all information necessary to fully explain the features, appearance, function, fabrication and installation.

B. Curtain Samples for Initial Selection: Manufacturer's color charts showing the full range of colors, textures, and patterns available, together with 12-inch- square sample (any color) of each type fabric.

C. Product Certificates: Signed by manufacturers of curtains certifying that products furnished comply with requirements. Give name of flame-retardant chemical used, identification of applicator, treatment method, application date, allowable life span for treatment, and details of any restrictions and limitations.
   1. Schedule: Prior to the commencement of the installation work, the Contractor shall submit an outline of the proposed schedule and requirements for approval.

1.05 PROJECT CONDITIONS

A. Field Measurements: Verify curtain openings and dimensions of other construction by field measurements before fabrication and indicate measurements on Shop Drawings. Coordinate fabrication schedule with construction progress to avoid delaying the Work

PART 2 - PRODUCTS

2.01 CUBICLE CURTAINS AND TRACK.

A. Approved manufacturers: Interspec; Architex; Carnegie

B. Curtains:
   1. Fabric: 100% flame retardant polyester.
   2. Width: Equal to respective track length, plus minimum 20 % fullness.
   3. Length: equal to floor to ceiling length, with 20 " heading mesh, minus 10" (above floor)
   4. Mesh shall be serged to face fabric, turned and stitched with double needle lock stitch no less than 1/2 " in width.
   5. Bottom and side hems: Fabric is double folded 1 1/2" and sewn with double needle lock stitch.
   6. Vertical Seams: Seams are serged together and sewn with double needle lock stitch minimum ½" wide.
   7. Heading mesh: Provide 20" mesh, no snag, tightly woven selvedge, minimum 70% open, ½" diagonal; with 1.25 " grommet band at top edge. Color : Beige.
   8. Curtain grommets: #2 two rolled-edge, rust proof, nickel plated brass, spaced no more than 6" o/c. and machined into top header.
   9. Track:
      a. Extruded Aluminum track : 1 3/8" wide x ¾" high.
      b. Curve track: factory fabricated as required.
      c. Finish: white, baked enamel.
   10. Track accessories.
      a. Provide all required accessories to match track. End stops - removable.
      b. Fasteners: stainless steel.
   11. Curtain carriers.
      a. Two nylon rollers, nylon axle, and tangle free nylon swivel stem with chrome plated steel hook.

PART 3 - EXECUTION

3.01 INSTALLATION – CUBICLE CURTAINS

A. Install tracks level and plumb per manufacture's instructions.

B. Type: surface mounted on ceiling grid.

C. Provide adequate carriers for installation, plus 10% extra as attic stock.

3.02 LOCATION

A. Nurse Ares; Wellness Area.

3.03 CLEAN UP

A. The Contractor shall be responsible for clean up, including removal of packing materials etc. and the protection of surfaces or equipment provided by other contractors.
   1. Manuals and instruction in the care and maintenance of curtains shall be provided in accordance with Part 1 of this Specification.

END OF SECTION

SECTION 10 2239
FOLDING PANEL PARTITIONS

PART 1 GENERAL

1.01 SECTION INCLUDES

A. Folding panel partitions.

B. Ceiling track, ceiling guards, and operating hardware.

1.02 RELATED REQUIREMENTS

A. Section 06 1000 - Rough Carpentry: Wood blocking and track support shimming.

1.03 REFERENCE STANDARDS

A. ASTM E84 - Standard Test Method for Surface Burning Characteristics of Building Materials; 2016.

B. ASTM E90 - Standard Test Method for Laboratory Measurement of Airborne Sound Transmission Loss of Building Partitions and Elements; 2009 (Reapproved 2016).

C. ASTM E413 - Classification for Rating Sound Insulation; 2016.

D. ASTM E557 - Standard Guide for Architectural Design and Installation Practices for Sound Isolation between Spaces Separated by Operable Partitions; 2012.

E. ASTM E596 - Standard Test Method for Laboratory Measurement of Noise Reduction of Sound-Isolating Enclosures; 1996 (Reapproved 2016).

F. ASTM F793/F793M - Standard Classification of Wall Coverings by Use Characteristics; 2015.

1.04 SUBMITTALS

A. See Section 01 3000 - Administrative Requirements, for submittal procedures.

B. Product Data: Provide data on partition materials, operation, hardware and accessories, and colors and finishes available.

C. Shop Drawings: Indicate opening sizes, track layout, details of track and required supports, static and dynamic loads, adjacent construction and finish trim, and stacking depth.

D. Samples for Selection: Submit two samples of full manufacturer's color range for selection of colors.

E. Samples for Review: Submit two samples of surface finish, 12 by 12 inches size, illustrating quality, colors selected, texture, and weight.

F. Certificates: Certify that partition system meets or exceeds specified acoustic requirements.

G. Manufacturer's Instructions: Indicate special procedures.

H. Maintenance Data: Include recommended cleaning methods, cleaning materials, and stain removal methods. Describe cleaning materials detrimental to finish surfaces and hardware finish.

1.05 QUALITY ASSURANCE

A. Manufacturer Qualifications: Company specializing in manufacturing products specified this section with minimum three years of documented experience.

B. Installer Qualifications: Company specializing in performing work of the type specified and with at least three years of documented experience.

1.06 DELIVERY, STORAGE, AND HANDLING

A. Store products in manufacturer's unopened packaging until installation.

1.07 WARRANTY

A. See Section 01 7800 - Closeout Submittals, for additional warranty requirements.

B. Provide two year manufacturer warranty against defects in material and workmanship, excluding abuse.

PART 2 PRODUCTS

2.01 MANUFACTURERS

A. Basis of Design: Panelfold, Inc; 410PP: www.panelfold.com..

B. Other Acceptable Manufacturers:
   1. Hufcor, Inc: www.hufcor.com.
   2. Modernfold, a DORMA Group Company: www.modernfold.com.

2.02 MATERIALS

2.03 COMPONENTS

A. Operable Panel Partition: Side opening; individual panels; side stacking; manually operated.
   1. Noise Reduction Coefficient (NRC): ASTM E596, NRC of 0.65 minimum.
   2. Sound Transmission Class (STC): 48-52 calculated in accordance with ASTM E413, based on tests conducted in accordance with ASTM E90, on panel size of 100 sq ft.
   3. Surface Burning Characteristics of Panel Finish: Flame spread/Smoke developed index of 25/50, maximum, when tested in accordance with ASTM E84.
   4. Installed partition system track capable of supporting imposed loads, with maximum deflection of 1/360 of span.

B. Core: 16 gage, 0.0598 inch thick formed sheet steel frame top, bottom, jambs, and intermediates; welded construction, with acoustical insulation fill.
   1. Thickness with Finish: 3 inches.
   2. Factory applied surface finish.
   3. Trim: Trimless.
   4. Panel to Panel Seals: Grooved and gasketed astragals, with continuous flexible ribbed vinyl seal fitted to panel edge construction; color to match panel finish.

C. Track: Formed steel; 1-1/4 by 1-1/4 inch size; thickness and profile designed to support loads, steel sub-channel and track connectors.

D. Carriers: Steel, ball bearing wheels on trolley carrier at top of every second panel, sized to carry imposed loads, with threaded pendant bolt for vertical adjustment.

E. Acoustic Seals: Flexible acoustic seals at jambs, meeting mullions, ceilings, retractable floor and ceiling seals, and above track to structure acoustic seal.

F. Vinyl Coated Fabric: 1, Category VI, polyvinyl fluoride (PVC) finish for washability and improved flame retardance; color as selected by Architect from manufacturer's standard range.

G. Markerboard: Porcelain glass fiber enamel, baked to sheet panel surface, color as selected from manufacturer's standard range.

H. Accessories: White enameled ceiling closure; jamb and head molding, fittings and attachments.

PART 3 EXECUTION

3.01 EXAMINATION

A. Verify that field measurements are as indicated.

B. Verify track supports are laterally braced and will permit track to be level within 1/4 inch of required position and parallel to the floor surface.

C. Verify floor flatness of 1/8 inch in 10 feet, non-cumulative.

D. Verify wall plumbness of 1/8 inch in 10 feet, non-cumulative.

3.02 INSTALLATION

A. Install partition in accordance with manufacturer's instructions and ASTM E557.

B. Lubricate moving components.

C. Install acoustic sealant to achieve required acoustic performance.

D. Coordinate electrical connections.

3.03 ADJUSTING

A. Adjust partition assembly to provide smooth operation from stacked to full open position. Do not over-compress acoustic seals.

B. Visually inspect partition in full extended position for light leaks to identify a potential acoustical leak.

C. Adjust partition assembly to achieve lightproof seal.

3.04 CLEANING

A. Clean finish surfaces and partition accessories.

B. Condition markerboard surfaces in accordance with manufacturer's instructions.

3.05 CLOSEOUT ACTIVITIES

A. Demonstrate operation of partition and identify potential operational problems.

END OF SECTION

SECTION 10 2310
GLAZED INTERIOR WALL AND DOOR ASSEMBLIES

PART 1 GENERAL

1.01 SECTION INCLUDES

A. Frameless glazed interior door and sidelight assemblies.

1.02 RELATED REQUIREMENTS

A. Section 08 7100 - Door Hardware.

1.03 REFERENCE STANDARDS

A. ASTM B221 - Standard Specification for Aluminum and Aluminum-Alloy Extruded Bars, Rods, Wire, Profiles, and Tubes; 2014.

B. ASTM C920 - Standard Specification for Elastomeric Joint Sealants; 2014a.

C. ASTM C1036 - Standard Specification for Flat Glass; 2011.

D. ASTM C1048 - Standard Specification for Heat-Strengthened and Fully Tempered Flat Glass; 2012.

1.04 ADMINISTRATIVE REQUIREMENTS

A. Preinstallation Meeting: Convene at project site seven calendar days prior to scheduled beginning of construction activities of this section to review section requirements.
   1. Require attendance by representatives of installer and other entities directly affecting, or affected by, construction activities of this section.
   2. Notify Architect four calendar days in advance of scheduled meeting date.

1.05 SUBMITTALS

A. Product Data: Manufacturer's descriptive literature for each component in partition assembly.

B. Shop Drawings: Drawings showing layout, dimensions, identification of components, and interface with adjacent construction.
   1. Include Elevations Showing:
      a. Locations and identification of manufacturer-supplied door hardware and fittings.
      b. Locations and sizes of cut-outs and drilled holes for other door hardware.
   2. Include Details Showing:
      a. Requirements for support and bracing of overhead track.
      b. Installation details.
      c. Appearance of manufacturer-supplied door hardware and fittings.

C. Selection Samples: Two sets, representing manufacturer's full range of available metal materials and finishes.

D. Verification Samples: Two samples, minimum size of 2 inch by 3 inch, representing actual material and finish of exposed metal.

E. Certificates: Contractor to certify that installer of partition assemblies meets specified qualifications.

F. Operation and Maintenance Data: For manufacturer-supplied operating hardware.

G. Warranty Documentation: Submit manufacturer warranty and ensure that forms have been completed in Owner's name and registered with manufacturer.

H. Specimen Warranty.

I. Manufacturer's Installation Instructions: Include complete preparation, installation, and cleaning requirements.

1.06 QUALITY ASSURANCE

A. Fabricator Qualifications: Minimum three years of experience designing, assembling, and installing partition assemblies similar to those specified in this section.

1.07 DELIVERY, STORAGE, AND HANDLING

A. Store products in manufacturer's unopened packaging until installation.

1.08 WARRANTY

A. Correct defective Work within a one year period after Date of Substantial Completion.

B. Provide five year manufacturer warranty against excessive degradation of metal finishes. Include provision for replacement of units with excessive fading, chalking, or flaking.

PART 2 PRODUCTS

2.01 FRAMELESS GLAZED INTERIOR DOOR ASSEMBLIES

A. Basis of design: Design is based on an "All-Glass" Entrance Door System featuring heavy tempered glass secured to a CRL Patch Hardware System, manufactured by:
C.R. Laurence Co., Inc. (CRL)
Tel: (800) 421-6144 Fax: (800) 587-7501
Email: architectural@crlaurence.com www.crlaurence.com

B. Subject to compliance with requirements, "all-glass" entrances from other manufacturers meeting the specified requirements may be acceptable.

2.02 MATERIALS

A. Glass: Provide flat, fully tempered glass in thickness indicated for doors and sidelites. Comply with requirements of ASTM C 1048 for FT (fully tempered), Condition A (uncoated surfaces), Type 1 (transparent) Class 1 (clear) glass. Provide products of thickness indicated that have been tested for surface and edge compression according to ASTM C 1048 and for impact strength according to 16 CFR Part 1201 for Category II materials.
1. Thickness: 1/2 inch (12 mm)
2. Edge treatment: Provide machine ground and polished edges for exposed glass edges of doors and sidelites and flat ground edges for butting glass edges.

B. Prepare glazing panels for indicated fittings and hardware before tempering.

C. Temper glass materials horizontally; visible tong marks or tong mark distortions are not permitted.

D. Fittings, General: Provide CRL Door Patch Fittings in required profile, size and glass thickness as selected by the Architect. Comply with requirements indicated for kind and form of metal finish.

E. Aluminum: Provide fittings fabricated from aluminum of alloy and temper recommended by manufacturer for use intended and required for application of finish indicated, but not less than strength and durability properties specified in ASTM B221 for 6063-T5.

F. Door Patch Systems: Provide door patch systems matching metal and finish of door fittings. The system shall include, but not limited to, door patches, rails, vertical stiles, center locks, and strike housings. Comply with GANA guidelines, and hardware manufacturer requirements for size restrictions. System shall include, but not limited to, inserts, covers, and preparation.
1. 1. Profile: Rectangular

G. Accessory Fittings: Provide manufacturer's standard accessory fittings of the type indicated. Comply with requirements indicated for kind and form of metal and finish of door fittings.
   1. Overhead Door Stop: Provide overhead door stop systems.
   2. Sidelite Systems: Provide sidelite systems matching metal and finish of door fittings.

H. Anchors and Fasteners: Manufacturer's standard concealed anchors and fastenings. Do not use exposed fasteners.

2.03 FABRICATION

A. General: Fabricate all glass entrance components to designs and sizes indicated. Size of door and profile requirements of fittings and hardware are indicated on the drawings.
   1. Locate and provide holes and cutouts in glass to receive hardware before tempering glass. Do not permit cutting, drilling or other alterations to glass after tempering.
   2. Fabricate work to accommodate required fittings, hardware, anchors, reinforcement, and accessory items.

B. Prefabrication: Complete fabrication, assembly, finishing, hardware application and other work to the greatest extent possible before shipment to the project site. Disassemble components only as necessary for shipment and installation.

C. Continuity: Maintain accurate relation of planes and angles with hairline fit of contracting members.

2.04 METAL FINISHES:

A. Patch Fittings
   1. US-28 Clear Satin Anodized Aluminum Clad

2.05 FITTINGS AND HARDWARE

A. General: Provide heavy-duty hardware units as indicated, scheduled or required for operation of each type of door, including the following items of sizes, numbers and type recommended by the manufacturer for the type of service required. Provide metal and finish for exposed parts to match the finish of the door patches.

B. Locking Ladder Pulls: Pair of tubular pull handles with a small format interchangeable core (SFIC) cylinder on secure side and thumbturn on non-secure side of door, with floor mounted strike.
   1. Mounting: Vertical.
   2. Diameter: 1-3/8 inch.
   3. Length: 49 inch.
   4. Pull Material: Stainless steel.
   5. Finish: Satin.
   6. Door Thickness: 1/2 inch.
   7. Door Material: Glass.
   8. Provide accessories as required for complete installation.
   9. Manufacturers:
      a. C.R. Laurence Company, Inc;.

C. CRL/Jackson by C.R. Laurence Co., 20104M17 Adjustable Spring Power extended spindle Overhead Concealed Door Closers with adjustable spring power 1 (barrier-free) to 4 (regular) and fits into CRL Standard 4" x 1-3/4" (102 x 45 mm) Single or Double Door Headers. Closers secure to the insert in the top door patch. Comply with manufacturer's recommendations for closer size, depending upon door size, exposure to weather, and anticipated frequency of use.

PART 3 EXECUTION

3.01 EXAMINATION

A. Verify that field measurements are as indicated.

B. Verify floor flatness of 1/8 inch in 10 feet, non-cumulative.

C. Do not begin installation until supports and adjacent substrates have been properly prepared.

D. If substrate preparation is the responsibility of another installer, notify Architect of unsatisfactory preparation before proceeding.

3.02 PREPARATION

A. Clean substrates thoroughly prior to installation.

B. Prepare substrates using the methods recommended by the manufacturer for achieving acceptable result for the substrate under the project conditions.

3.03 INSTALLATION

A. Install in accordance with glazed interior wall and door assembly manufacturer's instructions.

B. Fit and align glazed interior wall and door assembly level and plumb.

3.04 ADJUSTING

A. Adjust glazed interior wall and door assembly to operate smoothly from pivoting positions.

3.05 CLEANING

A. Clean installed work to pristine condition.

3.06 CLOSEOUT ACTIVITIES

A. Demonstrate operation of glazed interior wall and door assembly and identify potential operational problems.

3.07 PROTECTION

A. Protect installed products until Date of Substantial Completion.

B. Touch-up, repair or replace damaged products before Date of Substantial Completion.

END OF SECTION

SECTION 10 2601
CORNER GUARDS

PART 1 GENERAL

1.01 SECTION INCLUDES

A. Corner guards.

1.02 RELATED REQUIREMENTS

A. Section 06 1000 - Rough Carpentry: Blocking for corner guard anchors.

1.03 REFERENCE STANDARDS

A. ASTM E84 - Standard Test Method for Surface Burning Characteristics of Building Materials; 2016.

B. ASTM E119 - Standard Test Methods for Fire Tests of Building Construction and Materials; 2016a.

1.04 SUBMITTALS

A. Product Data: Indicate physical dimensions, features, anchorage details, and rough-in measurements.

B. Samples for Initial Selection: For each type of impactresistant wall protection unit indicated.

C. Material Test Reports: For each impact-resistant plastic material.

D. Maintenance Data: Include recommended methods and frequency of maintenance for maintaining optimum condition of plastic covers under anticipated traffic and use conditions. Include precautions against using cleaning materials and methods that may be detrimental to plastic finishes and performance.

1.05 QUALITY ASSURANCE

A. Installer Qualifications: An employer of workers trained and approved by manufacturer.

B. Source Limitations: Obtain impact-resistant wallprotection units through one source from a single manufacturer.

C. FireTestResponse Characteristics: Provide impactresistant, plastic wallprotection units with surfaceburning characteristics as determined by testing identical products per ASTM E 84, NFPA 255, or UL 723 by UL or another testing and inspecting agency acceptable to authorities having jurisdiction.

1.06 DELIVERY, STORAGE, AND HANDLING

A. Store impact-resistant wall protection units in original undamaged packages and containers inside wellventilated area protected from weather, moisture, soiling, extreme temperatures, and humidity.

B. Maintain room temperature within storage area at not less than 70 deg F (21 deg C) during the period plastic materials are stored.

C. Keep plastic sheet material out of direct sunlight.

D. Store plastic wallprotection components for a minimum of 72 hours, or until plastic material attains a minimum room temperature of 70 deg F (21 deg C).

PART 2 PRODUCTS

2.01 MANUFACTURERS

A. Corner Guards:

1. Basis of Design: Construction Specialties, Inc: www.c-sgroup.com.
2. InPro Corporation: www.inprocorp.com.
3. Substitutions: See Section 01 6000 - Product Requirements.

2.02 COMPONENTS

A. Corner Guards - Stainless Steel:
1. Material: Type 304 stainless steel, No. 4 finish, 16 gage, 0.053 inch thick.
2. Width of Wings: 3-1/2 inches.
3. Corner: Radiused, 3/16"
4. Length: One piece.

2.03 FABRICATION

A. Fabricate components with tight joints, corners and seams.

B. Pre-drill holes for attachment.

C. Form end trim closure by capping and finishing smooth.

PART 3 EXECUTION

3.01 EXAMINATION

A. Verify that rough openings, concealed blocking, and anchors are correctly sized and located.

B. Verify that field measurements are as indicated on drawings.

3.02 INSTALLATION

A. Install components in accordance with manufacturer's instructions, level and plumb, secured rigidly in position to wall framing members only.

B. Position corner guard 0 inches above finished floor to 72 inches high.

3.03 SCHEDULE

A. Provide at stainless steel cornerguards at exterior corners in Culinary Arts Classroom and Kitchen.

END OF SECTION

SECTION 10 2800
TOILET ACCESSORIES

PART 1 GENERAL

1.01 SECTION INCLUDES

A. Commercial toilet accessories.

B. Electric hand dryers.

1.02 RELATED REQUIREMENTS

A. Section 06 1000 - Rough Carpentry: Concealed supports for accessories, including in wall framing and plates and above ceiling framing.

B. Section 10 2113.19 - Plastic Toilet Compartments.

1.03 REFERENCE STANDARDS

A. ASTM A269/A269M - Standard Specification for Seamless and Welded Austenitic Stainless Steel Tubing for General Service; 2015.

B. ASTM A653/A653M - Standard Specification for Steel Sheet, Zinc-Coated (Galvanized) or Zinc-Iron Alloy-Coated (Galvannealed) by the Hot-Dip Process; 2015.

C. ASTM A666 - Standard Specification for Annealed or Cold-Worked Austenitic Stainless Steel Sheet, Strip, Plate, and Flat Bar; 2015.

D. ASTM C1036 - Standard Specification for Flat Glass; 2011.

1.04 ADMINISTRATIVE REQUIREMENTS

A. Coordinate the work with the placement of internal wall reinforcement and reinforcement of toilet partitions to receive anchor attachments.

1.05 SUBMITTALS

A. See Section 01 3000 - Administrative Requirements, for submittal procedures.

B. Product Data: Submit data on accessories describing size, finish, details of function, and attachment methods.

PART 2 PRODUCTS

2.01 MANUFACTURERS

A. Basis of Design Products listed are made by Bobrick Washroom Equipment, Inc., www.bobrick.com.

B. Other Approved Manufacturers for Commercial Toilet Accessories:
   1. Bradley Corporation: www.bradleycorp.com.
   2. Substitutions: Section 01 6000 - Product Requirements.

2.02 MATERIALS

A. Accessories - General: Shop assembled, free of dents and scratches and packaged complete with anchors and fittings, steel anchor plates, adapters, and anchor components for installation.

B. Keys: Provide 2 keys for each accessory to Owner; master key lockable accessories.

C. Stainless Steel Sheet: ASTM A666, Type 304.

D. Stainless Steel Tubing: ASTM A269/A269M, Grade TP304 or TP316.

E. Galvanized Sheet Steel: Hot-dipped galvanized steel sheet, ASTM A653/A653M, with G90/Z275 coating.

F. Mirror Glass: Annealed float glass, ASTM C1036 Type I, Class 1, Quality Q2, with silvering, protective and physical characteristics complying with ASTM C1503.

G. Adhesive: Two component epoxy type, waterproof.

H. Fasteners, Screws, and Bolts: Hot dip galvanized; tamper-proof; security type.

I. Expansion Shields: Fiber, lead, or rubber as recommended by accessory manufacturer for component and substrate.

2.03 FINISHES

A. Stainless Steel: Satin finish, unless otherwise noted.

2.04 TOILET ACCESSORIES

A. Item A: Mirrors: Stainless steel framed, 6 mm thick laminated glass mirror.
   1. Product: Bobrick B-290 series, manufactured by Bobrick.
   2. Size: As shown.
   3. Frame: 0.05 inchangle shapes, with mitered and welded and ground corners, and tamperproof hanging system; No.4 finish.

B. Item B: Toilet Paper Dispenser: Single roll, surface mounted bracket type, black translucent plastic coverprovided by vendor, installed by contractor.
   1. Products:
      a. Hillyard Product No. PAP42819.

C. Toilet Paper Dispenser: Triple roll, surface mounted, for coreless type rolls, provided by vendor, installed by contractor.
   1. Products:
      a. Hillyard Product No. PAP42527.

D. Item E: Sanitary Napkin Disposal Unit: Stainless steel, surface-mounted, self-closing door, locking bottom panel with full-length stainless steel piano-type hinge, removable receptacle.
   1. Product: B-270 manufactured by Bobrick.

E. Item F: Soap Dispenser: Manual soap dispenser, wall-mounted, surface, with black plastic cover and vertical tank and working parts; push type soap valve, check valve, and window gage refill indicator.
   1. Products:
      a. Hillyard Product No. HIL22281.

F. Item G: Grab Bars: Stainless steel, 1-1/4 inches outside diameter, minimum 0.05 inch wall thickness, nonslip grasping surface finish, concealed flange mounting; 1-1/2 inches clearance between wall and inside of grab bar.
   1. Product: B-5806.99 series manufactured by Bobrick.
   2. Length and configuration: As indicated on drawings.

G. Item H: Electric Hand Dryer:
   1. Product: XLerator Automatic Hand Dryer.
      a. Model: XL-W: Surface mounted with white metal cover.
      b. Electrical: 120v. 60 Hz.
      c. Cover: Die-cast zinc alloy; One-piece, heavy-duty, rib-reinforced, lightweight, unbreakable, rustproof; all exposed surfaces shall be bright chrome plated or finished with chip-proof, electrostatically applied epoxy paint.
      d. Provide stainless steel ADA recess kit
      e. Provide noise reduction nozzle

2. Stainless Steel Backsplash: Provide stainless steel sheet behind electric hand dryer, extending from top of hand dryer to top of wall base, 16 inches wide, with hemmed edges and conccealed fasteners.

H. Item I: Waste Receptacle: Wall-mounted, stainless steel, continuously welded bottom pan, seamless exposed flanges, and hemmed top edge.
   1. Liner: Removable, heavy-duty vinyl liner, attached at a minimum of 4 points with stainless steel grommets and hooks.
   2. Minimum capacity: 12 3/4 gallons.
   3. Product: B-277 manufactured by Bobrick.

I. Item J: Combination Utility Shelf/Mop and Broom Holder: 0.05 inch thick stainless steel, Type 304, with 1/2 inch returned edges, 0.06 inch steel wall brackets.
   1. Hooks: 2, 0.06 inch stainless steel rag hooks at shelf front.
   2. Mop/broom holders: 3 spring-loaded rubber cam holders at shelf front.
   3. Length: Manufacturer's standard length for number of holders/hooks.

J. Item K: Heavy-Duty Shower Curtain Rod
   1. Product: Bobrick Model B-207, 36" length.

K. Item L: Heavy-Duty Shower Curtain Rod
   1. Product: Bobrick Model B-207, 60" length; cut to length as required.

L. Item M: Stainless Steel Shower Curtain Hooks
   1. Product: Bobrick Model 204-1

M. Item N: Vinyl Shower Curtains
   1. Product: Bobrick Models 204-2 and 204-3.

N. Item P: Robe Hook
   1. Product: Bobrick Model B-76717.

O. Item Q: Folding Shower Seat: Wall-mounted surface; welded tubular seat frame, structural support members, hinges and mechanical fasteners of Type 304 stainless steel, rectangular seat.
   1. Seat: Phenolic or polymeric composite one-piece seat or seat slats, of color as selected.
   2. Size: ADA compliant.
   3. Product: Model 9562 manufactured by Bradley Corp..

PART 3 EXECUTION

3.01 EXAMINATION

A. Verify existing conditions before starting work.

B. Verify exact location of accessories for installation.

C. For electrically-operated accessories, verify that electrical power connections are ready and in the correct locations.

D. Verify that field measurements are as indicated on drawings.

3.02 PREPARATION

A. Deliver inserts and rough-in frames to site for timely installation.

B. Provide templates and rough-in measurements as required.

3.03 INSTALLATION

A. Install accessories in accordance with manufacturers' instructions in locations indicated on the drawings.

B. Install plumb and level, securely and rigidly anchored to substrate.

C. Mounting Heights: As required by accessibility regulations, unless otherwise indicated.

3.04 PROTECTION

A. Protect installed accessories from damage due to subsequent construction operations.

END OF SECTION

SECTION 10 4400
FIRE PROTECTION SPECIALTIES

PART 1 GENERAL

1.01 SECTION INCLUDES

A. Fire extinguishers.

B. Fire extinguisher cabinets.

C. Accessories.

1.02 RELATED REQUIREMENTS

A. Section 06 1000 - Rough Carpentry: Wood blocking product and execution requirements.

B. Section 21 1200 - Fire-Suppression Standpipes: Cabinet enclosure for extinguishers.

1.03 REFERENCE STANDARDS

A. NFPA 10 - Standard for Portable Fire Extinguishers; 2013.

B. UL (DIR) - Online Certifications Directory; current listings at database.ul.com.

1.04 SUBMITTALS

A. Shop Drawings: Indicate locations of cabinets and cabinet physical dimensions.

B. Manufacturer's Installation Instructions: Indicate special criteria and wall opening coordination requirements.

C. Manufacturer's Certificate: Certify that products meet or exceed specified requirements.

D. Maintenance Data: Include test, refill or recharge schedules and re-certification requirements.

1.05 FIELD CONDITIONS

A. Do not install extinguishers when ambient temperature may cause freezing of extinguisher ingredients.

PART 2 PRODUCTS

2.01 MANUFACTURERS

A. Fire Extinguishers, Fire Extinguisher Cabinets and Accessories:
1. JL Industries, Inc: www.jlindustries.com.
2. Larsen's Manufacturing Co: www.larsensmfg.com.
3. Potter-Roemer: www.potterroemer.com.
4. Elkhart.

2.02 FIRE EXTINGUISHERS

A. Fire Extinguishers - General: Comply with product requirements of NFPA 10 and applicable codes, whichever is more stringent.

B. Dry Chemical Type Fire Extinguishers: Cast steel tank, with pressure gage.
1. Class ABC.
2. Size 10 pound multi-purpose.
3. Finish: Baked enamel, color as selected..
4. Provide one 10 lb. Dry Chemical Type Fire Extinquisher in recessed cabinet every 75 feet in corridors.

C. K Type Extinguiser: Provide Wet Chemical (WC- 6L) Class K fire extinguishers with standard bracket in kitchen. (Maximum travel distance from cooking fire hazard to extinguisher = 30')

1. Provide three (3) K Type Extinguishers (min).
2. Approved manufacturers: JL Industries, Larsen's, or Elkhart.

2.03 FIRE EXTINGUISHER CABINETS

A. Metal: Formed primed steel sheet.

B. Cabinet Configuration: Recessed.
   1. Size to accommodate accessories.
   2. Exterior nominal dimensions of 12 inch wide x 27 inch high x 8 inch deep.
   3. Trim: Flat.
   4. Provide cabinet enclosure with right angle inside corners and seams, and with formed perimeter trim and door stiles.

C. Door: 1/2 inch thick, reinforced for flatness and rigidity; latch. Hinge doors for 180 degree opening with continuous piano hinge.

D. Door Style and lock: Recess mounted, vertical duo style, 18 gauge pressed steel construction with Duo-Panel doors and emergency safety locks (such as Larsen-Loc/Saf-T-lok).

E. Verify that cabinets are sized to accommodate extinguishers.

F. Door Glazing: Float glass, clear, 1/8 inch thick, and set in resilient channel glazing gasket.

G. Lettering: Vertical, die cut, red.

H. Cabinet Mounting Hardware: Appropriate to cabinet, with pre-drilled holes for placement of anchors.

I. Weld, fill, and grind components smooth.

J. Finish of Cabinet Exterior Trim and Door: No. 4 - Brushed stainless steel.

K. Finish of Cabinet Interior: White colored enamel.

2.04 ACCESSORIES

A. Extinguisher Brackets: Formed steel, chrome-plated.

2.05 ADDITIONAL EQUIPMENT

A. Provide 4 Dry Chemical Type fire extinguishers and brackets in addition to those shown on contract documents.

PART 3 EXECUTION

3.01 EXAMINATION

A. Verify existing conditions before starting work.

B. Verify rough openings for cabinet are correctly sized and located.

3.02 INSTALLATION

A. Install in accordance with manufacturer's instructions.

B. Install cabinets plumb and level in wall openings.

C. Secure rigidly in place.

D. Place extinguishers in cabinets.

END OF SECTION

SECTION 10 5100
METAL LOCKERS

PART 1 GENERAL

1.01 SECTION INCLUDES

A. Metal bases, tops, filler panels, and related components.

1.02 RELATED REQUIREMENTS

A. Section 06 1000 - Rough Carpentry: Wood blocking and nailers.

1.03 REFERENCE STANDARDS

A. ASTM A653/A653M - Standard Specification for Steel Sheet, Zinc-Coated (Galvanized) or Zinc-Iron Alloy-Coated (Galvannealed) by the Hot-Dip Process; 2015.

1.04 SUBMITTALS

A. Product Data: Manufacturer's published data on locker construction, sizes and accessories.

B. Shop Drawings: Indicate locker plan layout and numbering plan.

C. Samples: Submit two samples 12 by 12 inches in size, ofeach color scheduled.

D. Manufacturer's Installation Instructions: Indicate component installation assembly.

1.05 DELIVERY, STORAGE, AND HANDLING

A. Protect locker finish and adjacent surfaces from damage.

PART 2 PRODUCTS

2.01 MANUFACTURERS

A. Metal Lockers:
1. ASI Lockers: www.asilockers.com
2. Lyon Workspace Products: www.lyonworkspace.com.
3. Penco Products, Inc: www.pencoproducts.com.
4. Substitutions: See Section 01 6000 - Product Requirements.

2.02 LOCKER APPLICATIONS

2.03 MATERIALS

A. Sheet Steel: ASTM A446, commercial grab, stretcher level, phosphatized; to the following minimum thicknesses:
1. Body and Shelf: 16 gage.
2. Door: 14 gage.
3. Sloping Top: 18 gage.
4. Trim: 18 gage. (vertical and/or recess)

2.04 LOCKER UNITS

A. Metal Locker Types
1. Type A (Typical)
a. 12" wide by 12" deep by 72" high single lockers, freestanding.
b. Provide Z base and continuous sloped top with closures.
c. Provide for each locker three single wall hooks, one double prong coat hook mounted to underside of shelf, and one metal number plate.
d. Basis of specification: ASI Traditional.

2.05 LOCKER COMPONENTS

A. Doors: Hollow edge construction, 1-3/16 inch thick, welded construction, channel reinforced top and bottom with intermediate stiffener ribs, grind and finish edges smooth.

B. Recessed stainless steel handle with latch arrangement for locks & number plate. Provide quiet operation by encasing exposed portion of the lifting trigger in a molded ABS thermoplastic cover that provides isolation from metal-to-metal contact and be contained in a formed 20 gauge stainless steel recessed pocket; or similar means.

C. Number Plates: Provide rectangular shaped aluminum plates. Form numbers of block font style with ADA designation, in contrasting color.

D. Provide ventilation openings at top and bottom of each locker.

E. Fabricate sloped metal tops, ends and closure pieces.

2.06 FINISHING

A. Paint locker units in colors to be selected from manufacturer's standard color selection.

PART 3 EXECUTION

3.01 EXAMINATION

A. Verify that prepared bases are in correct position and configuration.

B. Verify bases and embedded anchors are properly sized.

3.02 INSTALLATION

A. Install in accordance with manufacturer's instructions.

B. Install lockers plumb and square.

C. Place and secure on locker base. Minimum pull out force 100lbs.

D. Bolt adjoining locker units together to provide rigid installation.

E. Install end panels, filler panels, sloped tops, miscellaneous panels, and other necessary related components.

F. Install accessories.

G. Replace components that do not operate smoothly.

3.03 CLEANING

A. Clean locker interiors and exterior surfaces.

END OF SECTION

SECTION 11 1300
LOADING DOCK EQUIPMENT

PART 1 - GENERAL

1.01 SUMMARY

A. Section Includes:
   1. Dock bumpers.

B. Related Sections:
   1. Division 26 for dock lighting fixtures.

1.02 ACTION SUBMITTALS

A. Product Data: For each type of product indicated. Include construction details, material descriptions, dimensions of individual components and profiles, and finishes for loading dock equipment.

B. Shop Drawings: For loading dock equipment. Include plans, elevations, sections, details, and attachments to other work.
   1. Detail equipment assemblies and indicate dimensions, weights, loads, required clearances, method of field assembly, components, and location and size of each field connection.

1.03 INFORMATIONAL SUBMITTALS

A. Qualification Data: For qualified Installer.

B. Welding certificates.

1.04 CLOSEOUT SUBMITTALS

A. Operation and Maintenance Data: For loading dock equipment to include in operation and maintenance manuals.

1.05 QUALITY ASSURANCE

A. Installer Qualifications: Manufacturer's authorized representative who is trained and approved for installation of units required for this Project.

B. Welding Qualifications: Qualify procedures and personnel according to the following:
   1. AWS D1.1/D1.1M, "Structural Welding Code - Steel."
   2. AWS D1.3, "Structural Welding Code - Sheet Steel."

1.06 PROJECT CONDITIONS

A. Field Measurements: Verify actual dimensions of construction contiguous with loading dock equipment, including recessed pit dimensions, slopes of driveways, and heights of loading docks, by field measurements before fabrication.

PART 2 - PRODUCTS

2.01 MATERIALS

A. Steel Plates, Shapes, and Bars: ASTM 36/A 36M.

B. Rolled-Steel Floor Plate: ASTM A 786/A 786M, rolled from steel plate complying with ASTM A 572/A 572M, Grade 55.

C. Steel Tubing: ASTM A 500, cold formed.

D. Welding Rods and Bare Electrodes: Select according to AWS specifications for metal alloy welded.

2.02 DOCK BUMPERS

A. Basis-of-Design Product: Subject to compliance with requirements, provide Blue Giant Equipment Corporation; Molded Series DB413 or comparable product by one of the following:
   1. American Floor Products Company, Inc.
   2. Durable Corporation.
   3. Pawling Corporation; Architectural Products Division.

B. Molded-Rubber Bumpers: Fabricated from molded-rubber compound reinforced with nylon, rayon, or polyester cord; with Type A Shore durometer hardness of 80, plus or minus 5, when tested according to ASTM D 2240; of size and configuration indicated. Fabricate units with not less than two predrilled anchor holes.
   1. Configuration: Rectangular.
   2. Thickness: 4 inches.

C. Anchorage Devices: Hot-dip galvanized-steel anchor bolts, nuts, washers, bolts, sleeves, cast-in-place plates, and other anchorage devices as required to fasten bumpers securely in place and to suit installation type indicated.

2.03 GENERAL FINISH REQUIREMENTS

A. Finish loading dock equipment after assembly and testing.

2.04 STEEL FINISHES

A. Galvanizing: Hot-dip galvanize components as indicated to comply with the following:
   1. ASTM A 123/A 123M for iron and steel loading dock equipment.
   2. ASTM A 153/A 153M or ASTM F 2329 for iron and steel hardware for loading dock equipment.

B. Galvanized-Steel and Steel Finish: Immediately after cleaning and pretreating, apply manufacturer's standard two-coat, baked-on finish consisting of prime coat and thermosetting topcoat in manufacturer's standard color.

PART 3 - EXECUTION

3.01 EXAMINATION

A. Examine areas and conditions, with Installer present, for compliance with requirements for installation tolerances and other conditions affecting performance of loading dock equipment.

B. Proceed with installation only after unsatisfactory conditions have been corrected.

3.02 PREPARATION

A. Coordinate size and location of loading dock equipment indicated to be attached to or recessed into concrete or masonry, and furnish anchoring devices with templates, diagrams, and instructions for their installation.

3.03 INSTALLATION

A. General: Install loading dock equipment, including accessories as required for a complete installation.

B. Dock Bumpers: Attach dock bumpers to face of loading dock in a manner that complies with requirements indicated for spacing, arrangement, and position relative to top of platform and anchorage.
   1. Bolted Attachment: Attach dock bumpers to preset anchor bolts embedded in concrete or to cast-in-place inserts or threaded studs welded to embedded-steel plates or angles. If preset anchor bolts, cast-in-place inserts, or threaded studs welded to embedded-steel

plates or angles are not provided, attach dock bumpers by drilling and anchoring with expansion anchors and bolts.

3.04 ADJUSTING

A. After completing installation of exposed, factory-finished loading dock equipment, inspect exposed finishes and repair damaged finishes.

END OF SECTION

SECTION 11 2300
COMMERCIAL LAUNDRY EQUIPMENT

PART 1 GENERAL

1.01 SECTION INCLUDES

A. Washer extractors.

B. Drying tumblers.

1.02 RELATED SECTIONS

A. Section 03 3000 - Cast-in-Place Concrete: Foundation bases for equipment.

B. Division 22 Sections for service roughing-ins; drain traps; valves, pipes, and fittings; and other materials required to complete commercial laundry equipment installation.

C. Division 23 Sections for supply and exhaust fans; exhaust ductwork; and other materials required to complete commercial laundry equipment installation.

D. Division 26 Sections for wiring disconnect switches, and other electrical materials required to complete commercial laundry equipment installation.

1.03 REFERENCES

A. UL Certification: Provide electric equipment and components that are evaluated by UL for fire, and electric shock according to applicable safety standards and that are UL certified for compliance and labeled for intended use.

1.04 SUBMITTALS

A. Submit under provisions of Section 01 3000.

B. Product Data: Manufacturer's data sheets on each product to be used, including:
   1. Preparation instructions and recommendations.
   2. Storage and handling requirements and recommendations.

C. Shop Drawings: Include plans, elevations, sections, roughing-in dimensions, fabrication details, utility service requirements, and attachments to other work.

D. Coordination Drawings: Indicate locations of laundry equipment and connections to utilities, and clearance requirements for equipment access and maintenance.

E. Operation and Maintenance Data: For laundry equipment to include in emergency, operation, and maintenance manuals. Include a schedule with the following:
   1. Designation indicated on Drawings.
   2. Manufacturer's name and model number.
   3. List of factory-authorized service agencies including their addresses and telephone numbers.

1.05 DELIVERY, STORAGE, AND HANDLING

A. Store equipment on site protected from weather, direct sunlight and temperature extremes. Do not remove packaging prior to storage.

B. Consult manufacturer if machines are to be stored for an extended period of time.

1.06 PROJECT CONDITIONS

A. Maintain environmental conditions (temperature, humidity, and ventilation) within limits recommended by manufacturer for optimum results. Do not install products under environmental conditions outside manufacturer's absolute limits.

1.07 WARRANTY

A. Dryer Tumbler Parts Only: Manufacturer's standard form in which manufacturer agrees to repair or replace any part of the equipment assembly that fails within specified warranty period.
   1. Warranty Period: Three years from date of Substantial Completion.

PART 2 PRODUCTS

2.01 MANUFACTURERS

A. Basis of Design Manufacturer: UniMac, Shepard St. P. O. Box 990; Ripon, WI 54971-0990; 800-587-5458; leads@alliancels.com; www.unimac.com.

B. Other manufacturers may be approved for substitution, pending meeting the project requirements as determined by the Architect based on the Basis of Design model and manufacturer:

C. Requests for substitutions will be considered in accordance with provisions of Section 01 6000.

2.02 MATERIALS

A. Dryer Tumblers - Galvanized Steel: ASTM A 653/A 653M, G90 (Z275) coating designation; commercial-quality, cold-rolled steel that is zinc coated by the hot-dip process and chemically treated.

2.03 MID-PERFORMANCE WASHER EXTRACTOR MODELS AND COMPONENTS

A. General Characteristics:
   1. Frame: Heavy-duty structural plate steel frame.
   2. Construction: Cabinet front, top, sides and inner and outer tubs, 304 grade stainless steel.
   3. Control System: Programmable microprocessor: machine keypad, Windows PDA/laptop.
   4. Cylinder Drive: Programmable inverter drive with rotation.
   5. Chemical Supply System: Automatic flushing and connections for 4 external supply lines and control signals for 4 external supplies.
   6. Drain Valve: Automatically opens in event of power failure.

B. Basis of Design: UniMac Model No. UWN065K2M:
   1. Dry Weight Capacity: 65 lb. (30 kg).
   2. Wash Cylinder Volume: 9.61 cu. ft. (272,125 cu cm) minimum.
   3. Control: M30 system.
   4. Number and Size of Water Inlet Connections: 2 at 3/4 in (19 mm), NH male connectors.
   5. Number and Size of Drain Outlets: 1 at 3.0 in (76 mm).
   6. Drive Motor: 5 hp. (3.7 kW).
   7. G Force: 27/Very Low, 100/Low, 200/Medium.
   8. Electrical Requirements: 208v-240v/60Hz/3 phase.

C. Other Manufacturers:
   1. Huebsch, by Alliance Laundry Systems, LLC, Shepard Street, Ripon, WI 54971; 800-553-5120; www.huebsch.com.
      a. Washer Extractor: Model HCN060
   2. B & C Technologies, 17740 Ashley Drive, Panama City Beach, FL 32413; 850-249-2222; https://bandctech.com.
      a. Washer Extractor: Model HP-65

2.04 DRYER TUMBLER AND COMPONENTS

A. Dryer Tumbler General Characteristics:
   1. Construction: Heavy duty embossed steel with electrostatically applied baked enamel finish.
   2. Control System: Programmable microprocessor with 8 auto drying cycles, ability to time dry, and to dry to selectable moisture percentage setting, including variable temperature settings and wrinkle free at end of cycle until door opens or maximum of 60 minutes.
   3. Lint Filter: Self-cleaning, depositing lint to large storage area at bottom of tumbler.
   4. Reversing Operation: Required.

B. Basis of Design: UniMac Dryer Tumbler Model No. UT050:
   1. Capacity: 50 lb (22.7 kg).
   2. Lint Filter: 576 sq. in (3716 sq. cm).
   3. Door: High grade stainless steel reversible door with rubber gasket and heavy duty hinge.
   4. Heat Source: Electric 30 Kw.
   5. Exhaust Size: 8 in (203 mm).
   6. Electrical Requirements: 208v-240v/60Hz/3 phase.

C. Other Manufacturers:
   1. Huebsch, by Alliance Laundry Systems, LLC, Shepard Street, Ripon, WI 54971; 800-553-5120; www.huebsch.com.
      a. Dryer: Model HT050.
   2. B & C Technologies, 17740 Ashley Drive, Panama City Beach, FL 32413; 850-249-2222; https://bandctech.com.
      a. Dryer: Model DE-50.

PART 3 EXECUTION

3.01 EXAMINATION

A. Do not begin installation until substrates have been properly prepared.

B. Notify Architect of unsatisfactory preparation before proceeding.

3.02 PREPARATION

A. Clean surfaces thoroughly prior to installation.

B. Prepare surfaces using the methods recommended by the manufacturer for achieving the best result for the substrate under the project conditions.

3.03 INSTALLATION

A. Install in accordance with manufacturer's instructions.

B. System Startup and Commissioning: Arrange for a local manufacturer's representative to inspect machines prior to startup and operation.

3.04 PROTECTION

A. Protect installed products until completion of project.

B. Touch-up, repair or replace damaged products before Substantial Completion.

END OF SECTION

SECTION 11 4000
FOODSERVICE EQUIPMENT

PART 1 GENERAL

1.01 DESCRIPTION

A. Scope: Furnish all labor, materials, services, equipment and appliances required to provide and deliver all foodservice equipment hereinafter specified into the building, uncrate, assemble, hang, set-in-place, level, and completely install, exclusive of final utility connections.

B. Related Work Specified Elsewhere:
   1. All plumbing, electrical and ventilating work required in conjunction with commercial foodservice equipment including rough-in to points indicated on mechanical drawings, and final connections from rough-in points, electrical service to points of connection and final connections shall be by Divisions 22, 23 and 26.
   2. Refrigeration work will be done by the Kitchen Equipment Contractor except for electrical and plumbing connections to and between compressors, blower coils, controls, etc. These final connections shall be by Divisions 22 and 26.
   3. All traps, steam traps, grease traps, line strainers, tail pieces, valves, mixing valves, backflow preventor, stops, shut-offs, and fittings necessary for equipment specified will be furnished and installed under mechanical contract by Division 22 unless specifically called for otherwise under each item.
   4. All line and disconnect switches, safety cut-offs and fittings, convenience boxes or other electrical controls, fittings and connections will be furnished and installed under electrical contract by Division 26, unless specifically indicated otherwise in the item specifications. Starting switches for certain specified pieces of foodservice equipment are to be provided by Kitchen Equipment Contractor. Those starting switches, if furnished loose as standard by Foodservice Manufacturers (other than fabricated items), shall be mounted and wired complete under Division 26.
   5. Any sleeves or conduit required for refrigeration, syrup tubing, or carbonation tubing will be furnished and installed under Division 22.
   6. Unless specifically called for in the Item Specifications, ventilating fans and all duct work between same and ceiling rough-in openings, and from same to discharge opening in building will be furnished and installed by Division 22.

1.02 DEFINITIONS

A. All references to the terms "Contractor", "Kitchen Equipment Contractor", or "K.E.C." in the specifications and/or on the drawings shall be defined to mean the Kitchen Equipment Contractor.

B. All references to the term "Owner" in the specifications and/or on the drawings shall be defined to mean the Owner or Owner's designated representative and the Foodservice Equipment Consultant.

C. All references to the term "Consultant" or "Foodservice Equipment Consultant" in the specifications and/or on the drawings shall be defined to mean **NYIKOS ASSOCIATES, INC.** its employees, and authorized representatives and is referred to throughout the contract documents as if singular in number and masculine in gender.

D. The phrase "The K.E.C. shall" or "by the K.E.C.", as applicable, is understood to be included as a part of each sentence, paragraph or article of these specifications unless otherwise indicated or specified.

1.03 QUALITY ASSURANCE

A. Qualification of Suppliers:
   1. Commercial foodservice equipment suppliers shall submit satisfactory evidence of compliance with the following qualifications and conditions to be approved.
      a. Successful completion of jobs of comparable scope.
      b. Have manufacturer's authorization to distribute and install specified factory items of equipment.
      c. Maintain a permanent staff experienced in the installation of foodservice equipment and preparation of professional style rough-in drawings and brochures.
      d. Maintain or have access to fabrication shop meeting N.S.F. requirements. If other than foodservice equipment suppliers own fabrication shop, obtain Consultant approval of fabrication shop desired to be used.
      e. Maintain or have access to a readily available stock of repair and replacement parts, together with authorized service personnel.

B. Qualification of Fabricators:
   1. Fabricators shall be an N.S.F. approved organization with trained personnel and facilities to properly design, detail and fabricate equipment in accordance with the specifications and standard details contained herein.
   2. Custom fabricated equipment shall bear the National Sanitation Foundation seal of approval and listed as such under N.S.F. Standards No. 2 and No. 33.
   3. Only one (1) fabricator shall be used for this project, and all equipment will be fabricated at the same shop. Where units cannot be fully shop-fabricated, complete fabrication at project site.
   4. Acceptable fabricators are:
      a. Pro Stainless, Inc., Keyser, WV
      b. Commercial Stainless, Inc., Bloomsburg, PA
      c. Keystone Custom Fabricators, Inc.; Elizabeth, PA.
      d. Southern Equipment Fabricators, Inc.; Columbia, SC
      e. Stainless Unlimited, Inc.; Waldorf, MD
      f. Other fabricators, as approved by Consultant.

C. Qualification of Manufacturers:
   1. Manufacturers shall be regularly engaged in the production of items furnished and shall have demonstrated the capability to furnish similar equipment that performs the functions specified or indicated herein.

D. Standard Products:
   1. Materials, products, and equipment furnished under this contract shall be the standard items of manufacturers regularly engaged in the production of such materials, products, and equipment and shall be of the manufacturer's latest design that complies with the specifications which have been produced and used successfully on other projects and in similar applications.
   2. Discrepancies within contract documents should immediately be brought to the attention of the Consultant in writing for clarification prior to fabrication or ordering of standard items.

1.04 PLANS & SPECIFICATIONS

A. Specifications and drawings have been prepared to form the basis for procurement, erection, start-up and adjustment of all equipment in this contract. Plans and specifications shall be considered as mutually explanatory and work required by one, but not the other, shall be performed as though required by both. Items required by one, but not by the other shall be provided as though required by both. Work shall be accomplished as called for in specifications and shown on drawings, so that all items of equipment shall be completely functional for

purpose for which they were designed. When there is any discrepancy between drawings and specifications, drawings shall govern. Bidders should seek clarification in writing of any discrepancies from the Consultant prior to bidding.

1.05 SUBMITTALS

A. General Requirements:
   1. Assemble and submit all shop drawings, rough-in drawings, brochures, color samples, etc. as a complete package. There will be no review of partial submittals.
   2. Any and all costs, to all trades and parties involved, arising from delay of project due to non-submittal of the complete package by the K.E.C. within a reasonable time period shall be borne solely by the K.E.C.
   3. Identify each submittal by project name, date, contractor, submittal name, and any other necessary information to distinguish it from other submittals.

B. Shop Drawings:
   1. Submit shop drawings electronically in PDF format, drawn on sheets equal in size to Contract Documents of equipment specified for custom fabrication including all accessories attached to each item.
   2. Drawings shall be detailed and fully dimensioned to a minimum scale of 3/4"=1'-0" for plan and elevation views, and 1-1/2"=1'-0" for sections, based on the floor plan(s) and following item specifications. Drawings will be checked for thoroughness, accuracy, completeness, neatness, and returned for corrections, if necessary.

C. Rough-in Drawings:
   1. Submit rough-in drawings electronically in PDF format, drawn on sheets equal in size to Contract Documents of detailed arrangement plans professionally prepared from architects dimensioned plans (not traced from Contract Documents) at a minimum scale of 1/4"=1'-0".
   2. Equipment Layout Plan showing arrangement of all items specified and identified on schedule of equipment listing item number, description, quantity, manufacturer, model number, and remarks.
   3. Ventilation Plan showing dimensioned locations of all duct openings for ventilators and dishmachines identifying size, c.f.m. required (exhaust and supply), static pressures, and connection heights.
   4. Plumbing/Electrical Plans showing dimensioned locations, sizes, elevations and capacities of all utility services required for each item of equipment in relation to finished walls, columns, and heights above finished floor.
   5. Special Conditions Plan showing exact dimensions and details of all masonry bases, floor depressions, critical partition locations/heights, wall openings, reinforcing for wall and/or ceiling mounted equipment, and conduit locations for soda and compressed gas lines.

D. Equipment Brochures:
   1. Submit electronic files in PDF format of manufacturer's illustrations and technical data for approval prior to procurement. All items of Standard Manufacture shall be submitted, including items purchased to be built into fabricated equipment. Each illustration shall be marked to accurately describe the item to be furnished as specified. Include all deviations from standard information (i.e., voltage, phase, load, etc.).
   2. Include a separate information sheet ahead of each illustration sheet showing all service connection sizes, electrical requirements, loads, consumptions, and all accessories specified.
   3. Manufacturer's suggested schematic drawings for connection of mechanical and electrical services for such items as booster heaters, disposers, or any other item of equipment that may require the same.

E. Miscellaneous Shop Drawings:
   1. Submit electronic files in PDF format of manufactured equipment specified requiring clarification and approval such as, walk-in cooler/freezer drawings, ventilator drawings, utility raceway drawings, and refrigeration system drawings.

F. Operation and Maintenance Manuals:
   1. Submit electronic files in PDF format for all mechanically operated equipment of standard manufacture. Include operating and cleaning/maintenance instructions, parts listing, recommended parts inventory listing and purchase source, copy of warranties, and similar applicable information.
   2. Brochure covers shall bear the job name, date, and name of contractor.

G. Manufacturer's List:
   1. The K.E.C. shall submit electronic files in PDF format a list of all manufacturer's representatives of the food service equipment such as convection ovens, ranges, etc., and their authorized service agencies' addresses and telephone numbers; to be presented after submission of manufacture data.

H. Samples:
   1. Samples of materials, products, and fabrication methods, shall be submitted for approval upon request at no additional cost, before proceeding with work.

I. Re-submission Requirements:
   1. Shop Drawings:
      a. Revise initial drawings as required and resubmit in accordance with submittal procedures.
      b. Indicate on drawings all changes which have been made in addition to those requested by Consultant.
   2. Product Data and Samples:
      a. Submit new data and samples as required for initial submittal.
      b. Make all re-submittals within fourteen (14) working days from date of Consultants previous action.

J. Approvals:
   1. After approval of the submittals listed above, furnish as many prints and copies as are required for the various trades, the Owner, the Architect, and the Consultant.
   2. The approval of the shop drawings will be general and shall not relieve the K.E.C. of responsibility for proper fitting, finishing, quantities, and erection of work in strict accordance with the contract requirements, nor does it relieve him of the responsibility of furnishing material and workmanship not indicated on approved shop drawings but required for the completion of his work.
   3. Approval by the Consultant and/or Owner of the manufacturer's data submitted by the K.E.C. does not waive the responsibility of K.E.C. to furnish each item of equipment in complete compliance with the specifications and drawings. Discrepancies between Contract Documents and furnished equipment shall be corrected even after approval and installation of this equipment at no additional cost to the Owner.

1.06 PRODUCT DELIVERY, STORAGE AND HANDLING

A. Delivery:
   1. Equipment shall be delivered to the job site only after the building is weather-safe and vandal-safe.

B. Storage:
   1. Store equipment in an area convenient to the point of installation in such a way that it is protected from the weather and job hazards.

C. Protection:
   1. Wrapping and protective coatings shall remain on all items until ready for use and in the case of stainless steel items, until installation is complete and the job is ready for cleaning.

D. Damage:
   1. All responsibility shall rest with the K.E.C. for any damage or loss incurred prior to final acceptance. Such items as may be lost or damaged shall immediately be replaced or repaired to a new condition to the complete satisfaction of and at no additional cost to the Owner.

1.07 JURISDICTION TRADE AGREEMENTS AND RESTRICTIONS

A. Include the work specified, shown or reasonably infer able as part of foodservice equipment. Portions of this work may be subcontracted to those qualified to do such work, as may be necessary because of jurisdictional trade agreements and restrictions.

1.08 REGULATIONS AND CODES

A. Except as otherwise indicated, each item of equipment shall comply with the latest current edition of the following standards as applicable to the manufacture, fabrication, and installation of the work in this section.
   1. N.S.F. Standards: Comply with National Sanitation Foundation Standards and criteria, and provide N.S.F. "Seal of Approval" on each manufactured item and major items of custom-fabricated work.
   2. U.L. Standards: For electrical components and assemblies, provide either U.L. labeled products or, where no labeling service is available, provide a complete index of the components used as selected from the U.L. "Recognized Component Index".
   3. A.N.S.I. Standards: For gas-burning equipment, comply with A.N.S.I. Z21-Series standards. Comply with A.N.S.I. B57.1 for compressed gas cylinder connections and with applicable standards of the Compressed Gas Association for water connection air gaps and vacuum breakers.
   4. A.G.A.: All gas-fired equipment shall be A.G.A. Approved, equipped to operate on the type gas available at the job site and shall contain 100% automatic safety shut-off devices.
   5. N.F.P.A. Standards: Comply with N.F.P.A. Bulletin 96 for exhaust systems and with N.F.P.A. Bulletins 17 & 96, and U.L. 300 for fire extinguishing systems.
   6. A.S.M.E. Code: Comply with A.S.M.E. boiler code requirements for steam generating and steam heated equipment. Provide A.S.M.E. inspection, stamps, and certification of registration with National Board.
   7. National Electric Code: Comply with N.E.C. Volume 5 for electrical wiring and devices included with foodservice equipment.
   8. All authorities having jurisdiction over this type of equipment and/or installation.
   9. Where specifications and/or drawings require mechanical, electrical or refrigeration work to be performed, such work shall be done in strict conformance to other portions of the Base Building Specification which sets forth standards for this type of work.
   10. Where there exists two standards or codes for one type of work, the stricter method shall govern.

1.09 WARRANTIES

A. Warrantee in writing all equipment and fabrication against defects and workmanship for a period of two (2) years from date of acceptance.
   1. Each piece of mechanical equipment shall be listed, together with the authorized service and repair agency whom the Owner will call should malfunctions occur within the two-year (2) guarantee period.

B. Refrigeration system compressors shall be warranted for five (5) years by the manufacturer. Free refrigeration service, including parts and labor, shall be furnished for two (2) years from date of acceptance, unless otherwise specified.

1.10 JOB CONDITIONS

A. Visit the job site to field check actual wall dimensions and roughing-in and shall be responsible for fabricating and installing the equipment in accordance with the available space and utility services as they exist on the job site.

B. Check all door openings, passageways, elevators, etc., to be sure that the equipment can be conveyed to its proper location within the building and if necessary, check the possibility of holding wall erection, placement of doorjambs, windows, etc. for the purpose of moving the equipment to its proper location with the General Contractor. Any removal and rebuilding of walls, partitions, doorjambs, etc. necessary to place the equipment, or if caused by incorrect information on the Contractor's drawings, shall be done at the expense of the K.E.C., at no additional cost to the Owner.

C. Notify the Consultant and Owner before fabrication of equipment of any discrepancies between plans and specifications and actual conditions on the job.

D. Before finished floors, walls, and/or ceilings are in place, physically check the location of all "rough-ins" at the job site. Report discrepancies in writing.

E. Any changes required after fabrication has been started to ensure equipment accurately fitting the space as it exists and conforming to actual field dimensions on the job shall be made at no additional cost to the Owner.

F. If special hoisting equipment and operators are required, include such cost as part of the bid for this work.

1.11 CHANGES IN THE WORK

A. The Owner reserves the right to require reasonable modification to be made in the routing of work and relocation of equipment. This specifically refers to conditions where interference occurs or where more desirable accessibility can be obtained or whose materials cannot be installed because of structural or mechanical conditions encountered. Such changes shall be made at no additional cost to the Owner.

1.12 PATENTS

A. Hold harmless and save the Owner and its officers, consultants, servants and employees from liability of any nature or kind, including costs and expenses for or on account of any copyrighted, patented, or un-patented invention, process, trademark, design, device, material, article, or appliance manufactured or used in the performance of the contract, including its use by the Owner, unless otherwise specifically stipulated in the Contract Documents.

B. If the Contractor has information that the process or article specified is an infringement of a patent, he shall be responsible for such loss unless he promptly gives such information to the Owner in writing. The contract price shall include all royalties or costs arising from the use of any or all of the above which are, in any way, involved in the contract.

1.13 CONTRACTOR'S WARRANTY

A. The Contractor represents and warrants:
   1. That he is financially solvent and that he is experienced in and competent to perform the types of work or to furnish the plans, materials, supplies or equipment, to be so performed or furnished by him.
   2. That he is familiar with all Federal, State, municipal, and department laws, ordinances, orders, and regulations, which may, in any way, affect the work of those employed therein,

including, but not limited to, any special acts relating to the work or to the project of which it is a part.

3. That such temporary and permanent work required by the contract as is to be done by him can be satisfactorily constructed and used for the purpose for which it is intended and that such construction will not injure any person or damage any property.
4. That he has carefully examined the plans, specifications, addenda, if any, and the site of the work and that, from his own investigations, he has satisfied himself as to the nature and location of the work, the character, quality, and quantity of materials likely to be encountered, the character of equipment and other facilities needed for the performance of the work, the general and local conditions, and all other materials which may, in any way, affect the work or its performance.
5. That he has satisfied himself as to the existing openings and accesses to the foodservice area through which his equipment shall be required to pass and that he is responsible for his equipment being delivered in as many sections as necessary to conform to the available space dictated by these existing limitations.

1.14 SUBSTITUTIONS

A. Bids submitted shall be for the specific manufacturer and model, size, capacity, and accessories, as specified or shown on the drawings.

B. The K.E.C. may quote upon brands and models of equipment other than those specified as a substitute, but he must also bid the primary item. In the event that it is desired to request approval of substitute material, product, article, process, or item of equipment in lieu of that which is specified, submit a written request at the time of submitting bid on a separate sheet attached to, but not part of, the base bid, setting forth the proposed substitution in detail, including an itemized analysis of the addition or deduction in the amount of the contract, if any, which will result if the substitution is approved. Each such request shall include a complete description of the proposed substitute, the name of the material or equipment for which it is to be substituted, drawings, cuts, performance and test data and any other data or information necessary for a complete evaluation.

C. The Contractor shall be held responsible for additional costs to himself or any other prime contractor for changes required to install materials, devices, equipment, etc., which the Contractor has substituted for that specified.

D. The Owner reserves the right to award a contract or contracts based upon the inclusion or exclusion of one or more of the alternate estimates. The description of all workmanship and materials under the various headings of the specifications shall have the same meaning and force when applied to similar workmanship and materials in the alternate. If the descriptions are not specific, the workmanship shall be the best quality and the materials the best commercial grade.

E. Whenever any product is specified in the Contract Documents by reference to the name, trade name, make, or catalog number of any manufacturer or supplier, the intent is not to limit competition but to establish a standard of quality which is necessary for the project. Products of other manufacturers meeting the established criteria will be considered. However, please take note that the plumbing, electrical, steam, heating, ventilating, and air-conditioning drawings prepared by the consulting engineers, have been engineered based on the first product named under each item number designation. Therefore, any other product which is submitted for approval in lieu of the primary item specified, shall conform to the rough-in requirements established for the first product named, as well as physical size and building construction requirements.

F. Any equipment listed, which is not in accordance with the provisions of these specifications, will be rejected. If the Contractor fails to submit for approval within the specified time the list

of equipment as required herein, the Consultant shall then have the right to make the final equipment selection. The selection made by the Consultant shall strictly conform to these specifications and will be final and binding, and the items shall be furnished and installed by the Contractor without change in the contract price at the time of completion.

G. It shall be the responsibility of the K.E.C. to prove that substitutions are equal to specified items. **NYIKOS ASSOCIATES, INC.** as the Owner's representative, shall be the determining authority as to the acceptability or equality of the substitutions. No substitutions shall be approved after bids are received.

1.15 DESIGN/MODEL CHANGE, DISCONTINUED ITEMS

A. All equipment specified shall be of latest design. Any improvements made in design and construction of prefabricated items before equipment is actually delivered to the project site, shall be incorporated in equipment, at no additional cost, provided such incorporation does not delay delivery date of equipment.

B. In the event of an item being discontinued after specified and prior to delivery to project site, the K.E.C. shall be responsible for notifying the Consultant in writing of the discontinued item and request an alternate of equal performance, including all accessories, at no additional cost to the Owner.

PART 2 PRODUCTS

2.01 GENERAL

A. The equipment and its component parts shall be new and unused. All items of standard manufactured equipment shall be current models at the time of delivery. All parts subject to wear, breakage, or distortion shall be accessible for adjustment, replacement, and repair.

B. Means shall be provided to ensure adequate lubrication for all moving parts. All oil holes, grease fittings, and filler caps shall be accessible without the use of tools.

C. The design of the equipment shall be such as to provide for safe and convenient operation. Covers or other safety devices shall be provided for all items of equipment presenting safety hazards. Such guards or safety devices shall not present substantial interference to the operation of the equipment. All guards shall provide easy access to the guarded parts.

D. Trim shall not be an acceptable substitute for accuracy and neatness. When trim is required and accepted by the Consultant and the Owner in lieu of rejection of items of equipment, it shall be the K.E.C.'s responsibility to provide same at no additional cost.

E. Unless otherwise specified herein, no material lighter than #20 gauge shall be incorporated into the work. All gauges for sheet iron and sheet steel shall be U.S. Standard Gauges, and finished equipment gauge thickness shall not vary more than 5% plus or minus from the thickness indicated below.

GAUGE	THICKNESS	GAUGE	THICKNESS
#10	0.1406	#16	0.0625
#12	0.1094	#18	0.0500
#14	0.0781	#20	0.0375

F. Materials or work described in words which have a well known and acceptable trade meaning shall be held to refer to such accepted meanings.

G. Adhesives and sealants applied within the building waterproofing envelope: Comply with low-emitting requirements in Division 01 Section “Indoor Air Quality Requirements.”

H. Composite Wood and Laminating Adhesives (shop and field applied): Contain no added urea formaldehyde resins.

2.02 MATERIALS

A. Refrigeration Systems:

1. Self-contained:
   a. Whether the units be top-mounted or cabinet-mounted, they shall be started by the K.E.C. and shall be tested for maintenance of temperature.
   b. All units shall be furnished with condensate evaporators.
2. Remote: Provide and install complete refrigeration system(s), charged, started, and operating properly, according to the Item Specifications and the following.
   a. Single stage compressors with air-cooled condensers operating within the recommended range of suction discharge pressure of economical operation and within the required capacity.
   b. All units shall be new and factory assembled, to operate with the refrigerant specified. Refrigerant R-404A shall be used for all medium and low temperature applications. Due to the unsettled nature of refrigerants, no refrigerant shall be used with a phase-out date of less than ten (10) years from the date of installation.
   c. Compressors shall be accessible hermetic type, Copeland or approved equal, and shall be equipped with high-low pressure control, liquid line drier, sight glass, suction and discharge vibration eliminator, and head pressure control.
   d. The system shall have a factory mounted and pre-wired control panel complete with main fused disconnect, compressor circuit breakers, contactors, and time clocks wired for single point power connection.
   e. The supporting frame shall be constructed of structural steel, fully welded, and protected against rust and corrosion with one (1) coat primer, and two (2) coats paint, unless otherwise specified.
   f. Systems specified for outdoor installation shall be fully protected in a weather-proofed housing with louvered front panel and hinged top, constructed to resist rust and corrosion, and furnished with low ambient controls. Crankcase heater shall be provided with every compressor.
3. Where specifications call for pre-piped lines (i.e., from a fixture to a valve compartment, etc.), provide such work in strict conformance with other sections of the specifications which set forth standards for this type of work or in conformity with the requirements of the Board of Fire Underwriters or ASHRAE Standards, whichever is greater.
4. Each refrigeration item specification is written to provide minimum specifications and scope of work. All refrigeration equipment shall be designed and installed to maintain the following general temperatures unless otherwise specified.

TYPE		REFRIGERATORS	FREEZERS
a.	Walk-In	+35º F./1.7º C.	-10º F./-23.3º C.
b.	Reach-In	+35º F./1.7º C.	-10º F./-23.3º C.
c.	Undercounter	+35º F./1.7º C.	-10º F./-23.3º C.
d.	Fabricated	+35º F./1.7º C.	-10º F./-23.3º C.
e.	Cold Pans	+0º F./-17.8º C.	
f.	Work Rooms	+50º F./10º C.	

5. Provide (including payment if subcontracted) all electrical and refrigeration components needed by the completed system and complete (or have completed by the respective trades) all connections of and to said components.
6. An evaporator coil defrost system shall be provided and installed by the K.E.C. on all refrigeration systems designed to operate at an evaporator coil temperature of less than +35º F. Evaporator coil units provided without electric defrost feature shall be installed with a solenoid valve in the liquid line, controlled by the time clock so as to shut off the flow of refrigerant and allow the compressor to pump down and shut off by activation of

the pressure control switch.

7. Verify the requirements of and provide any or all additional refrigeration specialty(s) or component(s) required or recommended by the manufacturer for proper operation under the specific operating conditions and location of each system specified.
8. Verify and provide manufacturer's certification that the equipment selection hereinafter specified for each refrigeration system is properly sized and shall meet the operating requirements set forth for each system regarding maintaining specified operating temperature, hours of compressor running time, and system pressures and velocities as recommended by the equipment manufacturer(s).
9. All refrigeration systems shall be installed and wired in strict conformance with the manufacturer's instructions and recommendations.

B. Motors and Heating Elements:
1. Motors up to and including 1/2 HP shall be wired for 120 volt, single phase service. Motors larger than 1/2 HP shall be wired for 208 volt, single or three phase service as indicated. Motors shall be of the drip-proof, splash-proof, or totally enclosed type, having a continuous duty cycle and ball bearings, except small timing motors which may have sleeve bearings. All motors shall have windings impregnated to resist moisture. Motors located where subject to deposits of dust, lint, or other similar matter shall be of the totally enclosed type. Motors shall have ample power to operate the machines for which designated under full load operating conditions without exceeding their nameplate ratings. Insulation shall be N.E.M.A. Class B or better.
2. Heating elements having a connected load up to and including 1,000 watts shall be wired for 120 or 208 volt, single phase service, or as indicated on the drawings.
   a. Any heating element larger than 1,000 watts or any combination of elements in one fixture totaling more than 1,000 watts shall be wired for 208 volt single or three phase service, as indicated on the drawings.
   b. Fixtures having multiple heating elements may be wired for three phase service with the load balanced as equally as possible within the fixture.

C. Switches and Controls:
1. Provide recognized commercial grade signals, "on-off" pushbuttons or switches, and other speed and temperature controls as required for operation of each item, complete with pilot lights and permanent graphics, conspicuously labeled, to assist the user of each item.
2. Mount switches and controls directly adjacent the piece of equipment for which it involves, on operator's side of counter body apron, out of view to the public.
3. Provide on or for each motor-driven appliance or electrical heating or control unit, a suitable control switch or starter of the proper type and rating and in accordance with Underwriter's Code wherever such equipment is not built in. All other line switches, safety cut-outs, control panels, fuse boxes, other control fittings and connections, when not an integral part of the unit or furnished loose by the manufacturer will be furnished and installed by the Electrical Contractor, unless otherwise specified. All electrical controls, switches, or devices provided loose for field installation as a part of the item specified shall be installed in the field by the Contractor unless otherwise specified.
4. Appliances shall be furnished complete with motors, driving mechanisms, starters, and controllers, including master switches, timers, cut-outs, reversing mechanisms, and other electrical equipment if and as applicable.

D. Cover Plates:
1. All controls mounted on vertical surfaces of fixtures shall be set into recessed die stamped stainless steel cups, or mounted onto removable cover plates in such a fashion as to not protrude or interfere with the operation of each item.
2. Cover plates shall be furnished and installed for all electrical outlets, receptacles, switches

and controls furnished by the K.E.C., and shall match the material and finish of the equipment to which they will be fastened.

E. Wiring and Conduit:
   1. Wiring shall be properly protected in N.E.M.A. and U.L. approved metal enclosures. Only rigid steel conduit shall be used, zinc coated where unexposed and chrome plated where exposed. All wiring shall be run concealed wherever possible.
   2. All equipment furnished under this contract shall be so wired, wound, or constructed so as to conform with the electrical characteristics at the job site.
   3. Wiring and connection diagrams shall be furnished with electrically operated machines and for all electrically wired fabricated equipment.
   4. Furnish all foodservice equipment completely wired internally using wire and conduit suitable for a wet location. Where an Electrician's services are required, the work shall be done in the K.E.C.'s factory or at his expense at the job site at no additional cost to the Owner. Provide all electrical outlets and receptacles required to be mounted on or in fabricated equipment and interconnect to a master circuit breaker panel with all wires neatly tagged showing item number, voltage characteristics, and load information. Final connection shall be made by the Electrical Contractor.

F. Cords, Plugs, and Receptacles:
   1. The Electrical Contractor shall provide three- or four-wire, grounding-type receptacles for all wall and floor mounted outlets to be used for plug-in equipment with characteristics as noted on the drawings. Provide "Hubbell" three-wire or four-wire grounding-type connectors and neoprene cords installed on each item of plug-in equipment, as indicated on drawings and item specifications.
   2. K.E.C. shall coordinate with the Electrical Contractor so that the receptacles provided will match the specific plugs provided as part of the plug-in equipment. Any changes in cords and plugs required in the field due to lack of coordination between the Electrical Contractor and the K.E.C. shall be the latter's responsibility.
   3. Reduce the length of all cords furnished with the specified equipment to a suitable or appropriate length so they do not interfere with other equipment or operations.
   4. Pedestal receptacles that are part of fabricated equipment exposed to view, shall be similar to T&S Model No. B-1508DD single face, single gang or Model No. B-1528DD single face, double gang.

G. Water Inlets:
   1. Water inlets shall be located above the positive water level wherever possible to prevent siphoning of liquids into the water supply system. Wherever conditions shall require a submerged inlet, a suitable type of check valve (except in jurisdictions where check valves are prohibited) and vacuum breaker shall be placed on the fixture to form a part of same to prevent siphoning. Where exposed to view, piping and fittings shall be chrome-plated.

H. Drain Lines:
   1. Plumbing Contractor shall provide and install indirect waste lines from equipment which will discharge into floor drains or safe wastes in accordance with Plumbing Rough-In Plans, chrome-plated where exposed. Extend to a point at least 1" (or as required by local codes) above the rim of the floor drain, cut bottom on 45° angle and secure in position.
   2. All horizontal piping lines shall be run at the highest possible elevation and not less than 6" above finished floor, through equipment where possible.
   3. No exposed piping in or around fixtures or in other conspicuous places shall show tool marks of more than one thread at the fitting.
   4. All steam operating valves on or in fabricated and purchased foodservice equipment shall be provided with composition hand wheels, which shall remain reasonably cool in service.

5. Provide suitable pressure regulating valves for all equipment with such components that might reasonably be expected to be affected over a period of time by adverse pressure conditions.

I. Faucets, Valves and Fittings:
1. All sinks shall be fitted with chromium plated, swing spout faucets of same manufacturer throughout as follows, or otherwise specified in Item Specifications.
   a. Prep and Utility Sinks:
      1.) Splash-Mounted:
         a.) T&S Brass and Bronze Works, Inc., Model B-231 with aerator.
         b.) Fisher Manufacturing Company, Model 3253 with aerator.
      2.) Deck-Mounted:
         a.) T&S Brass and Bronze Works, Inc., Model B-221 with aerator.
         b.) Fisher Manufacturing Company, Model 3313 with aerator.
   b. Pot Sinks:
      1.) Splash-Mounted:
         a.) T&S Brass and Bronze Works, Inc., Model B-290.
         b.) Fisher Manufacturing Company, Model 5214.
2. Pre-Rinse Assemblies:
   a. Splash-Mounted:
      1.) T&S Brass and Bronze Works, Inc., Model B-133-BJ with B-109 wall bracket.
      2.) Fisher Manufacturing Company, Model 2210 with 2902-12 wall bracket.
   b. Deck-Mounted:
      1.) T&S Brass and Bronze Works, Inc., Model B-113-BJ with B-510 mixing valve and B-109 wall bracket.
      2.) Fisher Manufacturing Company, Model 2810 with 2805-CV mixing valve and 2902-12 wall bracket.
3. Vacuum Breakers:
   a. General Use:
      1.) Fisher Manufacturing Company, Model 3990-8000.
   b. Disposers:
      1.) Splash-Mounted:
         a.) T&S Brass and Bronze Works, Inc., Model B-455.
         b.) Fisher Manufacturing Company, Model 3990.
      2.) Deck-Mounted:
         a.) T&S Brass and Bronze Works, Inc., Model B-456.
         b.) Fisher Manufacturing Company, Model 3991.
4. Trough Inlets:
   a. Fisher Manufacturing Company, Model No. 2905.
5. Other specialty faucets, pre-rinse assemblies, vacuum breakers, and trough inlets, as specified under Item Specifications.
6. All sink compartments shall be fitted with 2" NPT male, chrome-plated, brass rotary waste valves complete with overflow assemblies and stainless steel strainers.
   a. Prep and General Utility Sinks:
      1.) Fisher Manufacturing Company, Model No. 6100.
   b. Pot Sinks:
      1.) Fisher Manufacturing Company, Model No. 6102.
7. Refer to Division 22 for all other fittings.

J. Metals and Alloys:
1. Stainless steel sheets shall conform to ASTM 240, Type 302, Condition A, 18-8, of U.S. Standard Gauges as previously indicated under paragraph 2.1.E.

a. All exposed surfaces shall have a No. 4 finish. A No. 2B finish shall be acceptable on surfaces of equipment not exposed to view.
b. All sheets shall be uniform throughout in color, finish, and appearance.
c. Rolled shapes shall be of cold rolled type conforming to ASTM A36.

2. Stainless steel tubing and pipe shall be Type 304, 18-8, having a No. 4 finish, and shall conform to either ASTM A213 if seamless or ASTM A249 if welded.
3. Where galvanized metal is specified, it shall be copper-bearing galvanized iron, cold-rolled, stretcher leveled, bonderized, re-rolled to insure a smooth surface, and used in the largest possible sizes with as few joints as necessary.
4. Galvanizing shall be applied to rolled shapes in conformance with ASTM A123, and to sheets in conformance with ASTM A526, coating designation G-90.

K. Castings:
1. Castings shall consist of corrosion resisting metal (white metal) containing not less than 30% nickel. All castings shall be rough ground, polished, and buffed to bright lustre and free from pit marks, runs, checks, burrs, and other imperfections. In lieu of corrosion resisting metal castings, die-stamped or cast 18-8 stainless steel will be acceptable.

L. Hardware and Casters:
1. All hardware shall be of heavy-duty type, satin finished chromium plated brass, cast or forged or highlighted stainless steel of uniform design. All hardware shall be a well-known brand, and shall be identified by the manufacturer's name and model number for easy replacement of broken or worn parts.
2. Casters on custom-built equipment shall be heavy-duty type, ball bearing, solid or disc wheel, with grease-proof rubber, neoprene, or polyurethane tire. Wheel shall be 5" diameter, minimum width of tread 1-3/16", minimum capacity per caster 250 pounds, unless otherwise noted.
a. Solid material wheels are to be provided with stainless steel rotating wheel guard.
b. All casters shall have sealed wheel and swivel bearings, polished plated finish and be N.S.F. approved.
c. All equipment specified with casters shall have a minimum of two (2) with brakes installed on opposite corners, unless otherwise noted.

M. Locks:
1. When specified, doors and drawers of all custom fabricated or manufactured equipment shall be provided with cylinder locks, disc tumbler type with stainless steel faceplate as manufactured by Standard-Keil Mfg. Co., or approved equal.
a. Provide two (2) sets of keys for each lock.
b. All locks shall be keyed alike, except at cashiers stations or unless otherwise specified.

N. Thermometers:
1. All fabricated refrigerated compartments shall be fitted with exterior mounted, adjustable, dial or digital thermometers with flush bezels, and shall be calibrated after installation.

O. Sealants:
1. Sealant, wherever required, shall conform to ASTM C 920; Type S Grade NS, Class 25, Use Nt, with characteristics that when fully cured and washed meets requirements of Food and Drug Administration Regulation 21 CFR 177.2600 and N.S.F. RTV-732 for use in areas where it comes in contact with food.
2. Dow-Corning #780 or General Electric "Silastic", or approved equal, in either clear or approved color to match surrounding surfaces and applied in accordance with sealant manufacturers recommendations for a smooth, sealed finish.

P. Millwork:

1. All millwork materials shall be free from defects impairing strength, durability, or appearance; straight and free from warpage; and of the best grade for their particular function. All wood shall be well seasoned, kiln dried, and shall have an average moisture content of 8%, a max. of 10% and a min. of 5%.
2. Plywood and other woodwork of treatable species, where so required by code, shall be fire-retardant treated to result in a flame spread rating of 25 or less with no evidence of significant progressive combustion when tested for 30 minutes duration under ASTM E84 and shall bear the testing laboratory mark on the surface to be concealed.
3. Concealed softwood or hardwood lumber shall be of poplar, douglas fir, basswood, red oak, birch, maple, beech or other stable wood and shall be select or better grade, unselected for color and grain, surfaced four sides, square-edged, and straight. Basswood may be used where fire-retardant materials are required.
4. Plywood for transparent finish shall conform to U.S. Product Standard PS-51-71, Type I (fully waterproofed bond), with architectural grade face veneers of species as specified, free of all pin knots, patches, color streaks and spots, sapwood, and other defects. Plywood designated to have plywood cores shall be of either 5 or 7 ply construction. Plywood so designated on the drawings and plywood not otherwise shown shall have a particle board core, cross banding of veneers, and face and back veneers. Particle board cores shall have a 45 pound density, except where the fire retardant treatment requires cores of lesser density.
5. Face veneers shall be matched for color and grain to produce balance and continuity of character. Mineral streaks and other discolorations, worm holes, ruptured grain, loose texture, doze, or shake will not be permitted. Face veneer leaves on each surface shall be full-length, book-matched, center-matched, and sequence-matched. Surfaces shall be sequence and blueprint matched. Veneers not otherwise indicated shall be plain sliced. Backing veneers for concealed surfaces shall be of a species and thickness to balance the pull of the face veneers.
6. Hardwood plywood for painted surfaces shall conform to U.S. Product Standard PS-51-71, Type I, and shall have sound birch, maple or other approved close grain hardwood faces suitable for a paint finish.
7. Perforated hardboard shall be a tempered hardboard, 1/4" thick, conforming to Federal Specification LLL-B-810B, Type I, SIS, Finish B (primed), Design B (perforated), with 1/4" diameter holes spaced on 1" centers both ways.
8. Plywood for laminate assemblies shown or specified with plywood core shall be of the 5 or 7 ply construction with sanded close-grain hardwood face and back veneers, laminated with waterproof glue, in thickness shown, conforming to U.S. Product Standard PS-51-71.
9. Particle board for plastic laminate assemblies shown or specified with particle board wood core shall conform to U.S. Product Standard CS-236-66, Type 1, or 2, Grade B (45 pound density), class 2: except where fire-retardant treatment is required the density shall conform to the treatment requirements.

Q. Plastic Laminate:
1. Plastic laminate surfaces shall be laminated with thermosetting decorative sheets of the color, pattern, and style as selected by the Architect.
   a. Horizontal surfaces shall be laminated with sheets conforming to Federal Specification L-P-508F, Style D, Type I (general purpose), Grade HP, Class 1, 1/16" thick, satin finish, with rough sanded backs.
   b. Vertical surfaces shall be laminated with sheets conforming to Federal Specification L-P-598F, Style D, Type II, (vertical Surface), Grade HP, Class 1, non-forming, satin finish, 1/32" thick or heavier.
   c. Curved surfaces shall be laminated from sheets conforming to Federal Specification L-P-508F, Style D, Type III (post-forming), Grade HP, Class 1, satin finish.

d. Balance sheets for backs in concealed locations shall be either reject material of the same type and thickness as the general purpose grade facing or may be .020" thick laminate backing sheets conforming to Federal Specification L-P-00508E, Style ND, Type V (backing sheet), Grade HP.

2. Adhesives:
   a. For application of plastic laminate to wood substrates of horizontal surfaces shall be a phenolic, resorcinol, or melamine adhesive conforming to Federal Specification MMM-A-181C, producing a waterproof bond.
   b. For applying plastic laminate to vertical surfaces shall be either a waterproof type or a water-resistant type such as a modified urea-formaldehyde resin liquid glue conforming to Federal Specification MMM-A-188C.
   c. Contact adhesive will not be acceptable.

R. Solid Surfacing:
1. Homogeneous solid sheets of filled polyester and acrylic resin complying with material and performance requirements of ANSI Z124.3, for Type 5 or Type 6, without a pre-coated finish.
2. Install as directed by manufacturer of specified material for commercial foodservice use for the areas and with the units specified and shown.
a. Especially isolate heated drop-in units per solid surfacing manufacturer’s direction. This includes any blocking, insulation, reflective tape, additional layers of material, s/s collar, etc.
3. Structural support for ½" thick counter tops must not allow more than 6" void in any direction; for 3/4" an 8" void is maximum.
4. Provide additional support around all drop-in and countertop mounted equipment to preclude future deflection of material, especially at heated units.
5. Countertop edges must be built-up to 1-1/2" with same material (or as specified). Unsupported overhanging edges must not exceed 2".
6. Typical manufacturer’s:
   a. DuPont “Corian”.
   b. Formica “Surell”.
   c. Wilsonart “Gibralter”.

2.03 FABRICATION AND MANUFACTURE

A. Materials and Workmanship:
1. Unless otherwise specified or shown on drawings, all materials shall be new, of best quality, perfect, and without flaws. Material shall be delivered and maintained on the job in an undamaged condition.
2. Fabrication shall be equal to the standards of manufacture used by all first class equipment manufacturers, performed by qualified, efficient, and skilled mechanics of the trades involved.
3. All items of standard equipment shall be the latest model at time of delivery.
4. All fabricated work shall be the product of one manufacturer of uniform design and finish.
5. Each fabricated item of equipment shall include all necessary reinforcing, bracing, and welding with the proper number and spacing of uprights and cross members for strength.
6. Wherever standard sheet sizes will permit, the tops of all tables, shelves, exterior panels of cabinet type fixtures, and all doors and drainboards shall be constructed of a single sheet of metal.
7. Except where required to be removable, all flat surfaces shall be secured to vertical and horizontal bracing members by welding or other approved means to eliminate all buckle, warp, rattle, and wobble. All equipment not braced in a rigid manner and which is subject to rattle and wobble shall be unacceptable, and the K.E.C. shall add additional bracing in

an approved manner to achieve acceptance.

B. Sanitary Construction:
   1. All fabricated equipment shall be constructed in strict compliance with the standards of the National Sanitation Foundation as outlined in their Bulletin on Food Service Equipment entitled "Standard No. 2" dated October 1952, and in compliance with the local and State Public Health Regulations in which the installation will occur.
   2. All fabricated equipment shall bear the N.S.F. "Seal of Approval".

C. Construction Methods:
   1. Welding:
      a. All welding shall be the heliarc method with welding rod of the same composition as the sheets or parts welded. Welds shall be complete, strong, and ductile with excess metal ground off and joints finished smooth to match adjoining surfaces; free of mechanical imperfections such as gas holes, pits, cracks, etc., and shall be continuously welded so that the fixtures shall appear as one-piece construction. Butt welds made by spot solder and finished by grinding shall not be acceptable.
      b. Spot welds shall have a maximum spacing of 3". Tack welds shall be of at least 1/4" length, and spaced no greater than 4" from center to center. Weld spacing at the ends of the channel battens shall not exceed 2" centers.
      c. In no case shall soldering be considered as a replacement for welding, nor shall any soldering operation be done where dependence is placed on stability and strength of the joint.
      d. Fixtures shall be shop fabricated of one piece and shipped to the job completely assembled wherever possible. Equipment too large to transport or enter the building in one piece shall be constructed so that the field joints can be welded at the job site.
      e. All exposed joints shall be ground flush with adjoining material and finished to harmonize therewith. Whenever material has been sunk or depressed by welding operation, depression shall be suitably hammered and peened flush with the adjoining surface and ground to eliminate low spots. In all cases the grain of rough grinding shall be removed by successive fine polishing operations.
      f. All unexposed welded joints on undershelves of tables or counters of stainless steel shall be suitably coated at the factory with an approved metallic-based paint.
      g. After galvanized steel members have been welded, all welds and areas where galvanizing has been damaged shall have a zinc dust coating applied in conformance with Military Specification Number MIL-P-26915.
   2. Joints:
      a. Butt joints and contact joints, wherever they occur, shall be close fitting and shall not require a filler. Wherever break bends occur, they shall be free of undue extrudence and shall not be flaky, scaly, or cracked in appearance; where such breaks do mar the uniform surface appearance of the material, all such marks shall be removed by suitable grinding, polishing, and finishing. Wherever sheared edges occur, they shall be free of burrs, fins, and irregular projections and shall be finished to obviate all danger of laceration when the hand is drawn over them. In no case shall overlapping materials be acceptable where miters or bullnosed edges occur.
      b. Field welded joints shall be ground smooth without dips and irregularities and finished to match original finish.
   3. Bolt, Screw and Rivet Construction:
      a. All exposed surfaces shall be free from bolt and screw heads. When bolts are required, they shall be of the concealed type and be of similar composition as the metal to which they are applied.
      b. Where bolt or screw threads on the interior of fixtures are visible or may come into

contact with hands or wiping cloths, they shall be capped with a stainless steel or chrome acorn nut and stainless steel lock washer.

c. If rivets are used to fasten rear paneling to the body of the fixture, such rivets shall be stainless steel. In no case shall iron rivets be used.

4. Sound Deadening:
   a. Schnee Butyl-Sealant 1/2" wide rope continuously between all frame members and underside of stainless steel table tops, overshelves and undershelves.
   b. Tighten stud bolts for maximum compression of sealant.
5. Hi-Liting:
   a. All horizontal edges of stainless steel tops, splashes, tops of raised rolled rims, and edges of all exposed doors, handles and shelf edges shall be hi-lited, in uniform design by grinding with abrasive not coarser than #240 grit, then polishing with compound to a uniform mirror finish.
6. Polishing:
   a. The grain of polishing shall run in the same direction on all horizontal and on all vertical surfaces of each item of fabricated equipment except in the case where the finish of the horizontal sections of each shall terminate in a mitered edge.
   b. Where sinks and adjacent drainboards are equipped with backsplash, the grain of the polishing shall be consistent in direction throughout the length of the backsplash and sink compartment
7. Finishes:
   a. Paint and coatings shall be of an N.S.F. approved type suitable for use in conjunction with foodservice equipment. Such paint or coating shall be durable, non-toxic, non-dusting, non-flaking and mildew resistant, shall comply with all governing regulations, and shall be applied in accordance with the manufacturers recommendations.
   b. All exterior, galvanized parts, exposed members of framework, and wrought steel pipe where specified to be painted shall be cleaned, primed with rust inhibiting primer, de-greased, and finished with two (2) coats of glossy enamel grey hammertone paint, unless otherwise noted.
   c. Where baked enamel finishes are specified, they shall be oven baked on the fixtures for a minimum of 1-1/2 hours at a minimum temperature of 300º Fahrenheit.
   d. Fabricated equipment shall be spray coated with plastic suitable for protecting the equipment during transport and installation. The coating shall be easily removable after the equipment installation is complete at the job site, and final clean-up has begun.

D. Construction:
1. Legs:
   a. All tubular stands for open base tables, sinks, or dishtables shall have legs constructed of 1-5/8" O.D. stainless steel tubing, with 1-1/4" O.D., #16 gauge stainless steel crossbracing running between legs at a point 10" above finished floor.
   b. All joints between legs and crossbracing shall be welded and ground smooth, full 360°F.
   c. The top end of legs shall be closely fitted into fully-enclosed stainless steel conical gussets no less than 3" high, similar to Klein #481-58 or #483-58, or approved equal.
   d. Gussets shall be fully welded to framing reinforcing members, so that, set screw is not visible from front.
   e. Legs without crossrails will not be accepted.
   f. Legs shall be spaced at not more than 5'-6" on centers, unless otherwise specified.
2. Feet:

a. All tubular legs will be swedged for appearance and close fit to United Show Case #BF-158, or approved equal, fully enclosed, stainless steel bullet-shaped foot.
   1.) The foot shall be threaded into a collar and completely welded inside the tubular leg to permit a maximum adjustment of 2" without any thread exposure.
   2.) Threads shall be National Course Series Class 2 fit or better, machined to prevent end play when foot is at maximum adjustment.
   3.) The bullet-shaped foot shall have slightly rounded bottom to protect the floor, and a minimum bearing surface of 3/4" diameter of stainless steel-to-floor contact.
   4.) Bottom of tubular leg shall be finished off smoothly to provide a sanitary fitting and prevent the accumulation of grease or other debris.
b. Cabinet type fixtures shall be mounted on 8" high die-stamped, sanitary, two-piece stainless steel legs no less than 2-3/4" in diameter at the top, Component Hardware #A72-0811, or approved equal.
   1.) The bottom fully enclosed, stainless steel, bullet-shaped foot threads up into the inside of the upper member, with a male threaded 5/8" bushing to permit maximum adjustment of 2" without thread exposure.
   2.) The upper section shall be stamped in a neat design with a flared inverted shoulder and fully welded to a base plate designed for anchoring to the channel underbracing.

3. Table Tops:
   a. Tables shall be constructed of stainless steel, and of a thickness not less than #14 gauge with 1-3/4" by 120º rolled edges, or as otherwise specified and detailed.
   b. All corners shall be bull-nosed and of the same radius as rolled edges.
   c. Joints where required shall be butt-welded and ground smooth to present a uniform one-piece appearance.
   d. All tops shall be reinforced on the underside with a fully welded framework of 1-1/2"x1-1/2"x1/8" galvanized steel angles with the framing extending around the top perimeter and crossbraced on 24" maximum centers.
   e. 1"x4"x1" galvanized or stainless steel, fully welded, cross channel, closed end members placed at each pair of legs with one (1) channel running lengthwise will also be acceptable.
   f. All tops shall be reinforced so that there will be no noticeable deflection.
   g. Metal tops where adjacent to walls or other items of equipment, shall be constructed with integral, coved, back and/or endsplashes as required and specified in accordance with the standard details contained herein. Close all ends of splashes.
4. Enclosed Bases:
   a. All enclosed bases or cabinet bodies shall be of seamless #18 gauge stainless steel construction, enclosed on the ends and sides as required and called for under each item.
   b. Ends of body shall terminate at front or operator's side in a 2" wide mullion, vertical, and completely enclosed. All intermediate mullions shall be completely enclosed.
   c. The bases shall be reinforced at the top with a framework of 1-1/2"x1-1/2"x1/8" galvanized angles, with all corners mitered and welded solid.
   d. Underside of top shall be reinforced with channels and gussets where necessary. Additional angles and cross members shall be provided to reinforce shelves and support tops under heavy tabletop equipment.
   e. Where sinks or other drop-in equipment occur, provide additional reinforcing extending crosswise, both sides of opening.
   f. In the case of fixtures fitting against or between walls, the bodies shall be set in 1" or 2" from the wall line, with the tops continuing to the wall line with integral, coved

splashes as specified. Extend vertical face of body to the wall line only. This will permit adjustment to wall irregularities. Vertical trim strips will not be accepted.

g. Bodies shall be fitted with counter style stainless steel legs as hereinbefore specified.

5. Drawers:
   a. Drawers, where specified, shall have removable pan inserts of #18 gauge stainless steel, and shall be approximately 20"x20"x5" deep unless otherwise specified.
      1.) Perimeter top edge shall be flanged out 1/2".
      2.) All interior horizontal corners shall be rounded on a 1" radius, and all interior vertical corners shall be rounded on a 2" radius.
   b. Fronts shall be double pan #16 gauge stainless steel construction, 1" thick, insulated with a semi-rigid, fiberglass board, unfaced, having a three-pound density.
      1.) The top of the drawer face shall be formed as an integral pull by breaking the front pan back on a 45º angle 1", then straight up 1", back to front 1", and then down at the front 3/4".
      2.) Drawer front shall have all edges and corners ground smooth with a radius edge pull.
      3.) Provide hard rubber button bumpers attached to rear of drawer face at each corner.
   c. The drawer shall have an all welded frame of 1"x1", #16 gauge stainless steel angles sized to fit the removable pan insert.
   d. Drawers shall operate on #14 gauge full-extension slides with stainless steel roller bearings with hardened and ground raceways, Component Hardware, S52 Series, or approved equal. Slides shall be pitched approximately 3/8" per foot to permit self closing action.
   e. Drawers shall be adequately and neatly fitted to the guides to permit easy operation without rattle or binding.
   f. Slides and frame shall be reinforced to support a dead weight of 150 pounds when drawer is fully extended.
   g. Adjustable stops shall be provided for each drawer at the fully-opened position, and be readily liftable by hand for easy removal of drawer.
   h. All drawers not mounted inside a cabinet body shall be completely enclosed in an #18 gauge stainless steel box-type enclosure and suspended from angle framing under the fixture top. The housing bottom shall be flanged and welded to an #18 gauge stainless steel reinforcing channel extending across the open end.
6. Sliding Doors:
   a. Sliding doors shall be of the double pan type, with the exterior pan constructed of #18 gauge stainless steel with all four sides channeled and corners welded. The interior pan shall be similarly constructed of #20 gauge stainless steel, set into the exterior pan, and welded in place.
   b. All doors shall be insulated with semi-rigid fiberglass board, un-faced, having a three-pound density. Styrofoam shall not be acceptable.
   c. Doors 18" wide or greater, shall have internally welded 4" wide reinforcing channels to prevent warpage.
   d. Each door shall be fitted with a positive flush-type stainless steel pull, Standard-Kiel #1262-1014-1283 recessed handle, or approved equal.
   e. In the back of each door install a 1"x1", #16 gauge stainless steel angle stop welded in a suitable location to prevent the doors from overpassing the flush pulls.
   f. Doors in the closed position shall overlap each other by no more than 2".
   g. Each door shall be fitted with two (2), 1-3/8" ball bearing sheaves fastened to 1"x1/8" stainless steel bar stock welded to the top corners of each door for suspending on an overhead #16 gauge stainless steel channel track. The hangers shall be tapped for

1/4"-20 thumb screw vertical locks which prevent the doors from jumping the track in operation while permitting easy removal for cleaning without tools.

h. Insure that the bottom of the doors are positively and continuously guided to assure proper alignment and passing regardless of the position of each door.
i. Provide hard rubber bumpers for doors to close against to insure quiet operation.

7. Hinged Doors:
   a. Hinged doors shall be of the same materials and construction as sliding doors previously specified.
   b. Hinges shall be heavy duty, stainless steel, removable type, and fastened by tapping into 1/4"x3/4" stainless steel bar stock inside the door pan and behind the door jamb.
   c. The door face shall be flush with the cabinet body when fully closed.
   d. Size widths of doors equally when installed in pairs, or in series with other pairs, with no door being greater than 36" in width.
   e. Doors shall be held closed by permanent magnetic closure devices of an approved type and of sufficient strength to hold the doors shut. Install two (2) per door (minimum), mounted to the door jamb, top and bottom, with opposing chrome-plated steel plates securely fastened to the inner panel of the doors.
8. Undershelves:
   a. All open base tables shall be provided with full-length undershelves of #16 gauge stainless steel fully welded to legs with all joints ground smooth and polished.
   b. Front edge shall turn down 1-1/2" and under 1/2".
   c. Turn up rear and ends 2", with integral coved radius, when specified.
   d. If required by width, provide 1-1/2"x1-1/2"x1/8" galvanized angle bracing mounted to underside, full length.
9. Interior Shelves:
   a. All interior shelves within cabinet bodies, enclosed bases and overhead cabinets, shall be of #16 gauge stainless steel.
   b. Removable shelves shall be constructed in equal sections, and rest in 1-1/2"x1-1/2"x1/8" stainless steel angle frame. Cove all horizontal corners in accordance with N.S.F. requirements.
   c. Stationary shelves shall have 2" turn-up on back and ends, and continuously welded to cabinet body, polished and ground smooth to form a one-piece interior free of any crevices.
   d. Front edge shall turn down 1-1/2" and under 1/2", and finished with "z" bar forming completely enclosed edge for maximum strength and sanitation.
   e. Provide 1-1/2"x1-1/2"x1/8" angle bracing mounted to underside, full length.
10. Elevated Shelves:
   a. Shelves over equipment not adjacent to a wall shall be mounted on 1" diameter #16 gauge stainless steel tubular standards neatly fitted with stainless steel base flanges, unless otherwise specified.
   b. The top of the tubular standards shall be completely welded to #14 gauge stainless steel support channels, full width of overshelf.
   c. Inside the tubular standard, and welded to same, provide 1/2" diameter steel tension rod extended through countertop and securely anchored to lower framework reinforcing with nuts and lock washers in such a manner as to assure a stable, sway-free structure.
   d. If required by width, provide 1-1/2"x1-1/2"x1/8" stainless steel angle bracing mounted to underside, full length.
   e. Cantilevered shelves, when called for, shall be #16 gauge stainless steel supported on #14 gauge stainless steel brackets welded to 1-5/8" O.D. stainless steel tubular standards extending through the backsplash, and fully welded to the table framework.

Provide Klein #481-SH welded sleeves where standards penetrate backsplash.

11. Wall Shelves:
    a. Open wall shelves shall be constructed of #16 gauge stainless steel with back and ends turned up 2", positioned 2" out from face of wall, with all corners welded, and supported on #14 gauge stainless steel brackets.
    b. Brackets shall be flanged inward beneath the shelf and at the wall 1-1/2" with intersecting flanges completely welded, and attached to shelf with studs welded to the underside and bolted with stainless steel lock washers and chrome-plated cap nuts.
    c. Each bracket shall be fastened to the wall with a minimum of two (2) 1/4"-20 stainless steel bolts anchored securely by means of toggles or expansion shields.
12. Sinks:
    a. All sinks shall be the size and shape as shown on drawings, and constructed of #14 gauge stainless steel with backs, bottoms and fronts formed of one continuous sheet and the ends welded in place.
    b. Sinks shall have all corners, both vertical and horizontal, coved on a 3/4" radius electrically welded, ground smooth and polished. Solder in filleted corners will not be acceptable.
    c. Multiple compartment sinks shall be divided with double wall, #14 gauge stainless steel partitions with a 1/2" radius on top and all corners rounded as other corners, continuously welded, ground smooth and polished.
    d. The bottom of each compartment shall be creased to a die stamped recess, tapered and shaped to receive a lever type waste without the use of solder, rivets, or welding.
    e. Provide #14 gauge stainless steel waste lever angle bracket mounted to underside of compartment at front.
    f. The front and exposed ends of sinks shall be fabricated with a 1-1/2", 180 degree rolled edge. The back and ends adjacent to walls or other fixtures shall be turned up with integral coved edge 12" high and returned 2-1/2" at the top on a 45º angle. Cap ends of all exposed splashes.
    g. Unless otherwise specified, two (2) faucet holes on 8" centers shall be provided, located over the centerline of partitions between compartments, 2-1/2" down from splash break.
    h. Gussets for legs shall be fully welded all around to #12 gauge stainless steel triangular plates fully welded to underside of sink.
    i. Sinks fabricated into working surfaces shall be constructed of the same material and in like manner to sinks specified above, except rolled edge and backsplash shall be omitted and the bowl shall be completely welded integral and flush with the working surface. Where basket type wastes are called for, they shall be fitted with removable seats.
    j. Where sink bowls are exposed, the exterior shall also be polished to a #4 finish.
13. Sink Drainboards:
    a. Drainboards shall be constructed of the same material as the sinks and shall be welded integral to same.
    b. The front portion of drainboards shall continue the 1-1/2", 180º rolled edge of sink bowls on a continuous and level horizontal plane.
    c. The surface of the drainboard shall pitch from 2-1/2" at the end furthest from the sink, to 3" at the bowl; or 1/8" per foot. In addition, the bottom surface shall be dished toward the center for complete drainage.
    d. The backsplash of the drainboard shall match the rear of the sink contour and shall be welded integral thereto, running parallel to the floor.
    e. Drainboards shall be reinforced on the underside with a framework of 1"x4"x1" stainless steel channel underbracing placed at each pair of legs, with exposed ends

capped, and one (1) channel running lengthwise.

f. Where disposer cones are fabricated into drainboards, additional 1"x4"x1" stainless steel channels shall be welded into the top framing, spanning the drainboard from front-to-back on both sides of the cone and located not more than 3" to either side.

g. Disposer control panels or switches shall be supported beneath drainboards, when specified, by means of a #12 gauge stainless steel mounting bracket.

14. Dishtable Tops:
    a. Dishtables shall be constructed of #14 gauge stainless steel with all corners, both vertical and horizontal, coved on a 3/4" radius electrically welded, ground smooth and polished. Solder in filleted corners will not be acceptable.
    b. Fronts and exposed ends shall be fabricated with a 3" high, 1-1/2", 180° rolled edge with rounded corners. The back and ends adjacent to walls or other fixtures shall be turned up with integral coved edge 12" high and returned 2-1/2" at the top on a 45º angle. Cap ends of all exposed splashes.
    c. All tops shall slope 1/8" per foot (minimum).
    d. Dishtables shall be reinforced on the underside with a framework of 1"x4"x1" stainless steel channel underbracing placed at each pair of legs, with exposed ends capped, and one (1) channel running lengthwise fully welded between front-to-back channels.
    e. Where tops fit into dishmachines, they shall turn down and into, forming a sealed watertight fit, and attached according to dishmachine manufacturers instructions.
    f. On each side of dishmachine, tables shall be provided with integral splash shields as part of the backsplash.
    g. Silicon filling of gaps caused by poor fit will not be acceptable.
    h. On corner-type door machines, provide #14 gauge stainless steel wall-mounted, splash panel to protect adjacent wall, full width of door opening.
15. Cafeteria Style Counters:
    a. All counters shall be constructed as previously specified under Enclosed Bases.
    b. Provide top and bottom framing for each counter food pan, cold pan, coffee urn, ice cream unit, ice bin, dish dispenser, etc., whether a drop-in unit or a cutout for a portable unit.
    c. Where plate shelves occur, frame horizontally 8-1/2" back from counter edge or as design dictates, and at bottom of shelf at counteredge.
    d. The countertop shall be constructed of #14 gauge stainless steel, as previously specified, with all joints welded, ground and polished.
    e. Fronts and exposed ends shall be stainless steel, plastic laminate or other material as noted in the Item Specifications.
    f. All display glass shelving shall be 1/4" polished plate glass and fully trimmed with #18 gauge stainless steel formed channels. Top shelves shall be the same width as the shelf below. Shelves shall be supported on 5/8" square, #16 gauge stainless steel perimeter tubing fully welded to 1-1/4" square, #16 gauge stainless steel tubing uprights.
    g. Provide appropriate adjustable glass sneeze or breath guards trimmed in stainless steel along front, entire length, mounted in Klein 4465-A brackets.
    h. Protector shelf over hot food wells shall be #16 gauge stainless steel supported on 1-1/4" square, #16 gauge stainless steel tubing uprights, with 1/4" polished plate glass front and end panels trimmed in #18 gauge stainless steel channels. When specified for self-service, mount bottom edge of front panel 8" above countertop.
    i. All display and protector shelves shall be furnished with full-length fluorescent lights wired to on/off switch in counter apron, with lamps and protective shields. Conceal all wiring in tubular uprights.

j. Refer to Item Specification for changes, as required.
k. Counter shall be internally wired complete by the K.E.C., and in such a way as to meet the requirements of the Electrical Code of the job location.

2.04 EQUIPMENT

A. All items listed on the Contract Documents under the heading "Equipment Schedule" shall be furnished in strict accordance with the foregoing specifications and with the following detailed Itemized Specifications.

B. Manufacturer's names and model numbers are shown establishing quality, size, and finish required, representing the Owner's and Consultant's requirements and basis for bid. Equipment is listed hereinafter with same item numbers as shown on Contract Documents.

PART 3 EXECUTION

3.01 INSPECTION

A. Before beginning the installation of foodservice equipment, the spaces and existing conditions shall be examined by the K.E.C. and any deficiencies, discrepancies, or unsatisfactory conditions for proper installation of foodservice equipment shall be reported to the Architect in writing.
   1. Do not proceed with installation until unsatisfactory conditions have been corrected in a manner satisfactory to the installer.
   2. Beginning installation shall constitute acceptance of the area.

3.02 PREPARATION

A. Foodservice equipment drawings are diagrammatic and intended to show layout, arrangement, mechanical and electrical requirements.

B. Field verify all measurements at the building prior to fabrication of custom equipment. Coordinate measurements and dimensions with rough-in and space requirements.

3.03 INSTALLATION

A. The K.E.C. shall coordinate his delivery schedule with the General Contractor to ensure adequate openings in the building to receive the equipment.

B. Equipment shall be un-crated, fully assembled and set level in position for final connections. Parts shipped loose but required for connection shall be properly tagged and shall be accompanied by the necessary installation instructions.

C. Provide a competent, experienced foreman to supervise installation and final connections with other trades.

D. Remote Refrigeration Systems:
   1. All refrigeration work where applicable to this contract shall be accomplished in an approved manner, using finest quality fittings, controls, valves, etc.
   2. Refrigeration items shall be started up, tested, adjusted, and turned over to the Owner in first class condition and left running in accordance with the manufacturer's instructions.
   3. Refrigeration lines and hook-ups shall be completed by the K.E.C. with the exception of electric, water, and drain line final connections unless otherwise specified.
   4. All copper tubing shall be refrigerant grade A.C.R. or type "L".
   5. Silver solder and/or Sil-Fos shall be used for all refrigerant piping. Soft solder is not acceptable.
   6. All refrigerant lines in pipe sleeves or conduit shall be effectively caulked at ends to prevent entrance of water or vermin and at penetrations through walls or floors.
   7. All tubing shall be securely anchored with clamps, and suspended lines shall be supported with adjustable hangers at 6'-0" o.c. maximum.

8. Wrap drain line in freezer compartment(s) with approved heat-tape for final connection by Electrical Contractor.

E. Sealing and Caulking:
1. Prior to the application of sealant, all surfaces shall be thoroughly cleaned and de-greased.
2. Apply around each unit of permanent installation at all intersections with walls, floors, curbs or other permanent items of equipment.
3. Joints shall be air-tight, water-tight, vermin-proof, and sanitary for cleaning purposes.
4. In general, joints shall be not less than 1/8" wide, with backer rod to shape sealant bead properly at 1/4" depth. Shape exposed surfaces of sealant slightly concave, with edges flush with faces of materials at joint.
5. At internal corner joints, apply sealant or gaskets to form a sanitary cove, of not less than 3/8" radius.
6. Provide sealant-filled joints up to 3/4" in joint width. Trim strips for wider joints shall be set in a bed of sealant and attached with stainless steel fasteners, 48" o.c., or less, to insure suitable fastening and prevent buckling of the metals fastened.

F. Cutting:
1. All cutting, fitting, or patching required during installation shall be accomplished by the K.E.C., at his own expense, so as to make the work conform to the plans and specifications.
2. The K.E.C. shall not cut or otherwise alter, except with the consent of the Owner, the work of any other Contractor.
3. Provide cut-outs in foodservice equipment where required to run plumbing, electric, or steam lines through equipment items for final connections.

3.04 FIELD QUALITY CONTROL

A. Inspection:
1. Provide access to shop fabrication areas during normal working hours to facilitate inspection of the equipment, during construction, by the Architect or his authorized representative.
2. Errors found during these inspections shall be corrected to the extent required within the scope of the plans, specifications, and approved drawings.

B. Start-Up and Testing:
1. Delay start-up of foodservice equipment until service lines have been tested, balanced, and adjusted for pressure, voltage, and similar considerations; and until water and steam lines have been cleaned and treated for sanitation.
2. Before testing, lubricate each equipment item in accordance with manufacturer's recommendations.
3. Supply a trained person or persons who shall start up all equipment, test and make adjustments as necessary, resulting in each item of equipment, including controls and safety devices, performing in accordance with the manufacturer's specifications.
4. All gas-fired equipment shall be checked by the local gas company as to calibration, air adjustments, etc., and adjustments made as required.
5. Repair or replace any equipment found to be defective in its operation, including items which are below capacity or operating with excessive noise or vibration.

C. Demonstration:
1. Provide an operating demonstration of all equipment at a time of Owner's convenience, to be held in the presence of authorized representatives of the Architect and Owner.
2. Demonstration shall be performed by manufacturer's representative knowledgeable in all aspects of his equipment.
3. During the demonstration, instruct the Owner's operating personnel in the proper operation

and maintenance of the equipment.

4. Furnish complete, bound, operation/maintenance manuals and certificates of warranty for all items of equipment provided, in accordance with Article 1.5 Submittals, Paragraph F, at this demonstration time.

3.05 ADJUST AND CLEAN

A. Upon completion of installation and tests, clean and sanitize foodservice equipment, and leave in condition ready for use in food service.

B. Remove all protective coverings, and thoroughly clean equipment both internally and externally with stainless steel cleaner.

C. Make and check final adjustments required for proper operation of the equipment.

D. Restore finishes marred during installation to remove abrasions, dents, and other damages. Polish stainless steel surfaces, and touch-up painted surfaces with original paint.

E. Clean up all refuse, rubbish, scrap materials, and debris caused by the work of this Section, and put the site in a neat, orderly, and broom-clean condition.

3.06 ITEMIZED EQUIPMENT

FOOD SCIENCE (1/2)

ITEM #K1: VENTILATOR

QUANTITY:	One (1)
MANUFACTURER:	Captive-Aire Systems, Inc.
MODEL NO.:	8430-NDI-PSP-FB (N058)
PERTINENT DATA:	Island, Back-To-Back Configuration, Captrate Solo Filter, Perforated Ceiling Make-up Air Plenum, With Fire Protection System
UTILITIES REQ'D:	2,600 CFM Exhaust/2,080 CFM Supply (Tempered); 350W, 120V, 1PH (Lights); 20A, 120V, 1PH, 24-Hour Dedicated Service (Fire Protection System)
ALTERNATE MFRS.:	Avtec; Gaylord

Furnish and install per Equipment Plan, Sheet QF-101; Ventilator Detail Drawing, Sheet QF-505; Manufacturer's Instructions and the following:

1. 7'-0" Wide x 6'-6" Long x 2'-6" High with bottom edge mounted at 6'-8" A.F.F. Length comprised of one (1) 6'-6" long section. Entire unit constructed of 18 GA stainless steel with liquid tight all welded external continuous seams and joints per N.F.P.A. 96, U.L. and State of Delaware Codes.

2. Two (2) U.L. Listed, NSF-Approved, 48" long recessed LED light fixtures, equally spaced. Bulbs furnished and installed by K.E.C.

3. Matching stainless steel perimeter closure panels to finished ceiling by K.E.C; verify ceiling height.

4. Surface fire protection system nozzles and piping to be factory installed, chrome plated or stainless steel where exposed, ready for final connections by fire protection system sub-contractor.

5. Hanger rods and support system from structure above by General Contractor. K.E.C. to coordinate method and location with other trades.

6. Stainless steel hanger brackets.

ITEM #K1: (Continued)

7. Full-length, perforated stainless steel ceiling-mounted make-up air plenum with integral supply air balancing dampers for each hood section.

8. Semi-concealed internal sloped grease trough with removable s/s cup at each end.

9. Stainless steel U.L. Classified 20" captrate solo grease filters with hook.

10. 1" integral stand-off @ right end for semi-combustible compliance.

11. Factory System Design Verification (SDV) shall be performed after all inspections are complete. SDV report shall be available once completed.

12. Accessories:
    - -- 12" wide utility cabinet mounted on left end with factory pre-piped Ansul R-102 fire suppression system and electrical pre-wire package #DCV-1111 with light and fan switches.
    - -- One (1) Ansul Model #K01-2 hand-held fire extinguisher, 1.6 gallon, wall-mounted.
    - -- Fire protection system six-month and twelve-month inspections, servicing, and replacement of components as per NFPA-96 Latest Edition.
    - -- Field wrapper.

ITEM #K2: VENTILATOR

QUANTITY:	One (1)
MANUFACTURER:	Captive-Aire Systems, Inc.
MODEL NO.:	5430-ND-2-PSP-F (N058)
PERTINENT DATA:	Wall-Mounted, Captrate Solo Filter, Perforated Ceiling Make-up Air Plenum
UTILITIES REQ'D:	1,138 CFM Exhaust/910 CFM Supply (Tempered); 350W, 120V, 1PH (Lights)
ALTERNATE MFRS.:	Avtec; Gaylord

Furnish and install per Equipment Plan, Sheet QF-101; Ventilator Detail Drawing, Sheet QF-505; Manufacturer's Instructions and the following:

1. 4'-6" Wide x 6'-6" Long x 2'-6" High with bottom edge mounted at 6'-8" A.F.F. Length comprised of one (1) 6'-6" long section. Entire unit constructed of 18 GA stainless steel with liquid tight all welded external continuous seams and joints per N.F.P.A. 96, U.L. and State of Delaware Codes.

2. Two (2) U.L. Listed, NSF-Approved, 12" x 12" recessed LED light fixtures, equally spaced.

3. Matching stainless steel perimeter closure panels to finished ceiling by K.E.C; verify ceiling height.

4. Surface fire protection system nozzles and piping to be factory installed, chrome plated or stainless steel where exposed, ready for final connections by fire protection system sub-contractor.

5. Hanger rods and support system from structure above by General Contractor. K.E.C. to coordinate method and location with other trades.

6. Stainless steel hanger brackets.

ITEM #K2: (Continued)

7. Full-length, perforated stainless steel ceiling-mounted make-up air plenum with integral supply air balancing dampers for each hood section.

8. Semi-concealed internal sloped grease trough with removable s/s cup at each end.

9. Stainless steel U.L. Classified 20" captrate solo grease filters with hook.

10. Integral 3" wide stand-off @ rear of hood body with closed ends for semi-combustible compliance.

11. Factory System Design Verification (SDV) shall be performed after all inspections are complete. SDV report shall be available once completed.

12. Accessories:
    -- #18GA stainless steel wall flashing from bottom edge of hood to top of finish floor base. Extend full-length of hood body. Attach to wall with non-exposed fasteners.
    -- Field wrapper.

CULINARY KITCHEN 3/4

ITEM #C1: MIXER, 20-QUART

QUANTITY: One (1)
MANUFACTURER: Hobart Corporation
MODEL NO.: HL200-1STD (N058)
PERTINENT DATA: Bench Model, Standard Finish with Timer, Legacy Series
UTILITIES REQ'D: 1/2 HP, 120V, 1PH
ALTERNATE MFRS.: None

Furnish and set-in-place per Equipment Plan, Sheet QF-111; Manufacturer's Instructions and the following:

1. Pre-configured 120V/1PH mixer with standard accessory package consisting of: 20-qt. stainless steel bowl, 20-qt. aluminum “B” beater and 20-qt. stainless steel “D” wire whip.

2. Accessories:
    -- One (1) #EDDOUGH-ALU20H “ED” Dough Hook.
    -- One (1) #SPLASH-LEX020 lexan splash cover.
    -- One (1) Piper Products #MX-29-TSS stainless steel mixer stand with heavy-duty swivel casters with polyurethane tires.

3. Cord and plug set.

ITEM #C2: INGREDIENT BIN, MOBILE

QUANTITY: Three (3)
MANUFACTURER: Piper Products, Inc.
MODEL NO.: 47-75 (N058)
PERTINENT DATA: 75 - Lb Capacity, Stainless Steel Construction, Sliding Lid
UTILITIES REQ'D: ----
ALTERNATE MFR.: None

Furnish and set-in-place per Equipment Plan, Sheet QF-111 and Manufacturer's Instructions.

ITEM # C3: BAKER'S TABLE

QUANTITY: One (1)
MANUFACTURER: Custom Fabricated
MODEL NO.: #14 GA Stainless Steel
PERTINENT DATA: 7'-0" Long x 2'-6" Wide x 3'-0" High
UTILITIES REQ'D: 1/2" HW, 1/2" CW, 1-1/2" IW
ALTERNATE MFRS.: None

Fabricate and set-in-place per Equipment Plan, Sheet QF-111; Fabrication Detail, Sheet QF-501; and the following:

1. Front and end edge roll per Detail 1.02M.

2. 6" high backsplash per Detail 1.04A.

3. Framework per Detail 1.05.

4. Legs per Detail 1.07.

5. Crossbracing per Detail 1.10.

6. Worktable per Detail 2.01.

7. 18" x 18 " x 10" deep utility sink per Detail 3.04 with stainless steel waste lever angle bracket fully welded to underside of sink.

8. Extend left rear leg up through tabletop to form utensil tree. Attach five (5) 1/2" dia. x 6" long welded stainless steel rods staggered 6" o.c. @ 45° angle.

9. Sound-deaden underside of tabletop and sink with NSF-approved sound dampening material.

10. Accessories:
    -- One (1) T&S #B-321 deck-mounted swivel gooseneck faucet with #B-199-2 aerator.
    -- One (1) T&S #B-3950-01 twist waste valve with overflow assembly and #010387-45 basket strainer.

ITEM #C4: HAND SINK

QUANTITY: Four (4)
MANUFACTURER: Eagle Foodservice Equipment Company
MODEL NO.: HSA-10-FAW-LRS (N058)
PERTINENT DATA: Wall Mounted, Wrist Action Faucet
UTILITIES REQ'D: 1/2" HW, 1/2" CW, 1-1/2" W
ALTERNATE MFRS.: Advance/Tabco

Furnish and set-in-place per Equipment Plan, Sheet QF-111; Manufacturer's Instructions and the following:

1. Complete sink assembly consisting of: gooseneck faucet, p-trap, tailpiece and basket drain.

2. Accessories:
   -- #606215 skirt assembly, each unit.
   -- Integral right and left stainless steel splash shield, each unit.

ITEM #C5: SOAP & TOWEL DISPENSER -- (N.I.K.E.C. – SPECIFIED BY ARCHITECT)

QUANTITY: Five (5)

ITEM #C6: UTILITY CART, MOBILE

QUANTITY: Two (2)
MANUFACTURER: Lakeside Manufacturing Company, Inc.
MODEL NO.: 544 (N058)
PERTINENT DATA: 700-LB. Capacity, Three-Shelf, NSF Model
UTILITIES REQ'D.: ----
ALTERNATE MFRS.: None

Furnish and set-in-place per Equipment Plan, Sheet QF-111; Manufacturer's Instructions and the following:

1. All four (4) casters swivel-type.

ITEM #C7: WALK-IN COOLER/FREEZER

QUANTITY: One (1)
MANUFACTURER: Thermo-Kool
MODEL NO.: Indoor Installation (N058)
PERTINENT DATA: 4" Thick Durathane Construction - Class I; NSF Construction
UTILITIES REQ'D: 1750W, 120V, 1PH; (2) 1/2" IW
ALTERNATE MFRS.: Master-Bilt; ThermalRite

Furnish and set-in-place per Equipment Plan, Sheet QF-111; Building Conditions Plan, Sheet QF-112; Manufacturer's Shop Drawing and the following:

ITEM #C7: (Continued)

1. Two Section Unit: 23'-1" L x 7'-9" W x 8'-6" H. Size width of interior compartments equally.

2. Exterior Finish:
   -- 26 GA stucco embossed galvanized steel where unexposed.
   -- 20 GA stucco embossed stainless steel where exposed.

3. Interior Finish:
   -- White acrylic enamel baked-on .040 stucco embossed aluminum walls.
   -- White acrylic enamel baked on 26 GA smooth galvanized steel ceiling.

4. Interior Floor:
   -- 4" prefabricated floor panels installed in 6" deep floor recess over hot asphalt paper or 6 MIL polyethylene sheets on building floor slab per Detail, Sheet QF-112.
   -- 2" setting bed with two (2) layers of wire reinforcing mesh fabric and quarry tile floor material with 6" high integral coved base, both interior and exterior of box, installed over prefabricated floor panel by Flooring Contractor.

5. Entrance Door:
   -- Two (2) flush-mounted, self-closing doors with 34" x 76" net opening, hinged per Equipment Plan.
   -- Polished chrome camlift hinges with lift-off capability. One (1) extra hinge per door, three (3) total.
   -- Kason #1236 polished chrome lever-action handle with knob-turn release and cylinder lock.
   -- Kason #09440004 polished chrome mortise dead-bolt lock, factory mounted.
   -- Hydraulic door closer.
   -- Standard 2" diameter dial indicating thermometer factory mounted, each compartment.
   -- Pilot light and switch assembly factory mounted in door frame with stainless steel coverplate.
   -- 36" high aluminum diamond tread kickplates, interior and exterior of door, frame and jamb.
   -- 14" x 24" heated observation windows, both compartments.
   -- Undercut doors for quarry tile floor.
   -- Foot treadle door opener.
   -- Kason #1806 LED light fixture with high-impact plastic cover centered over door opening to avoid conflict with shelving, each compartment. Extend wiring in conduit, foamed within door panel header, to junction box mounted on top of walk-in ceiling, each compartment.
   -- Kason #907 interior door handle, factory mounted, with concealed metal backing plate.
   -- Round vinyl door bumper mounted to front exterior face to protect handle from puncturing wall when door in full open position.
   -- Engraved phenolic plastic compartment sign - 12" long x 2" high; white in color with 1" high blue CAPITAL letters mounted on each door above observation window; (1) - COOLER, (1) - FREEZER.
   -- 12-gauge heavy-duty tainless steel heated threshold, each compartment.
   -- Reinforced door panels for air-screen door.

6. Heated pressure relief port in freezer, ceiling mounted.

7. Six (6) Kason #1810L21248LB 48" long twin-tube LED light fixtures with shatter-proof high impact plastic covers centrally-mounted to walk-in ceiling per Detail, Sheet QF-114; three (3) for the cooler, three (3) for the freezer. Fixtures to be shipped loose and mounted by K.E.C. Final connection by Electrical Contractor.

ITEM #C7: (Continued)

8. Modularm Model #75LC recessed flush-mount digital thermometer with audio-visual temperature alarm factory mounted in door frames for both cooler and freezer compartments inter-wired with building monitoring system by Electrical Contractor, as required. Extend temperature probe to rear wall of each compartment.

9. Provide and install trim strips of matching exterior finish between ends of walk-in panels and building walls from finish floor to 6" above finish ceiling; verify finished ceiling height.

10. Provide and install closure panels of matching exterior finish between top of walk-in and finish ceiling per Detail Sheet QF-112; K.E.C. to verify finished ceiling height.

11. All electrical conduit shall be run concealed above walk-in ceiling, per Detail Sheet QF-114.

12. Evaporator coil drain lines shall be run to floor drain with "P"-trap on exterior of box by K.E.C. Pitch drain lines 1" per foot of horizontal run.

13. Black flexible "Armaflex" insulation applied to exposed drain lines and fittings within interior of box by K.E.C.

14. Spiral heat tape applied to drain line within interior of freezer compartment prior to application of insulation by K.E.C. Drain line heating cable shall be installed for continuous 24-hour operation.

15. Coordinate location of sprinkler head drops and provide penetrations, where necessary.

16. Seal and insulate all openings to prevent infiltration of warm air into cooler/freezer compartments.

17. Accessories:
    - -- Two (2) Mars Air LoPro #LPN36-IU air door curtains with optional on/off microswitch. Electrical Contractor to provide power receptacle and final connection. Center fan over each entrance door opening and attach to wall panel with thru-bolts.
    - -- #16 ga. stainless steel hat-channel bumper rail with closed ends installed to front face of walk-in, full-length, mounted @ 36" A.F.F. Provide 1/8" diamond tread kickplates from top of finish floor coved base to bottom of bumper rail. Align bumper rail with 36" high aluminum kickplate on doors.

18. Quality Inspection Requirement:
    - -- Walk-In shall be completely erected at the manufacturer’s facility prior to shipment and a quality control inspection performed on the assembled structure. A digital photograph of factory assembled walk-in shall be provided for the K.E.C. permanent records and included in the operation and maintenance manuals.

ITEM #C8: REFRIGERATION SYSTEM

QUANTITY:	One (1)
MANUFACTURER:	ColdZone
MODEL NO.:	MPL-2CZ (N058)
PERTINENT DATA:	Mini-Pak, Air-Cooled, Outdoor Installation, With Surveillant Demand Defrost Evaporator Control
UTILITIES REQ'D:	25.6A, 208V, 3PH
ALTERNATE MFR.:	RDT; Omni-Temp

Furnish and install per Equipment Plan, Sheet QF-111; Building Conditions Plan, Sheet QF-112; Manufacturer's Shop Drawing and the following:

1. One (1) pre-engineered system including condensing units, evaporator coils, and all required piping, valves and accessories.

2. Air-cooled system designed for year-round outdoor operation in Appoquinimink County, State of Delaware.

3. System located outdoors on roof. Curb with pitch-pocket furnished and installed by Contractor. Refer to Mechanical Roof Plan for exact location.

4. Overall size: 72" long x 36" wide x 37" high weighing 584 lbs. with installation clearance of 3'-0" on all sides.

5. The system shall be housed in a single, compact rust-proof cabinet and utilize a multi-circuited air-cooled condenser design. Side panels and base shall be comprised of 18 and 14 gauge all welded steel, respectively, with 16 gauge top. Entire frame shall be pre-assembled, fully welded, cleaned structural steel painted with a prime coat of zinc chromate and shall be finished with two (2) coats of Baja Beige and one (1) coat of clear epoxy-based "Enviro-Kote."

6. Hot air discharge from condenser fans shall be vertical. Fan motors shall be not less than 1/2 HP with a venturi-contoured air scoop furnished for each fan to reduce air turbulence and fan loading. Fans shall be equipped with thermal sensing controls mounted inside the control panel designed to operate the minimum number of fans required for adequate air flow under varying ambient conditions. Fan blades shall be not less than 20" in diameter and protected with a plastic coated fan guard.

7. Unit shall be provided with scroll compressors; Copeland 3.5 HP Model #ZF11K4E for the Freezer; Copeland 1.3 HP Model #ZS09KAE for the Cooler. Each unit shall be equipped with hi-low pressure control, liquid line dryer, sight glass, suction and discharge vibration eliminators, head pressure control, and crankcase heaters, all factory assembled.

8. All compressor units shall be new and factory assembled to operate with CFC-free refrigerants. Refrigerant R-407A shall be used for medium and low-temperature application.

9. Each compressor shall be equipped with an oversized receiver. Such receivers shall be equipped individually with a fusible plug, as well as installed king and queen valves equipped with service ports. Each receiver shall have a pump down capacity large enough to accept the total liquid volume of refrigerant in the system without exceeding 80% of the volumetric capacity at the designed operating pressure and temperature.

ITEM #C8: (Continued)

10. Unit shall be provided with a 15º TD air-cooled condenser coil with staggered tube design for greater thermal efficiency. The coil shall be tested to 400 PSI and shall be self-draining to assure efficient operation and proper oil return. The condenser fan motor shall be inherently protected and have life-lubricated bearings. A fan guard shall be provided with each motor. Liquid receiver shall conform to UL or ASME codes and bear the appropriate label or stamp.

11. All refrigerant lines shall be extended to one side of the package in a neat and orderly manner for connection to refrigerant lines penetrating thru building exterior wall.

12. All tubing shall be securely supported and anchored with clamps.

13. All copper tubing to be refrigerant grade A.C.R. or type L.

14. Silver solder and/or Sil-fos shall be used for all refrigerant piping. Soft solder is not acceptable.

15. All piping to be pressure tested with nitrogen at 300 psi. After the condensing unit and coil have been connected, balance of the system shall be leak-tested with valves open.

16. The package system shall have a factory mounted and pre-wired control panel complete with main fused disconnect, compressor circuit breakers, contactors, and time clocks wired for single power connection.

17. Electrical Contractor shall provide and install power lines to the control panel, and provide wiring for control and defrost heater between the defrost clock and the refrigeration fixtures, all in accordance with the wiring diagram and local codes.

18. The complete system shall be evacuated with a vacuum pump.

19. K.E.C. to charge, test, and adjust each unit to be in an operational system.

20. Refrigeration Contractor and/or K.E.C. to provide and install drain line heater in freezer to be connected by Electrical Contractor.

21. Evaporator Coil with High-Efficiency EC Motors -- Walk-In Freezer: Low Profile, End-Mount Type, Model CL6E090DDAB, 1.0A, 208V, 1PH(Fan); 9.8A, 208V, 1PH (Defrost Heater)
    - System to operate at -10º F.
    - Furnished complete with factory installed thermostat, solenoid and expansion valves ready for final connection by Refrigeration Contractor.
    - Surveillant Evaporator Controller to consist of a microprocessor driven controller that reduces the energy used by the evaporator coil in refrigerations systems through precise control of superheat, fan management and demand defrosts.
    - Furnish Cat5 cable and interwire to building monitoring system by Electrical Contractor.

22. Evaporator Coil with High-Efficiency EC Motors -- Walk-In Cooler: Low Profile, End-Mount Type, Model CL6A094ADAB, 1.6A, 120V, 1PH
    - System to operate at +35º F.
    - Furnished complete with factory installed thermostat, solenoid and expansion valves ready for final connection by Refrigeration Contractor.

ITEM #C8: (Continued)

-- Surveillant Evaporator Controller to consist of a microprocessor driven controller that reduces the energy used by the evaporator coil in refrigerations systems through precise control of superheat, fan management and demand defrosts.
-- Furnish Cat5 cable and interwire to building monitoring system by Electrical Contractor.

23. Systems marked in sequence shall be a factory package refrigeration system UL approved.

24. Factory installed main-fused disconnect switch.

25. K.E.C. shall guarantee all items in the Packaged Refrigeration System against defects, including all parts and labor for two (2) years. The guarantee is to commence on the day installation is made operational. All repairs and replacements necessary during this period shall be affected at the K.E.C.'s expense on a 24-hour, 7-day a week basis, including emergency service. An emergency service telephone number shall be conspicuously posted.

26. During the 2-year period, it shall be the K.E.C.'s responsibility to provide all necessary preventive maintenance to protect the interest of all concerned. This shall embrace all components and the performance of the system including coils, valves, controls, etc. furnished with the refrigeration equipment.

27. K.E.C. shall provide a 5-year extended factory warranty on all compressors.

28. K.E.C. shall provide any required instruction to Plumbing and/or Electrical Contractors for services or related work.

29. K.E.C. shall provide, for record and reference, as-built diagram of piping systems showing actual locations, components, system identification, and refrigerated equipment on each system. As-built diagram shall be provided in laminated plastic form and shall be conspicuously located in the Engineer's Office. Actual refrigeration system components shall be tagged in a permanent manner to match the as-built diagram.

30. Installation drawings and manufacturer's specification sheets shall be submitted to the architect/owner for approval prior to commencing work. Drawings shall include refrigeration piping showing actual line sizes and system allocation, evaporators, compressors, condensers, and all required valves and accessories. Local fire code may require that fiberglass insulation be provided. Such insulation procedure shall be by the General Contractor.

31. K.E.C. shall provide specifications for the preparation of joinings, connections, and materials to be used to the General Contractor.

32. K.E.C. shall provide testing and charging of the entire system for the Foodservice General Specifications, Electrical and Mechanical Requirements.

33. Commissioning services shall be performed by factory authorized representative. Report to be provided to the Consultant once completed.

ITEM #C9: SHELVING, MOBILE

QUANTITY: Five (5)
MANUFACTURER: InterMetro Industries Corporation
MODEL NO.: MetroMaxQ (N058)
PERTINENT DATA: Five-Tier High, Free-Standing, Polymer
UTILITIES REQ'D: ----
ALTERNATE MFRS.: None

Furnish and set-in-place per Equipment Plan, Sheet QF-111; Manufacturer's Instructions and the following:

Dry Storage:

1. Two (2) #MQ2442G sections; 24" W x 42" L x 5-tier high.

2. Three (3) #MQ2448G sections; 24" W x 48" L x 5-tier high.

3. Twenty (20) #MQ74UPE posts for stem casters, 74-5/8" high.

4. Ten (10) #5MPX polyurethane swivel casters with bumpers.

5. Ten (10) #5MPBX polyurethane swivel casters with brakes and bumpers.

6. Plastic wedge lock connectors, quantity as required.

7. Locate bottom shelf @ 12" A.F.F.; space remaining shelves equally.

ITEM #C10: DUNNAGE RACK, MOBILE

QUANTITY: Two (2)
MANUFACTURER: InterMetro Industries Corporation
MODEL NO.: MetroMax i (N058)
PERTINENT DATA: Open-Grid Shelf Mat, Heavy-Duty, Metroseal 3™ Epoxy-Coated
UTILITIES REQ'D: ----
ALTERNATE MFRS.: None

Furnish and set-in-place per Equipment Plan, Sheet QF-111; Manufacturer's Instructions and the following:

Cooler:

1. One (1) #MHP33K3 unit; 18" W x 36" L.

Freezer:

1. One (1) #MHP33K3 unit; 18" W x 36" L.

ITEM #C11: SHELVING, MOBILE

QUANTITY: Ten (10)
MANUFACTURER: InterMetro Industries Corporation
MODEL NO.: MetroMaxQ (N058)
PERTINENT DATA: Four-Tier High, Adjustable Open-Grid Shelf Mat, Polymer
UTILITIES REQ'D: ----
ALTERNATE MFRS.: None

Furnish and set-in-place per Equipment Plan, Sheet QF-111; Manufacturer's Instructions and the following:

Cooler:

1. One (1) #MQ1836G section; 18" W x 36" L x 4-tier high.

2. Three (3) #MQ1842G sections; 18" W x 42" L x 4-tier high.

3. One (1) #MQ1854G section; 18" W x 54" L x 4-tier high.

3. Twenty (20) #MQ63UPE posts for stem casters, 63" high.

4. Ten (10) #5MPX polyurethane swivel casters with bumpers.

5. Ten (10) #5MPBX polyurethane swivel casters with brakes and bumpers.

6. Plastic wedge lock connectors, quantity as required.

7. Locate bottom shelf @ 12" A.F.F.; space remaining shelves equally.

Freezer:

1. One (1) #MQ1836G section; 18" W x 36" L x 4-tier high.

2. Three (3) #MQ1842G sections; 18" W x 42" L x 4-tier high.

3. One (1) #MQ1854G section; 18" W x 54" L x 4-tier high.

3. Twenty (20) #MQ63UPE posts for stem casters, 63" high.

4. Ten (10) #5MPX polyurethane swivel casters with bumpers.

5. Ten (10) #5MPBX polyurethane swivel casters with brakes and bumpers.

6. Plastic wedge lock connectors, quantity as required.

7. Locate bottom shelf @ 12" A.F.F.; space remaining shelves equally.

ITEM #C12: COMBI OVEN

QUANTITY: One (1)
MANUFACTURER: Rational Cooking Systems, Inc.
MODEL NO.: SCC-62E (N058)
PERTINENT DATA: Full Size, Self-Contained, SelfCooking Center® with Care Control
UTILITIES REQ'D: 31.5A, 480V, 3PH, 3/4" CW, 2" IW
ALTERNATE MFRS.: None

Furnish and set-in-place per Equipment Plan, Sheet QF-111; Manufacturer's Instructions and the following:

1. Accessories:
   -- Six (6) #6019.1150 stainless steel 12" x 20" fry baskets.
   -- Three (3) #6010.2101 stainless steel 24" x 20" wire racks.
   -- One (1) Everpure #EV9797-21 KleenSteam II Water Filter. Ship to Utility Raceway manufacturer for factory installation.
   -- Rational Certified Installation.
   -- Installation kit.
   -- Chef Assistance Program.
   -- One (1) bucket #56.00.210 cleaner tablets.
   -- One (1) bucket #56.00.562 care tablets.

2. Extended warranty protection covered through KleenSteam Filtration System.

3. Electrical and mechanical services provided thru Utility Raceway, Item #C16.

ITEM #C13: CONVECTION OVEN, MOBILE

QUANTITY: One (1)
MANUFACTURER: Blodgett Oven Company, Inc.
MODEL NO.: DFG-200-ES-DBL (N058)
PERTINENT DATA: Full Size Gas, Deep-Depth, Double Deck
UTILITIES REQ'D: (2)8.0A, 120V, 1PH; 3/4" Natural Gas @ 100 MBH
ALTERNATE MFRS: Garland Commercial Ranges, Ltd.

Furnish and set-in-place per Equipment Plan, Sheet QF-111, Manufacturer's Instructions and the following:

1. Natural gas fired, pressure regulator as required. Manifold rear gas connection of each oven compartment for single connection point ready for quick disconnect assembly.

2. Stainless steel front, sides, top and back panels.

3. Standard compliment of wire racks, five (5) per section.

4. Doors with dual pane thermal windows and interior light package.

5. Two-speed motors.

ITEM #C13: (Continued)

6. 5" diameter heavy-duty polyurethane swivel casters, front two (2) with brakes.

7. Cord and plug sets.

8. Mechanical and electrical services supplied through Utility Raceway, Item #C16.

ITEM #C14: BLAST CHILLER/SHOCK FREEZER

QUANTITY: One (1)
MANUFACTURER: Irinox
MODEL NO.: MF 30.2 (N058)
PERTINENT DATA: One-Section, Self-Contained, Stainless Steel Interior/Exterior, (8)-Half-Size Sheet Pans or (4)-Full Size Sheet Pans Capacity
UTILITIES REQ'D: 11.7A, 208V, 1PH
ALTERNATE MFRS.: None

Furnish and set-in-place per Equipment Plan, Sheet QF-111; Manufacturer's Instructions and the following:

1. Accessories:
   -- Door hinged right.
   -- Custom stainless steel stand to mount Item #12: Combi Oven over this unit 37" D x 38 ¼" W x 39 ½" H

2. Electrical service supplied through Utility Raceway, Item #C16.

ITEM #C15: TRUNNION KETTLE, 6-GALLON

QUANTITY: One (1)
MANUFACTURER: Cleveland Range, Inc.
MODEL NO.: KET-6-T (N058)
PERTINENT DATA: Table Top, Self-Contained, 2/3-Jacketed
UTILITIES REQ'D: 8.2KW, 480V, 3PH; ½" HW, ½" CW, 1-¼" IW
ALTERNATE MFRS.: None

Furnish and set-in-place per Equipment Plan, Sheet QF-111; Manufacturer's Instructions and the following:

1. Accessories:
   -- One (1) #CL6 lift-off cover.
   -- One (1) #DPKT double-pantry faucet with swing spout and bracket.
   -- One (1) #EST28 stainless steel equipment stand.
   -- One (1) #MS6 measuring strip.
   -- #VOK2 480-volt, 3-phase.
   -- One (1) #KAK complete kettle accessory kit.
   -- One (1) #FS6 food strainer.
   -- #316G1 316 stainless steel liner.

ITEM #C15: (Continued)

2. Mechanical and electrical services supplied through Utility Raceway, Item #C16.

ITEM #C16: UTILITY RACEWAY

QUANTITY:	One (1)
MANUFACTURER:	Captive-Aire
MODEL NO.:	UDW (N058)
PERTINENT DATA:	Wall Mounted
UTILITIES REQ'D:	50.0A, 120/208V, 3PH; 100.0A, 480V, 3PH; 3/4" HW, 3/4" CW; 1-1/2" Natural Gas @ 790 MBH
ALTERNATE MFRS.:	Avtec; Gaylord

Furnish and install per Equipment Plan, Sheet QF-111; Raceway Detail Drawing, Sheet QF-503; Manufacturer's Shop Drawing and the following:

1. All components and labor necessary for a complete system manufactured in accordance with NEC latest edition, NEMA, NFPA No. 54, Uniform Plumbing Code, ASME, OSHA using only U.L. Listed certified components.

2. 15'-0" long x 8" wide x 6'-8" high with risers, completely pre-wired and pre-plumbed to one (1) final connection point for electric, hot water, cold water and gas.

3. System shall extend up to bottom edge of Ventilator, Item #C17. All connections shall face down on horizontal member.

4. 54" W. x 6'-8" H. risers on each end with 2" penetration into ventilator at 6'-8" A.F.F.

5. 5'-2" overall height less risers with peaked top.

6. Riser, top, endcaps and raceway exterior panels shall be constructed of No. 16 gauge No. 304 stainless steel with a No. 4 mill finish. Removable panels shall be constructed of No. 18 gauge stainless steel.

7. Removable link plates constructed of No. 16 gauge stainless steel.

8. Electrical compartment shall be completely enclosed with stainless steel housing accessible by the removal of link plates. Internal electrical feeder shall be conductor cable wireway having balanced load and phases and with connection lugs for main service. Branch circuit wiring for each electrical connection shall be phase identified and sized in accordance with circuit breaker rated capacity. Raceway shall provide electrical, water and gas service for items #C12, #C13, #C14 and #C15.

9. Provide 12" long interchangeable 16 gauge stainless steel link connection plate for each electrical connection equipped with individual circuit breaker(s) installed in breaker panel mounted in left-hand riser, and grounding type receptacle with twist-lock feature or pre-wired flexible sealtite conduit.

10. On each connection plate provide U.L. listed GFIC ground fault interrupter circuits and matching power supply cords on each 120-volt single phase connection.

ITEM #C16: (Continued)

11. Hot water and cold water plumbing compartment shall be isolated from electrical compartment. All piping and disconnects in system shall be color coded.

12. All hot and cold water piping, including individual branch pipe connection, shall be hard temper type "L" copper tubing with copper sweat type solder fittings. At each individual connection, provide A.G.A approved flexible hose(s) with two-wall brass and stainless steel construction with quick-disconnect fittings.

13. At each individual gas branch connection, provide 1/4-turn ball valve and 48" long Dormont PVC coated AGA and NSF approved flexible hose with SnapFast quick-disconnect device and double SwivelMAX gas connectors.

14. Provide each mobile piece of equipment with an A.G.A. recognized restraining device protecting respective gas disconnect assemblies and connectors.

15. Provide fire/fuel shut-off for electric and gas equipment per NFPA No. 96. System shall require one final connection by Electrical Contractor from fire protection system. Provide manual gas reset station with audio and visual alarms.

16. Electronic gas solenoid valve factory installed at each in-coming gas service ready for final connection per local codes by Plumbing Contractor; inter-wired by Electrical Contractor.

17. Provide matching cord sets for all electric equipment, five (5) total.

18. Neoprene bumper strips, full-length.

19. System fabricated in four (4) sections, assembled in field to present integral, one-piece, appearance.

20. Provide shunt-type circuit breaker main electrical disconnect mounted in right-hand riser for 50A, 120/208V, 3PH and 100A, 480V, 3PH services.

21. Factory System Design Verification (SDV) shall be performed after all inspections are complete. SDV report shall be available once completed.

22. Raceway shall be of same manufacturer as Ventilator, Item #C17.

23. U.L. listed, solid-state control panel mounted in right-hand riser end, with the following integral accessories:
    - -- Ventilator start/stop station with adjustable time-delay to exhaust residual heat.
    - -- Ventilator light switch, pre-wired in 10ft. flexible conduit ready for connection to light

24. Accessories;
    - -- One (1) Everpure #EV9797-21 KleenSteam II water filter system factory-installed and housed within left-hand riser. Provide one (1) independent pre-piped water line to service point for Item #C12: Combi-Oven. Fabricate 18"x18" lexan viewport in riser panel to monitor pressure gauge and filter bowl.
    - -- Watts #LF7R dual check valve for each water drop.

ITEM #C17: VENTILATOR

QUANTITY:	One (1)
MANUFACTURER:	Captive-Aire
MODEL NO.:	6630-ND2-PSP-F (N058)
PERTINENT DATA:	Wall Mounted, With Fire Protection System
UTILITIES REQ'D:	2,450 CFM Exhaust/ 2,009 CFM Supply; 350W, 120V, 1PH (Lights); 20A, 120V, 1PH, 24-Hour Dedicated Service (Fire Protection System)
ALTERNATE MFRS.:	None

Furnish and install per Equipment Plan, Sheet QF-111; Ventilator Detail Drawing, Sheet QF-506; Manufacturer's Shop Drawing and the following:

1. 5'-6" Wide x 14'-0" Long x 2'-6" High, with bottom edge mounted at 6'-8" A.F.F. Length comprised of one (1) 14'-0" long section. Entire unit constructed of 18 GA - 304 stainless steel #4 mill finish with liquid tight all welded external continuous seams and joints per N.F.P.A. 96, U.L. and State of Delaware Codes.

2. Four (4) U.L. Listed, NSF-Approved, 12" x 12" long recessed LED light fixtures equally spaced, pre-wired to common junction box.

3. Matching stainless steel perimeter closure panels to finished ceiling; K.E.C. to verify ceiling height.

4. Surface fire protection system nozzles and piping to be installed at manufacturer's factory at time of fabrication. All exposed pipe and fittings shall be chrome-plate or stainless steel.

5. Hanger rods and support system from structure above by General Contractor. K.E.C. to coordinate method and location with other trades.

6. Stainless steel hanger brackets.

7. Integral 8" wide space at rear of ventilator to accommodate Utility Raceway, Item #C16.

8. Stainless steel U.L. Classified 20" captrate solo grease filters with hook.

9. Semi-concealed stainless steel grease trough sloped to removable grease cups.

10. HVAC Contractor to provide tempered supply air during winter months: 60º F - 65º F.

11. Factory System Design Verification (SDV) shall be performed after all inspections are complete. SDV report shall be available once completed.

12. Ventilator shall be of same manufacturer as Utility Raceway, Item #C16.

13. Accessories:
    - -- 12" wide utility cabinet mounted on right end with factory pre-piped Ansul R-102 fire suppression system and electrical pre-wire package #DCV-1111 with light and fan switches.
    - -- One (1) Ansul Model K01-2 hand-held fire extinguisher, 1.6 gallon, wall-mounted.
    - -- Six-month and twelve-month inspections, servicing, and replacement of components as per NFPA-96 Latest Edition.

ITEM #C18: SLICER

QUANTITY: One (1)
MANUFACTURER: Hobart Corporation
MODEL NO.: HS7-1 (N058)
PERTINENT DATA: Automatic 4- Speed Carriage Drive, 13" Diameter Blade
UTILITIES REQ'D: 1/2 HP, 120V, 1PH
ALTERNATE MFRS.: Bizerba

Furnish and set-in-place per Equipment Plan, Sheet QF-111; Manufacturer's Instructions and the following:

1. Accessories:
   -- #HS-FENFUL product fence.
   -- #HS-CHUTE tubular chutes with plunger.
   -- #HS-LEGSET 4½" legs.

2. Cord and plug set.

ITEM #C19: TV MONITOR -- (N.I.C. – FURNISHED BY OWNER)

QUANTITY: One (1)

ITEM #C20: WORKTABLE

QUANTITY: One (1)
MANUFACTURER: Custom Fabricated
MODEL NO.: #14 GA Stainless Steel
PERTINENT DATA: 5'-0" Long x 2'-6" Wide x 3'-0" High
UTILITIES REQ'D: 1/2" HW, 1/2" CW, 1-1/2" IW
ALTERNATE MFRS.: None

Fabricate and set-in-place per Equipment Plan, Sheet QF-111; Fabrication Detail, Sheet QF-502 and the following:

1. Front and end edge roll per Detail 1.02M.

2. 6" high back, right and partial left end splash per Detail 1.04A.

3. Framework per Detail 1.05.

4. Legs per Detail 1.07.

5. Stainless steel undershelf per Detail 1.11.

6. One (1) stainless steel drawer assembly per Detail 1.14, Type I, with lock.

7. Worktable per Detail 2.01.

ITEM #C20: (Continued)

8. Sound-deaden underside of tabletop with NSF-approved sound dampening material.

ITEM #C21: RETRACTABLE CORD REEL

QUANTITY: Six (6)
MANUFACTURER: APC Group Inc.
MODEL NO.: Kitchen Leash (N058)
PERTINENT DATA: Ceiling-Mounted, With Adjustable Stop, Non-GFI Receptacle
UTILITIES REQ'D: 20.0A, 120V, 1PH
ALTERNATE MFRS.: None

Furnish and install per Equipment Plan, Sheet QF-111; Manufacturer's Instructions and the following:

1. Electrical Contractor to furnish and install GFCI type breaker at kitchen electrical panel board.

ITEM #C22: WORKTABLE, MOBILE

QUANTITY: Six (6)
MANUFACTURER: Custom Fabricated
MODEL NO.: #14 GA Stainless Steel
PERTINENT DATA: 8'-0" Long x 2'-6" Wide x 3'-0" High
UTILITIES REQ'D: ----
ALTERNATE MFRS.: None

Fabricate and set-in-place per Equipment Plan, Sheet QF-111; Fabrication Detail, Sheet QF-502; and the following:

1. Perimeter edge rolls per Detail 1.02.1M.

2. Framework per Detail 1.05.

3. Legs per Detail 1.07.

4. Crossbracing per Detail 1.10.

5. Stainless steel undershelf per Detail 1.11.

6. One (1) stainless steel drawer assembly per Detail 1.14, Type I with lock.

7. Worktable per Detail 2.01.

8. 5" diameter heavy-duty polyurethane swivel casters, four (4) with brakes.

9. Sound-deaden underside of tabletop with NSF-approved sound dampening material.

10. Furnish one (1) 34" high unit for ADA compliance.

ITEM #C22: (Continued)

11. Furnish one (1) 36" high unit with flanged feet and one (1) Eagle #HWB-T drop-in hand sink with soap and towel dispenser. Provide sink with undercounter stainless steel skirting on all three (3) sides.

12. Accessories:
    -- One (1) Edlund #KLC994 knife cabinet with keyed locking handle and stainless steel mounting bracket, each table.

ITEM #C23: SLICER STAND, MOBILE

QUANTITY: One (1)
MANUFACTURER: Precision Industries, Inc.
MODEL NO.: LTM-2736-ME-MOD (N058)
PERTINENT DATA: Stainless Steel, Auto-Lift Table, 500-Lb. Capacity
UTILITIES REQ'D: ----
ALTERNATE MFRS: None

Furnish and set-in-place per Equipment Plan, Sheet QF-111, Manufacturer's Instructions and the following:

1. Modified table dimensions of 30-1/2" L x 30-1/2" W x 30" A.F.F. working height.

2. Polyurethane casters, front two (2) with brakes.

ITEM #C24: PREP SINK

QUANTITY: Two (2)
MANUFACTURER: Custom Fabricated
MODEL NO: #14 GA Stainless Steel
PERTINENT DATA: 5'-9" Long x 2'-6" Wide x 2'-10" High
UTILITIES REQ'D: 1/2" HW, 1/2" CW, (2) 1-1/2" IW
ALTERNATE MFRS.: None

Fabricate and set-in-place per Equipment Plan, Sheet QF-111; Fabrication Detail, Sheet QF-502; and the following:

1. Front and end edge rolls per Detail 1.02B.

2. 13" high backsplash per Detail 1.04A. One (1) unit with partial right end splash.

3. Framework per Detail 1.05.

4. Legs per Detail 1.07.

5. Stainless steel undershelf on both ends per Detail 1.11.

6. Sound-deaden underside of sinks and drainboards with NSF-approved sound dampening material.

ITEM #C24: (Continued)

7. Accessories:
   -- One (1) T&S #B-0231 backsplash-mounted swing spout faucet with #B-0199-1 aerator.
   -- Two (2) T&S #B-3950-01 twist waste valves with overflow assemblies and #010387-45 basket strainers.

8. Item will remain shrink-wrapped until ready for final connection by Plumbing Contractor. Immediately following completion of final connections, K.E.C. shall re-shrink-wrap tubs or provide removable panel to avoid use by construction trades. Post sign on wall above sink tubs in English and Spanish stating: WARNING! NOT TO BE USED BY CONSTRUCTION TRADES. FAILURE TO COMPLY WILL RESULT IN $500.00 FINE AND ALL COSTS TO REPLACE ITEM WITH NEW.

ITEM #C25: MIXER, 5-QUART

QUANTITY:	Six (6)
MANUFACTURER:	Hobart
MODEL NO.:	N50 (N058)
PERTINENT DATA:	Standard Enamel Finish, 5-Quart, With Bowl Lift
UTILITIES REQ'D:	1/6 HP, 120V, 1PH
ALTERNATE MFR.:	Globe

Furnish and set-in-place per Equipment Plan, Sheet QF-111; Manufacturer's Instructions and the following:

1. Standard package to include one (1) each: 5-quart stainless steel bowl, stainless steel wire whip, flat beater and dough hook.

2. Cord and plug set.

ITEM #C26: EYE WASH STATION

QUANTITY:	One (1)
MANUFACTURER:	T&S Brass
MODEL NO.:	EW-7360B-TMV (N058)
PERTINENT DATA:	Wall-Mounted, Dual Aerated Spray Heads with Automatic Flow Control, Stainless Steel Bowl, With Thermostatic Mixing Valve
UTILITIES REQ'D:	1/2" HW, 1/2" CW, 1-1/4" W
ALTERNATE MFRS.:	Speakman Company

Furnish and install per Equipment Plan, Sheet QF-111; Manufacturer's Instructions and the following:

1. Accessories:
   -- P-trap.
   -- Flow switch.
   -- Eye wash station emergency signage.
   -- Scald protection valve.

ITEM #C27: WORKCOUNTER WITH SINK

QUANTITY: One (1)
MANUFACTURER: Garland
MODEL NO.: Custom
PERTINENT DATA: Enclosed Storage Base, 34½" Long x 34" Deep, 14-Ga. Stainless Steel Top
UTILITIES REQ'D: 25.0A, 120/208V, 3PH; ½" HW, ½" CW 1½" IW
ALTERNATE MFRS.: None

Furnish and set-in-place per Equipment Plan, Sheet K101; Range Suite Details, Sheet QF-514, Manufacturer's Shop Drawing and the following:

1. Accessories:
   -- One (1) #FB16-121410 12"x14"x10" deep stainless steel sink.
   -- One (1) #2578800 hot and cold water faucet.

2. Mechanical service housed in counter, Item #C29.

ITEM #C28: RANGE/OVEN

QUANTITY: Three (3)
MANUFACTURER: Garland
MODEL NO.: MST43R-E (N058)
PERTINENT DATA: Heavy-Duty, Standard Oven Base, (6) Open Burners, Master Sentry Series, Electronic Ignition, Flame Failure Protection
UTILITIES REQ'D: 3.4A, 120V, 1PH; 1-1/4" Natural Gas @ 180MBH
ALTERNATE MFRS.: None

Furnish and set-in-place per Equipment Plan, Sheet QF-111; Range Suite Detail, Sheet QF-514; Manufacturer's Instructions and the following:

1. Accessories:
   -- 6" high stainless steel legs with adjustable bullet feet.
   -- Stainless steel front, back and both sides.
   -- 1-1/4" front gas connection.
   -- Stainless steel backriser and flue cover.
   -- Pressure regulator.
   -- Stainless steel common rail.
   -- Stainless steel towel rail to fit 1/9 size pans.

2. Mechanical & electrical services housed in counter, Item #C29.

ITEM #C29: WORKCOUNTER WITH SINK

QUANTITY: One (1)
MANUFACTURER: Garland
MODEL NO.: Custom
PERTINENT DATA: Enclosed Storage Base, 80" Long x 34" Deep, 14-Ga. Stainless Steel Top
UTILITIES REQ'D: 125.0A, 120/208V, 3PH; ½" HW, ½" CW 1½" IW
ALTERNATE MFRS.: None

Furnish and set-in-place per Equipment Plan, Sheet QF-111; Range Suite Details, Sheet QF-514, Manufacturer's Shop Drawing and the following:

1. Accessories:
   -- One (1) #FB16-121410 12"x14"x10" deep stainless steel sink.
   -- One (1) #2578800 hot and cold water faucet.
   -- Two (2) #4522422 1" gas pressure regulators.
   -- Two (2) #2542200 1" gas shut-off valves.

2. Electrical load center per Detail, Sheet QF-514.

ITEM #C30: VENTILATOR

QUANTITY: One (1)
MANUFACTURER: Captive-Aire
MODEL NO.: 5430-ND2-PSP-F (N058)
PERTINENT DATA: Island Back-to-Back Configuration, High Efficiency Filter, With Fire Protection System
UTILITIES REQ'D: 7,290 CFM Exhaust/5,832 CFM Supply; 350W, 120V, 1PH (Lights); 20A, 120V, 1PH, 24-Hour Dedicated Service (Fire Protection System)
ALTERNATE MFRS.: None

Furnish and install per Equipment Plan, Sheet QF-111; Ventilator Detail Drawings, Sheet QF-506 and Sheet QF-507; Manufacturer's Shop Drawing and the following:

1. Two (2) 5'-6" Wide x 13'-6" Long x 2'-6" High, with bottom edge mounted at 6'-8" A.F.F. Length comprised of two (2) 13'-6" long sections. Entire unit constructed of 18 GA - 304 stainless steel #4 mill finish with liquid tight all welded external continuous seams and joints per N.F.P.A. 96, U.L. and State of Delaware Codes.

2. Eight (8) U.L. Listed, NSF-Approved, 12" x 12" recessed LED light fixtures, four (4) equally spaced per section, pre-wired to common junction box.

3. Matching stainless steel perimeter closure panels to finished ceiling; K.E.C. to verify ceiling height.

4. Surface fire protection system nozzles and piping to be installed at manufacturer's factory at time of fabrication. All exposed pipe and fittings shall be chrome-plate or stainless steel.

5. Hanger rods and support system from structure above by General Contractor. K.E.C. to coordinate method and location with other trades.

ITEM #C30: (Continued)

6. Stainless steel hanger brackets.

7. Stainless steel U.L. Classified 20" captrate solo grease filters with hook.

8. Semi-concealed stainless steel grease trough sloped to removable grease cups.

9. HVAC Contractor to provide tempered supply air during winter months: 60º F - 65º F.

10. Factory System Design Verification (SDV) shall be performed after all inspections are complete. SDV report shall be available once completed.

11. Ventilator shall be of same manufacturer as Utility Raceway, Item #C16.

12. Accessories:
    - -- 12" wide utility cabinet mounted on right end of hood section with factory pre-piped Ansul R-102 fire suppression system and U.L. Listed pre-wired electrical package consisting of: light switches, lighted fan control switches, and internal factory wiring and components to reduce field wiring requirements.
    - -- One (1) Ansul Model K01-2 hand-held fire extinguisher, 1.6 gallon, wall-mounted.
    - -- Six-month and twelve-month inspections, servicing, and replacement of components as per NFPA-96 Latest Edition.
    - -- Reinforced front apron for mounting of stainless steel two-tier utensil rack.
    - -- One (1) 7'-6" long single-tier stainless steel utensil rack to be furnished and installed by K.E.C. on front apron of each hood section.

ITEM #C31: FRYER ASSEMBLY, MOBILE

QUANTITY:	One (1)
MANUFACTURER:	Frymaster Corporation
MODEL NO.:	FPPH255-SC (N058)
PERTINENT DATA:	50-Pound Capacity, Full Pot, FootPrint PRO Filter System
UTILITIES REQ'D:	4.0A, 120V, 1PH (Controls/Basket Lift); 10.0A, 120V, 1PH (Filter); 1" Natural Gas @ 160 MBH
ALTERNATE MFRS.:	None

Furnish and set-in-place per Equipment Plan, Sheet QF-111; Range Suite Details, Sheet QF-514; Manufacturer's Instructions and the following:

1. Stainless steel pot, end and sides.

2. Timed-controlled automatic basket lifters.

3. Accessories:
    - -- Two (2) #8063068 full-pot covers.
    - -- Two (2) #8030113 full-pot sediment trays.
    - -- Four (4) #8030271 twin-size baskets.
    - -- Heavy-duty 5" diameter swivel casters, front (2) with brakes.
    - -- One (1) #2591998 1" gas flex hose and quick disconnect with restraining device.

ITEM #C31: (Continued)

-- Built-in filtration system.

4. Mechanical and electrical services housed in counter, Item #C29.

ITEM #C32: GRIDDLE/OVEN

QUANTITY: One (1)
MANUFACTURER: Garland Commercial Industries, Inc.
MODEL NO.: MST47R-E (N058)
PERTINENT DATA: Heavy-Duty, Standard Oven Base, Valve Controlled, Master Sentry Series, Electronic Ignition, Plancha Top
UTILITIES REQ'D: 5.0A, 120V, 1PH; ¾" Natural Gas @ 139MBH
ALTERNATE MFRS.: None

Furnish and set-in-place per Equipment Plan, Sheet QF-111; Range Suite Detail, Sheet QF-514; Manufacturer's Instructions and the following:

1. Accessories:
   -- 6" high stainless steel legs with adjustable bullet feet.
   -- Stainless steel front, back and both sides.
   -- 1-1/4" front gas connection.
   -- Stainless steel backriser and flue cover.
   -- Pressure regulator.
   -- Stainless steel common rail.
   -- Stainless steel towel rail to fit 1/9 size pans.

2. Mechanical & electrical services housed in counter, Item #C29.

ITEM #C33: CHAR-BROILER, MOBILE

QUANTITY: One (1)
MANUFACTURER: Garland/U.S. Range
MODEL NO.: MST34BE (N058)
PERTINENT DATA: Master Series, 34" Wide, Electronic Ignition, Flame Failure Protection
UTILITIES REQ'D: 5.0A, 120V, 1PH; ¾" Natural Gas @ 90MBH
ALTERNATE MFR.: None

Furnish and set-in-place per Equipment Plan, Sheet QF-111; Range Suite Detail, Sheet QF-514; Manufacturer's Instructions and the following:

1. Accessories:
   -- Stainless steel front and both sides.
   -- Stainless steel backriser and flue cover.
   -- ¾” rear gas connection. Cap and cover manifold ends.
   -- Four (4) heavy-duty 5" diameter polyurethane swivel casters, front (2) with brakes.
   -- Pressure regulator.

ITEM #C33: (Continued)

2. Mechanical & electrical services housed in counter, Item #C29.

ITEM #C34: INDUCTION RANGE

QUANTITY: One (1)
MANUFACTURER: Garland
MODEL NO.: Custom
PERTINENT DATA: Enclosed Storage Base, 41½" Long x 34" Deep, 14-Ga. Stainless Steel Top
UTILITIES REQ'D: 22.0A, 208V, 3PH
ALTERNATE MFRS.: None

Furnish and set-in-place per Equipment Plan, Sheet QF-111; Range Suite Details, Sheet QF-514, Manufacturer's Shop Drawing and the following:

1. One (1) custom 41½" L x 34" stainless steel cabinet base with cut-out to accept Garland #MODU7000650-208 Induction Range per Detail, Sheet QF-514.

2. Accessories:
   -- Stainless steel common rail.
   -- Stainless steel backriser and fluecover.
   -- Four (4) 5-15R (G.F.I.) NEMA rated electrical receptacles.

3. Provide base with a minimum of 30" wide x 27" high opening for ADA access.

4. Mechanical and electrical services housed in counter, Item #C29.

ITEM #C35: CHEF'S COUNTER

QUANTITY: One (1)
MANUFACTURER: The Delfield Company
MODEL NO.: F16HD27-MOD (N058)
PERTINENT DATA: Open Storage Base, 27" long x 31-½" Deep, 14-Ga. Stainless Steel Top
UTILITIES REQ'D: ----
ALTERNATE MFR.: Randell Manufacturing, Inc.

Furnish and set-in-place per Equipment Plan, Sheet QF-111; Manufacturer's Shop Drawing and the following:

1. Open understorage with bottom stainless steel shelf.

2. 6" high stainless steel legs with adjustable bullet feet.

3. 14" W. x 18" L. x 10" D. stainless steel utility sink with T&S #B-325 deck-mounted swivel gooseneck faucet and basket drain.

4. Stainless steel hinged door.

ITEM #C35: (Continued)

5. 8" high stainless steel back and right endsplash.

ITEM #C35A: STORAGE CABINET

QUANTITY: One (1)
MANUFACTURER: The Delfield Company
MODEL NO.: F16OS96-MOD (N058)
PERTINENT DATA: Open Storage Base, 12" Deep x 11'-6" Long
UTILITIES REQ'D: ----
ALTERNATE MFR.: Randell Manufacturing, Inc.

Furnish and set-in-place per Equipment Plan, Sheet QF-111; Manufacturer's Shop Drawing and the following:

1. Tray lock top.

2. Open understorage with bottom and intermediate stainless steel shelves.

3. Finished stainless steel right and left ends.

4. 6" high stainless steel legs with adjustable bullet feet.

ITEM #C35B: OVERSHELF

QUANTITY: One (1)
MANUFACTURER: The Delfield Company
MODEL NO.: 605C2 (N058)
PERTINENT DATA: 9'-0" Long x 12" Wide, Deck Mounted, Two-Tier
UTILITIES REQ'D: ----
ALTERNATE MFR.: Randell Manufacturing, Inc.

Furnish and set-in-place per Equipment Plan, Sheet QF-111; Manufacturer's Shop Drawing and the following:

1. 9'-0" long x 24" wide with #606 microwave shelf on left end.

2. #1009 pedestal receptacle mounted on microwave shelf.

3. One (1) Hatco #GRA-48 infrared heat lamp mounted to underside of top shelf centered over hot food wells section.

4. Provide extended angled printer shelf centrally mounted with pedestal receptacle.

ITEM #C36: MICROWAVE/CONVECTION OVEN

QUANTITY: One (1)
MANUFACTURER: Merrychef
MODEL NO.: E2S Standard Classic (N058)
PERTINENT DATA: Stainless Steel Cavity, Door & Cabinet, With Touch Screen Control Panel
UTILITIES REQ'D: 20.0A, 208V, 1PH
ALTERNATE MFRS.: Turbo Chef #Sota i3

Furnish and set-in-place per Equipment Plan, Sheet QF-111; Manufacturer's Instructions and the following:

1. Cord and plug set.

ITEM #C37: HOT FOOD WELLS SECTION

QUANTITY: One (1)
MANUFACTURER: The Delfield Company
MODEL NO.: F14EI348 (N058)
PERTINENT DATA: 31-½" Deep, Electrically Heated, Open Base, Three (3) Wells, With Plate Shelf, 14-Ga. Stainless Steel Top
UTILITIES REQ'D: 15.0A, 208V, 1PH; ½" HW, 1" IW
ALTERNATE MFR.: Randell Manufacturing, Inc.

Furnish and set-in-place per Equipment Plan, Sheet QF-111; Manufacturer's Shop Drawing and the following:

1. Wells with individual drains manifolded to common drain valve mounted on left. Locate valve on chef’s side below plate shelf for easy access.

2. Swing spout fill faucet mounted on left end.

3. #1006A, 10" wide x 1/2" thick x full-length Richlite™ removable and reversible cutting board.

4. 6" high stainless steel legs with adjustable bullet feet.

5. Accessories:
   -- Three (3) Vollrath Company #30040 full-size pans.

ITEM #C38: SANDWICH PREP TABLE, MOBILE

QUANTITY: One (1)
MANUFACTURER: The Delfield Company
MODEL NO.: F18SC39A (N058)
PERTINENT DATA: 31-½" Deep, 39" Long, Self-Contained, 14-Ga. Stainless Steel Top
UTILITIES REQ'D: 7.0A, 120V, 1PH
ALTERNATE MFR.: Randell Manufacturing, Inc.

ITEM #C38: (Continued)

Furnish and set-in-place per Equipment Plan, Sheet QF-111; Manufacturer's Shop Drawing and the following:

1. 19" wide x 1/2" thick x full-length Richlite™ removable and reversible cutting board.

2. Accessories:
   -- Six (6) Vollrath #90662 1/6 size pans and adapter bars.
   -- Cylinder door locks, keyed-alike.
   -- Set of four (4), 5" diameter heavy-duty swivel-type locking, two (2) front casters with brakes.

ITEM #C39: PASS-THRU REFRIGERATOR, MOBILE

QUANTITY: One (1)
MANUFACTURER: Victory
MODEL NO.: RS-1D-S1-PT-HD MOD (N058)
PERTINENT DATA: One-Section, Self-Contained, Stainless Steel Interior/Exterior
UTILITIES REQ'D: 9.8A, 120V, 1PH
ALTERNATE MFRS.: None

Furnish and set-in-place per Equipment Plan, Sheet QF-111; Manufacturer's Instructions and the following:

1. Half-height doors hinged per Equipment Plan. Glass doors on kitchen side, solid doors on serving side.

2. Cylinder door locks, keyed-alike.

3. #1 type tray slide assembly for 18"x26" sheet pans with 2" spacing, each compartment.

4. Exterior mounted digital thermometer installed on kitchen side.

5. Set of four (4), 5" diameter heavy-duty swivel-type locking, two (2) front casters with brakes.

6. Cord and plug set.

ITEM #C40: ICE MACHINE/BIN

QUANTITY: One (1)
MANUFACTURER: Manitowoc
MODEL NO.: IY-0504A/B-570 (N058)
PERTINENT DATA: Air-Cooled, 560-LB. Maker, 570-LB. Bin, Half-Dice Cube Size
UTILITIES REQ'D: 14.2A, 120V, 1PH; ½" CW, ½" IW (Maker Drain), ¾" IW (Bin Drain)
ALTERNATE MFRS.: Ice-O-Matic; Scotsman

Furnish and set-in-place per Equipment Plan, Sheet QF-111; Manufacturer's Instructions and the following:

ITEM #C40: (Continued)

1. Stainless steel exterior finish, ice machine and bin.

2. Accessories:
   -- One (1) Everpure #EV9324-21 InsurIce i2000² Single water filter system with primary and coarse filter mounted on manufacturer's common wall bracket.
   -- 6" high stainless steel leg set with adjustable bullet feet.
   -- Custom fabricated stainless steel ice scoop holder mounted to left side of bin per Detail Sheet QF-502.

3. Backflow prevention device installed on incoming water line by Plumbing Contractor.

4. Cord and plug with matching receptacle furnished and installed by Electrical Contractor.

ITEM #C41: WORKTABLE

QUANTITY: One (1)
MANUFACTURER: Custom Fabricated
MODEL NO.: #14 GA Stainless Steel
PERTINENT DATA: 4'-0" Long x 2'-6" Wide x 3'-0" High
UTILITIES REQ'D: 1/2" HW, 1/2" CW, 1-1/2" IW
ALTERNATE MFRS.: None

Fabricate and set-in-place per Equipment Plan, Sheet QF-111; Fabrication Detail, Sheet QF-502 and the following:

1. Front and end edge roll per Detail 1.02M.

2. 6" high back and left end splash per Detail 1.04A.

3. Framework per Detail 1.05.

4. Legs per Detail 1.07.

5. Stainless steel undershelf per Detail 1.11.

6. One (1) stainless steel drawer assembly per Detail 1.14, Type I, with lock.

7. Worktable per Detail 2.01.

ITEM #C42: REFRIGERATED MERCHANDISER, MOBILE

QUANTITY: One (1)
MANUFACTURER: True Food Service Equipment, Inc.
MODEL NO.: GDM-47-LD (N058)
PERTINENT DATA: Two-Section, Self-Contained, Stainless Steel Interior/Exterior
UTILITIES REQ'D: 8.5A, 120V, 1PH
ALTERNATE MFRS.: Beverage-Air

ITEM #C42: (Continued)

Furnish and set-in-place per Equipment Plan, Sheet QF-111; Manufacturer's Instructions and the following:

1. Full-height glass door, hinged per Equipment Plan.

2. Cylinder door locks keyed alike.

3. Epoxy-coated wire shelves, twelve (12) total.

4. Exterior mounted digital thermometer.

5. Set of four (4), 5" diameter heavy-duty swivel-type locking, two (2) front casters with brakes.

6. Cord and plug set.

ITEM #C43: BEVERAGE COUNTER

QUANTITY: One (1)
MANUFACTURER: Custom Fabricated
MODEL NO.: #14 GA Stainless Steel
PERTINENT DATA: 7'-0" Long x 2'-6" Wide x 3'-0" High
UTILITIES REQ'D: ----
ALTERNATE MFR.: None

Fabricate and set-in-place per Equipment Plan, K101; Fabrication Detail, Sheet K501; and the following:

1. Front and end edge rolls per Detail 1.02M.

2. 6" high backsplash per Detail 1.04A.

3. Framework per Detail 1.06.

4. Heavy-duty counter legs per Detail 1.08.

5. Workcounter Detail 4.01.

6. Sound-deaden underside of countertop with NSF-approved sound dampening material.

ITEM #C44: HEATED CABINET, MOBILE

QUANTITY: Two (2)
MANUFACTURER: Winston Industries
MODEL NO.: HA4522 (N058)
PERTINENT DATA: One-Section, Stainless Steel Exterior & Interior, With Fan
UTILITIES REQ'D: 19.3A, 120V, 1PH
ALTERNATE MFRS.: None

ITEM #C44: (Continued)

Furnish and set-in-place per Equipment Plan, Sheet QF-111; Manufacturer's Instructions and the following:

1. Half-height doors hinged per Equipment Plan.

2. Accessories:
   -- Full-perimeter, wrap-around, non-marking vinyl bumper.
   -- Four (4) 5" diameter heavy-duty swivel casters, front two (2) with brakes.

3. Cord and plug set.

ITEM #C45: CAFÉ BACKCOUNTER WITH SINK

QUANTITY:	One (1)
MANUFACTURER:	Custom Fabricated
MODEL NO.:	Stainless Steel Construction, Solid Surface Extended Top, Laminate Front and Ends
PERTINENT DATA:	13'-0" Long x 2'-9" Wide x 2'-10" High
UTILITIES REQ'D:	----
ALTERNATE MFR.:	None

Fabricate and set-in-place per Equipment Plan, QF-111; Fabrication Detail, Sheet QF-502; and the following:

1. Base cabinet constructed of stainless steel all-welded angle frame per Detail 4.01.

2. Stainless steel hinged doors with decorative laminate finish per Detail 4.26, color as selected by Architect, K.E.C. to verify.

3. Heavy-duty counter legs per Detail 1.08. Stainless steel skirting on front and exposed ends.

4. Solid surface top and backsplash; color as selected by Architect, K.E.C. to verify.

5. 14" x 16" x 8" deep utility sink per Detail 3.04 with waste lever angle bracket welded to underside of sink.

6. Provide cut-out in top for Item #C46: Ice and Water Station.

7. Accessories:
   -- One (1) Dispense-Rite #CTC-R-3SS countertop, one-size-fits-all, 8 oz. to 44 oz., stainless finish cup dispenser.
   -- One (1) T&S #B-325 deck-mounted swivel gooseneck faucet with #B-199-2 aerator.

ITEM #C46: ICE & WATER STATION

QUANTITY: One (1)
MANUFACTURER: The Delfield Company
MODEL NO: 204 (N058)
PERTINENT DATA: Drop-in, 45-Lb. Capacity
UTILITIES REQ'D: 1/2" CW, (2)1" IW
ALTERNATE MFR.: Randell

Furnish and install in Café Backcounter per Equipment Plan, Sheet QF-111; Manufacturer's Instructions and the following:

1. Install in top cut-out opening of Café Backcounter, Item #C45.

ITEM #C47: BAR BLENDER

QUANTITY: One (1)
MANUFACTURER: Hamilton Beach
MODEL NO: HBH850 (N058)
PERTINENT DATA: Countertop, Two-Speed Motor, Auto Blend, With 64-Oz. Polycarbonate Container & Quiet Shield
UTILITIES REQ'D: 13.0A, 120V, 1PH
ALTERNATE MFR.: Waring

Furnish and set-in-place per Equipment Plan, Sheet QF-111; Manufacturer's Instructions and the following:

1. Accessories:
   -- Two (2) #6126-650 64-oz. polycarbonate container.

2. Cord and plug set.

ITEM #C48: LID & STRAW DISPENSER

QUANTITY: Two (2)
MANUFACTURER: Dispense-Rite
MODEL NO.: TLO-3SS (N058)
PERTINENT DATA: Countertop, Stainless Steel Construction
UTILITIES REQ'D: ----
ALTERNATE MFR.: None

Furnish and set-in-place per Equipment Plan, Sheet QF-111 and Manufacturer's Instructions.

ITEM #C49: FOOD PROCESSOR

QUANTITY: One (1)
MANUFACTURER: Robot Coupe USA, Inc.
MODEL NO.: R-602VV (N058)
PERTINENT DATA: Continuous Feed Hopper, Dual Purpose, Variable Speed, 7-Qt. Bowl
UTILITIES REQ'D: 15.0A, 120V, 1PH
ALTERNATE MFRS.: None

Furnish and set-in-place per Equipment Plan, Sheet QF-111; Manufacturer's Instructions and the following:

1. Standard food processor package consisting of: food processor, 7-qt. stainless steel bowl, continuous feed vegetable preparation attachment, (1) #28058 1/8" grating disc and (1) #28064 1/8" slicing disc.

2. Accessories:
   -- One (1) #R255 disc rack.

3. Cord and plug

ITEM #C50: SMOOTHIE MACHINE

QUANTITY: One (1)
MANUFACTURER: Cecilware
MODEL NO.: MT-2-ULAF (N058)
PERTINENT DATA: FrigoGranita, Double 2-1/2 Gallon Capacity, Stainless Steel Finish
UTILITIES REQ'D: 1/2HP, 120V, 1PH
ALTERNATE MFRS.: None

Furnish and set-in-place per Equipment Plan, Sheet QF-111; Manufacturer's Instructions and the following:

1. Cord and plug set.

ITEM #C51: UNDERCOUNTER REFRIGERATOR, MOBILE

QUANTITY: One (1)
MANUFACTURER: Beverage-Air
MODEL NO.: UCR48A (N058)
PERTINENT DATA: Two-Section, Self-Contained, Front-Breathing; 13.9 Cu. Ft. Capacity, Stainless Steel Exterior/Interior, 29" Deep
UTILITIES REQ'D: 3.3A, 120V, 1PH
ALTERNATE MFR.: None

Furnish and set-in-place per Equipment Plan, Sheet QF-111; Manufacturer's Instructions and the following:

ITEM #C51: (Continued)

1. Accessories:
   -- Cylinder door lock.
   -- Front door with plastic laminate finish; color as selected by Architect; K.E.C. to verify.
   -- 3" casters.

2. Cord and plug set.

ITEM #C52: CUP DISPENSER

QUANTITY:	One (1)
MANUFACTURER:	Dispense-Rite by Diversified Metal Products
MODEL NO.:	ADJ-2 (N058)
PERTINENT DATA:	Built-in, One-Size-Fits-All, 8 oz. to 44 oz., Stainless Finish, 22" Length
UTILITIES REQ'D:	----
ALTERNATE MFR.:	None

Furnish and install in Serving Counter per Equipment Plan, Sheet QF-111; Fabrication Detail, Sheet QF-502; Manufacturer's Instructions and the following:

1. Unit installed horizontally in recessed counter front.

ITEM #C53: SERVING COUNTER

QUANTITY:	One (1)
MANUFACTURER:	Custom Fabricated
MODEL NO.:	Stainless Steel Construction, Extended Solid Surface Top, Laminate Front and Sides
PERTINENT DATA:	16'-6" Long x 2'-11" Wide x 2'-10" High
UTILITIES REQ'D:	----
ALTERNATE MFR.:	None

Fabricate and set-in-place per Equipment Plan, QF-111; Fabrication Detail, Sheet QF-502; and the following:

1. Base cabinet constructed of stainless steel all-welded angle frame per Detail 4.01.

2. Stainless steel front and end paneling per Detail 4.05A with plastic laminate finish; color as selected by Architect.

3. Heavy-duty counter legs per Detail 1.08. Stainless steel skirting on front and exposed ends.

4. Solid surface top; color as selected by Architect, K.E.C. to verify.

5. Provide cut-out in top with grommet for power cord access to receptacle in floor and access for milk hoses for Item #C56: Espresso Machine.

ITEM #C53: (Continued)

6. Cashier's drawer assembly with stainless steel pull and cylinder lock sized for removable compartmented plastic cash tray and lock; Indiana Cash Drawer Co., Model #5-BT.

7. Accessories:
   -- One (1) BSI #ZG9500-4 Z-Guard Vertical Partition, 1" Tubular Uprights, 1/4" Tempered Glass Vertical Panels, 22" High, NSF 2 Compliant food protector mounted securely to top of counter with undercounter flamge-mount.

ITEM #C54: REFRIGERATED DISPLAY MERCHANDISER

QUANTITY: One (1)
MANUFACTURER: Structural Concepts
MODEL NO.: CO53R-UC (N058)
PERTINENT DATA: Free-Standing, Self-Contained, Front-Loading
UTILITIES REQ'D: 14.58A, 120V, 1PH; 1" IW
ALTERNATE MFRS.: None

Furnish and set-in-place per Equipment Plan, Sheet QF-111; Manufacturer's Instructions, and the following:

1. Accessories:
   -- Shelf lights.
   -- Roll-down security cover.
   -- 5-year compressor warranty.
   -- Exterior laminate finish, color as selected by Architect.

2. Cord and plug set.

ITEM #C55: AIRPOT COFFEE BREWER

QUANTITY: One (1)
MANUFACTURER: Bunn-O-Matic Corp.
MODEL NO.: CWTF Twin APS (N058)
PERTINENT DATA: Automatic, Twin, For Airpots
UTILITIES REQ'D: 26.0A, 120/208V, 1PH; 1/4" CW
ALTERNATE MFR.: None

Furnish and set-in-place per Equipment Plan, Sheet QF-111, Manufacturer's Instructions and the following:

1. Accessories:
   -- One (1) #ED-11-TL water filter mounted below countertop.
   -- One (1) #20115.0000 filter pack.
   -- Two (2) #32125.0000 2.5 liter capacity, lever-action airpots.

ITEM #C56: ESPRESSO MACHINE

QUANTITY: One (1)
MANUFACTURER: Rancilio Egro
MODEL NO: One Pure Coffee (N058)
PERTINENT DATA: Fully Automatic With Built-In Grinder, Double Hopper
UTILITIES REQ'D: 30.0A, 208V, 1PH; 1/2" CW, 3/4" IW
ALTERNATE MFRS.: None

Furnish and set-in-place per Equipment Plan, Sheet QF-111; Manufacturer's Instructions and the following:

1. Accessories:
   -- One (1) Everpure #QL2-OCS water filter.
   -- One (1) powder module.

2. Cord and plug set.

ITEM #C57: CASH REGISTER -- (N.I.C. – FURNISHED BY OWNER)

QUANTITY: One (1)

ITEM #C58: TRASH CONTAINER, MOBILE

QUANTITY: Four (4)
MANUFACTURER: Rubbermaid Commercial Products, Inc.
MODEL NO.: FG263200GRAY (N058)
PERTINENT DATA: 32-Gallon Capacity
UTILITIES REQ'D: ----
ALTERNATE MFRS.: None

Furnish and set-in-place per Equipment Plan, Sheet QF-111; Manufacturer's Instructions and the following:

1. Accessories:
   -- Four (4) #FG263100GRAY matching flat lids.
   -- Four (4) #FG264000BLA conversion dollies.

ITEM #C59: SOILED DISHTABLE

QUANTITY: One (1)
MANUFACTURER: Custom Fabricated
MODEL NO.: #14 GA Stainless Steel
PERTINENT DATA: 7'-0"± Long x 2'-6" Wide x 2'-10" High
UTILITIES REQ'D: 1/2" HW, 1/2" CW, 1-1/2" IW
ALTERNATE MFRS.: None

ITEM #C59: (Continued)

Fabricate and set-in-place per Equipment Plan, Sheet QF-111; Fabrication Detail, Sheet QF-502; and the following:

1. Front edge roll per Detail 1.02B.

2. 13" high back and right endsplash per Detail 1.04A.

3. Framework per Detail 1.05.

4. Legs per Detail 1.07.

5. Crossbracing per Detail 1.10.

6. Soiled dishtable per Detail 2.02.

7. Table trough at entrance to dishmachine per Detail 2.03.

8. Weld collar adapter to underside of sink for Disposer, Item #C60.

9. Stainless steel disposer switch bracket.

10. 2-0" long table-mounted single-sided slanted glass rack shelf per Detail 2.19.

11. 20" wide x 8" deep integral pre-rinse sink with one-piece removable #22 gauge perforated stainless steel scrap basket with 1" diameter fully welded tubular cross-rails set flush with tabletop. Raise deck at rear of sink 6" for deck-mounted pre-rinse spray and extend to opening of dishmachine to act as rack guide.

11. Sound-deaden underside of drainboard with NSF-approved sound dampening material.

12. Accessories:
    -- One (1) T&S #B-133 backsplash-mounted pre-rinse spray with built-in back flow preventer and #B-109 wall bracket.

ITEM #C60: DISPOSER

QUANTITY:	One (1)
MANUFACTURER:	In-Sink-Erator
MODEL NO.:	SS-200-7-MRS (N058)
PERTINENT DATA:	#7 Collar Adapter Assembly
UTILITIES REQ'D:	2.0 HP, 480V, 3PH; 1/2" CW, 2" W
ALTERNATE MFRS.:	Salvajor

Furnish and install per Equipment Plan, Sheet QF-111; Manufacturer's Instructions and the following:

1. Manual reverse switch mounted on 14 GA stainless steel bracket.

2. Weld No. 7 collar adapter to underside of pre-rinse sink, Item #C59.

ITEM #C60: (Continued)

3. Accessories:
   -- One (1) T&S Model #B-455 vacuum breaker in lieu of standard unit.

ITEM #C61: CONDENSATE CANOPY

QUANTITY: One (1)
MANUFACTURER: Captive-Aire
MODEL NO: 4230-VHB-G (N058)
PERTINENT DATA: Stainless Steel, Exhaust Only Canopy
UTILITIES REQ'D: 525 CFM; 3/4" IW
ALTERNATE MFR.: Avtec; Gaylord

Fabricate and install per Equipment Plan, Sheet QF-111; Canopy Details, Sheet QF-506; Manufacturer's Shop Drawing and the following:

1. 3'-6" wide x 3'-6" long x 2'-0" high with bottom edge mounted at 6'-8" A.F.F. Entire unit constructed of 18 GA type 304 stainless steel with #4 finish on all exposed surfaces.

2. 2" wide full-perimeter integral gutter with 1/2" turn-up and 3/4" stainless steel drain connection.

3. Integral stainless steel rod hanger brackets, each corner.

4. Stainless steel duct tap collar with removable aluminum mesh filter.

5. Stainless steel perimeter closure panels to finished ceiling by K.E.C.; verify ceiling height.

6. Accessories:
   -- #18GA stainless steel wall flashing from bottom edge of hood to top of finish floor base. Extend full-length of hood body. Attach to wall with non-exposed fasteners.

ITEM #C62: DISHMACHINE

QUANTITY: One (1)
MANUFACTURER: Hobart Corporation
MODEL NO: AM15T (N058)
PERTINENT DATA: Fully-Automatic, High-Temp, Door-Type, With Built-in Booster Heater (70°F Rise), Tall Chamber
UTILITIES REQ'D: 23.7A, 480V, 3PH; 10.0A, 120V, 1PH; 3/4"HW (140°F.), 1/2"CW (Drain Water Cooling Kit), 2" IW
ALTERNATE MFR.: None

Furnish and set-in-place per Equipment Plan, Sheet QF-111; Manufacturer's Instructions and the following:

1. Factory installed vacuum breaker.

2. Soap dispensing system and rinse additive system by chemical vendor.

ITEM #C62: (Continued)

3. Stainless steel feet, frame, legs and front panel.

4. Electric tank heat.

5. Straight-thru installation.

6. Accessories:
   -- Two (2) #DISHRAK-PEG20 peg-type dish racks.
   -- Two (2) #DISHRAK-COM20 combination-type dish racks.
   -- One (1) #DWT1 drain water tempering kit.
   -- One (1) built-in booster heater.
   -- One (1) #WTRHAM-ARREST water hammer arrestor kit with brass pressure regulator valve.
   -- One (1) #SPEC-KIT single-point electrical connection.
   -- One (1) #SPLASH PNL15 splash panel kit for corner installation.

ITEM #C63: CLEAN DISHTABLE/POT WASHING SINK

QUANTITY: One (1)
MANUFACTURER: Custom Fabricated
MODEL NO.: #14 GA Stainless Steel
PERTINENT DATA: 13'-0"± Long x 2'-6" Wide x 2'-10" High
UTILITIES REQ'D: (2) 3/4" HW, (2) 3/4" CW, (3) 2" IW
ALTERNATE MFRS.: None

Fabricate and set-in-place per Equipment Plan, Sheet QF-111; Fabrication Detail, Sheet QF-502; and the following:

1. Front and left end edge rolls per Detail 1.02B.

2. 13" high backsplash per Detail 1.04A.

3. Framework per Detail 1.05.

4. Legs per Detail 1.07.

5. Crossbracing per Detail 1.10.

6. Stainless steel undershelf on both ends per Detail 1.11.

7. 10'-0" long table-mounted stainless steel overshelf with stainless steel sliding pot hooks per Detail 1.12.

8. Dishtable per Detail 2.02.

9. Pot sink and drainboards per Detail 3.01.

10. Sound-deaden underside of sinks and drainboards with NSF-approved sound dampening material.

ITEM #C63: (Continued)

11. Accessories:
    -- Two (2) T&S #B-290 backsplash mounted swing spout faucets.
    -- Three (3) T&S #B-3950-01 twist handle drains with rear-connected over-flows and basket strainers.

12. Item will remain shrink-wrapped until ready for final connection by Plumbing Contractor. Immediately following completion of final connections, K.E.C. shall re-shrink-wrap tubs or provide removable panel to avoid use by construction trades. Post sign on wall above sink tubs in English and Spanish stating: WARNING! NOT TO BE USED BY CONSTRUCTION TRADES. FAILURE TO COMPLY WILL RESULT IN $500.00 FINE AND ALL COSTS TO REPLACE ITEM WITH NEW.

ITEM #C64: POT & PAN SHELVING, MOBILE

QUANTITY: One (1)
MANUFACTURER: InterMetro Industries Corporation
MODEL NO.: MetroMax i (N058)
PERTINENT DATA: Four-Tier High, Open-Grid Shelf Mat, Polymer
UTILITIES REQ'D: ----
ALTERNATE MFRS.: None

Furnish and set-in-place per Equipment Plan, Sheet QF-111; Manufacturer's Instructions and the following:

1. One (1) #MX2448G section; 24" W x 48" L x 4-tier high.

2. Four (4) #MX63UP polymer posts, 63" high.

3. Two (2) #5MPX polyurethane swivel casters with bumpers.

4. Two (2) #5MPBX polyurethane swivel casters with brakes and bumpers.

5. Plastic wedge lock connectors, quantity as required.

6. Locate bottom shelf @ 12" A.F.F.; space remaining shelves equally.

7. Accessories:
    -- Two (2) #MTR2448XE tray drying racks.
    -- Ten (10) #MXD24-8 shelf dividers.

ITEM #C65: MOP SINK & RACK -- (N.I.K.E.C. - SPECIFIED BY PLUMBING DIVISION)

QUANTITY: One (1)

ITEM #C66: WASHER/DRYER -- (N.I.C. – FURNISHED BY OWNER)

QUANTITY: One (1)

ITEM #C67: HAND SINK

QUANTITY: One (1)
MANUFACTURER: Eagle Foodservice Equipment Co., Inc.
MODEL NO.: HSAP-14-ADA-FE-B (N058)
PERTINENT DATA: Wall-Mounted Special Purpose - Hands Free ADA Type
UTILITIES REQ'D: 1/2" HW, 1/2" CW, 1-1/2" W
ALTERNATE MFRS.: None

Furnish and set-in-place per Equipment Plan, Sheet QF-111; Manufacturer's Instructions and the following:

1. Physically challenged unit furnished complete with splash mounted battery-powered electronic-eye faucet with low battery indicator light, basket drain, front loading C-fold paper towel dispenser, deck-mounted soap dispenser, stainless steel skirt and stainless steel wall brackets.

2. Accessories:
   -- Left and right end splashes.
   -- One (1) #326015 temperature adjustment valve.
   -- One (1) #326696 anti-scald valve.

ITEM #C68: BLENDER

QUANTITY: One (1)
MANUFACTURER: Robot Coupe
MODEL NO.: Blixer 4 (N058)
PERTINENT DATA: Single Speed, With Stainless Steel 4.5 Qt. Bowl and Twin Blade Assembly
UTILITIES REQ'D: 1.5HP, 120V, 1PH
ALTERNATE MFRS.: None

Furnish and set-in-place per Equipment Plan, Sheet QF-111; Manufacturer's Instructions and the following:

1. Cord and plug set.

ITEM #C69: MENU BOARD -- (N.I.C. – FURNISHED BY OWNER)

QUANTITY: One (1)

ITEM #C70: PAN RACK CART, MOBILE

QUANTITY: Two (2)
MANUFACTURER: Cres-Cor
MODEL NO.: 207-UA-13A (N058)
PERTINENT DATA: Universal Angles, Channel Posts, (18) 22x20 Pan Capacity
UTILITIES REQ'D: ----
ALTERNATE MFRS.: Lakeside, InterMetro

Furnish and set-in-place per Equipment Plan, Sheet QF-111; Manufacturer's Instructions and the following:

1. Full perimeter non-marking wrap-around vinyl bumper.

CAFETERIA KITCHEN

ITEM #1: WALK-IN COOLER

QUANTITY: One (1)
MANUFACTURER: Thermo-Kool
MODEL NO.: Indoor Installation (N058)
PERTINENT DATA: 4" Thick Durathane Construction - Class I; NSF Construction
UTILITIES REQ'D: 1750W, 120V, 1PH; 3/4" IW
ALTERNATE MFRS.: Master-Bilt; ThermalRite

Furnish and set-in-place per Equipment Plan, Sheet QF-121; Building Conditions Plan, Sheets QF-123 and QF-124; Manufacturer's Shop Drawing and the following:

1. One Section Unit: 34'-7" L x 18'-3½" W x 8'-6" H.

2. Exterior Finish:
   -- 26 GA stucco embossed galvanized steel where unexposed.
   -- 20 GA stucco embossed stainless steel where exposed.

3. Interior Finish:
   -- White acrylic enamel baked-on .040 stucco embossed aluminum walls.
   -- White acrylic enamel baked on 26 GA smooth galvanized steel ceiling.

4. Interior Floor:
   -- 4" prefabricated floor panels installed in 6" deep floor recess over hot asphalt paper or 6 MIL polyethylene sheets on building floor slab per Detail, Sheet QF-124.
   -- 2" setting bed with two (2) layers of wire reinforcing mesh fabric and epoxy floor material with 6" high integral coved base, both interior and exterior of box, installed over prefabricated floor panel by Flooring Contractor.

5. Entrance Door:
   -- Two (2) flush-mounted, self-closing doors with 34" x 76" net opening, hinged per Equipment Plan.
   -- Polished chrome camlift hinges with lift-off capability. One (1) extra hinge per door, three (3) total.

ITEM #1: (Continued)

- -- Kason #1236 polished chrome lever-action handle with knob-turn release and cylinder lock.
- -- Kason #09440004 polished chrome mortise dead-bolt lock, factory mounted.
- -- Hydraulic door closer.
- -- Standard 2" diameter dial indicating thermometer factory mounted.
- -- Pilot light and switch assembly factory mounted in door frame with stainless steel coverplate.
- -- 36" high aluminum diamond tread kickplates, interior and exterior of door, frame and jamb.
- -- 14" x 24" heated observation window.
- -- Undercut doors for epoxy floor.
- -- Foot treadle door opener.
- -- Kason #1806 LED light fixture with high-impact plastic cover centered over door opening to avoid conflict with shelving. Extend wiring in conduit, foamed within door panel header, to junction box mounted on top of walk-in ceiling, each compartment.
- -- Kason #907 interior door handle, factory mounted, with concealed metal backing plate.
- -- Round vinyl door bumper mounted to front exterior face to protect handle from puncturing wall when door in full open position.
- -- Engraved phenolic plastic compartment sign - 12" long x 2" high; white in color with 1" high blue CAPITAL letters mounted on the door above observation window; (1) - COOLER
- -- 12-gauge heavy-duty tainless steel heated threshold.
- -- Reinforced door panel for air-screen door.

6. Six (6) Kason #1810L21248LB 48" long LED light fixtures with shatter-proof high impact plastic covers centrally-mounted to walk-in ceiling per Detail, Sheet QF-127. Fixtures to be shipped loose and mounted by K.E.C. Final connection by Electrical Contractor.

7. Modularm Model #75LC recessed flush-mount digital thermometer with audio-visual temperature alarm factory mounted in door frames for both cooler compartment inter-wired with building monitoring system by Electrical Contractor, as required. Extend temperature probe to rear wall of each compartment.

8. Provide and install trim strips of matching exterior finish between ends of walk-in panels and building walls from finish floor to 6" above finish ceiling; verify finished ceiling height.

9. Provide and install closure panels of matching exterior finish between top of walk-in and finish ceiling per Detail Sheet QF-124; K.E.C. to verify finished ceiling height.

10. All electrical conduit shall be run concealed above walk-in ceiling, per Detail Sheet QF-127.

11. Evaporator coil drain lines shall be run to floor drain with "P"-trap on exterior of box by K.E.C. Pitch drain lines 1" per foot of horizontal run.

12. Black flexible "Armaflex" insulation applied to exposed drain lines and fittings within interior of box by K.E.C.

13. Coordinate location of sprinkler head drops and provide penetrations, where necessary.

14. Seal and insulate all openings to prevent infiltration of warm air into cooler compartment.

15. Provide access for Item #79: Refrigerated Display Merchandiser with rear access doors. Stainless steel closure trims, on all four (4) sides, to be provided between walk-in box and Item #79.

ITEM #1: (Continued)

16. K.E.C. to provide 16-gauge column wrapat DK/D14 column.

17. Accessories:
    - -- Two (2) Mars Air LoPro #LPN36-IU air door curtains with optional on/off microswitch. Electrical Contractor to provide power receptacle and final connection. Center fan over each entrance door opening and attach to wall panel with thru-bolts.
    - -- #16 ga. stainless steel hat-channel bumper rail with closed ends installed to front face and exposed side of walk-in, full-length, mounted @ 36" A.F.F. Provide 1/8" diamond tread kickplates from top of finish floor coved base to bottom of bumper rail. Align bumper rail with 36" high aluminum kickplate on doors.
    - -- One (1) #TK26BCF-2 blast chiller/shock freezer cabinet & uniframe evaporator only, 208V/60/1PH, 15 amps with rear door for pass through operation with SD card and label printer for complete HACCP documentation, thaw cycle, 13 pan stainless steel mobile rack.
    - -- Factory supervision of installation and start-up including training.

18. Quality Inspection Requirement:
    - -- Walk-In shall be completely erected at the manufacturer’s facility prior to shipment and a quality control inspection performed on the assembled structure. A digital photograph of factory assembled walk-in shall be provided for the K.E.C. permanent records and included in the operation and maintenance manuals.

ITEM #2: WALK-IN FREEZER

QUANTITY:	One (1)
MANUFACTURER:	Thermo-Kool
MODEL NO.:	Indoor Installation (N058)
PERTINENT DATA:	4" Thick Durathane Construction - Class I; NSF Construction
UTILITIES REQ'D:	1750W, 120V, 1PH; 3/4" IW
ALTERNATE MFRS.:	Master-Bilt; ThermalRite

Furnish and set-in-place per Equipment Plan, Sheet QF-121; Building Conditions Plan, Sheets QF-123 and QF-124; Manufacturer's Shop Drawing and the following:

1. One Section Unit: 32'-8" L x 17'-4" W x 8'-6" H.

2. Exterior Finish:
    - -- 26 GA stucco embossed galvanized steel where unexposed.
    - -- 20 GA stucco embossed stainless steel where exposed.

3. Interior Finish:
    - -- White acrylic enamel baked-on .040 stucco embossed aluminum walls.
    - -- White acrylic enamel baked on 26 GA smooth galvanized steel ceiling.

4. Interior Floor:
    - -- 4" prefabricated floor panels installed in 6" deep floor recess over hot asphalt paper or 6 MIL polyethylene sheets on building floor slab per Detail, Sheet QF-124.

ITEM #2: (Continued)

-- 2" setting bed with two (2) layers of wire reinforcing mesh fabric and epoxy floor material with 6" high integral coved base, both interior and exterior of box, installed over prefabricated floor panel by Flooring Contractor.

5. Entrance Door:
   - -- One (1) flush-mounted, self-closing door with 34" x 76" net opening, hinged per Equipment Plan.
   - -- Polished chrome camlift hinges with lift-off capability. One (1) extra hinge per door, three (3) total.
   - -- Kason #1236 polished chrome lever-action handle with knob-turn release and cylinder lock.
   - -- Kason #09440004 polished chrome mortise dead-bolt lock, factory mounted.
   - -- Hydraulic door closer.
   - -- Standard 2" diameter dial indicating thermometer factory mounted.
   - -- Pilot light and switch assembly factory mounted in door frame with stainless steel coverplate.
   - -- 36" high aluminum diamond tread kickplates, interior and exterior of door, frame and jamb.
   - -- 14" x 24" heated observation window.
   - -- Undercut doors for epoxy floor.
   - -- Foot treadle door opener.
   - -- Kason #1806 LED light fixture with high-impact plastic cover centered over door opening to avoid conflict with shelving, each compartment. Extend wiring in conduit, foamed within door panel header, to junction box mounted on top of walk-in ceiling.
   - -- Kason #907 interior door handle, factory mounted, with concealed metal backing plate.
   - -- Round vinyl door bumper mounted to front exterior face to protect handle from puncturing wall when door in full open position.
   - -- Engraved phenolic plastic compartment sign - 12" long x 2" high; white in color with 1" high blue CAPITAL letters mounted on each door above observation window; (1) - FREEZER.
   - -- 12-gauge heavy-duty tainless steel heated threshold, each compartment.
   - -- Reinforced door panel for air-screen door.

6. Heated pressure relief port in freezer.

7. Six (6) Kason #1810L21248LB 48" long LED light fixtures with shatter-proof high impact plastic covers centrally-mounted to walk-in ceiling per Detail, Sheet QF-127. Fixtures to be shipped loose and mounted by K.E.C. Final connection by Electrical Contractor.

8. Modularm Model #75LC recessed flush-mount digital thermometer with audio-visual temperature alarm factory mounted in door frames for freezer compartment inter-wired with building monitoring system by Electrical Contractor, as required. Extend temperature probe to rear wall of each compartment.

9. Provide and install trim strips of matching exterior finish between ends of walk-in panels and building walls from finish floor to 6" above finish ceiling; verify finished ceiling height.

10. Provide and install closure panels of matching exterior finish between top of walk-in and finish ceiling per Detail Sheet QF-124; K.E.C. to verify finished ceiling height.

11. All electrical conduit shall be run concealed above walk-in ceiling, per Detail Sheet QF-127.

ITEM #2: (Continued)

12. Evaporator coil drain lines shall be run to floor drain with "P"-trap on exterior of box by K.E.C. Pitch drain lines 1" per foot of horizontal run.

13. Black flexible "Armaflex" insulation applied to exposed drain lines and fittings within interior of box by K.E.C.

14. Spiral heat tape applied to drain line within interior of freezer compartment prior to application of insulation by K.E.C. Drain line heating cable shall be installed for continuous 24-hour operation.

15. Coordinate location of sprinkler head drops and provide penetrations, where necessary.

16. Seal and insulate all openings to prevent infiltration of warm air into freezer compartment.

17. Accessories:
    - -- One (1) Mars Air LoPro #LPN36-IU air door curtain with optional on/off microswitch. Electrical Contractor to provide power receptacle and final connection. Center fan over entrance door opening and attach to wall panel with thru-bolts.
    - -- #16 ga. stainless steel hat-channel bumper rail with closed ends installed to front face of walk-in, full-length, mounted @ 36" A.F.F. Provide 1/8" diamond tread kickplates from top of finish floor coved base to bottom of bumper rail. Align bumper rail with 36" high aluminum kickplate on doors.

18. Quality Inspection Requirement:
    - -- Walk-In shall be completely erected at the manufacturer’s facility prior to shipment and a quality control inspection performed on the assembled structure. A digital photograph of factory assembled walk-in shall be provided for the K.E.C. permanent records and included in the operation and maintenance manuals.

ITEM #3: REFRIGERATION SYSTEM

QUANTITY:	One (1)
MANUFACTURER:	ColdZone
MODEL NO.:	ET-4H (N058)
PERTINENT DATA:	Air-Cooled, Outdoor Installation, Remote, With Surveillant Demand Defrost Evaporator Control
UTILITIES REQ'D:	103.2A, 208V, 3PH
ALTERNATE MFRS.:	Bohn; Omni-Temp

Furnish and set-in-place per Equipment Plan, Sheet QF-121; Building Conditions Plan, Sheets QF-123 and QF-124; Manufacturer's Shop Drawing and the following:

1. One (1) pre-engineered system including condensing units, evaporator coils, and all required piping, valves and accessories.

2. Air-cooled system designed and sized for year-round outdoor operation in Townsend, Delaware.

3. System located outdoors on roof. Curb with pitch-pocket furnished and installed by General Contractor.

ITEM #3: (Continued)

4. Overall size: 142" long x 61½" wide x 72" high weighing 3,378 lbs. with installation clearance of 3'-0" on all sides.

5. The system shall be housed in a single, compact rust-proof cabinet and utilize a multi-circuited air-cooled condenser design. Side panels and base shall be comprised of 18 and 14 gauge all welded steel, respectively, with 16 gauge top. Entire frame shall be pre-assembled, fully welded, cleaned structural steel painted with a prime coat of zinc chromate and shall be finished with two (2) coats of Grey and one (1) coat of clear epoxy-based "Enviro-Kote."

6. Hot air discharge from condenser fans shall be vertical. Fan motors shall be not less than 1/2 HP with a venturi-contoured air scoop furnished for each fan to reduce air turbulence and fan loading. Fans shall be equipped with thermal sensing controls mounted inside the control panel designed to operate the minimum number of fans required for adequate air flow under varying ambient conditions. Fan blades shall be not less than 20" in diameter and protected with a plastic coated fan guard.

7. Unit shall be provided with semi-hermetic compressors; Copeland 7HP Model 3DS3F46KE for the Freezer; Copeland 5HP Model ZS38K4E for the Cooler, Copeland 1.8HP Model ZS13KAE for Item #79: Refrigerated Display Case and Copeland 3.0HP Model 2CES-3 for the Blast Chiller. Each unit shall be equipped with hi-low pressure control, liquid line dryer, sight glass, suction and discharge vibration eliminator, head pressure control, and crankcase heaters, all factory assembled.

8. All compressor units shall be new and factory assembled to operate with CFC-free refrigerants; R-407A shall be used for medium and low-temperature applications.

9. Each compressor shall be equipped with an oversized receiver. Such receivers shall be equipped individually with a fusible plug, as well as installed king and queen valves equipped with service ports. Each receiver shall have a pump down capacity large enough to accept the total liquid volume of refrigerant in the system without exceeding 80% of the volumetric capacity at the designed operating pressure and temperature.

10. Unit shall be provided with a 15° TD air-cooled condenser coil with staggered tube design for greater thermal efficiency. The coil shall be tested to 400 PSI and shall be self-draining to assure efficient operation and proper oil return. The condenser fan motor shall be inherently protected and have life-lubricated bearings. A fan guard shall be provided with each motor. Liquid receiver shall conform to UL or ASME codes and bear the appropriate label or stamp.

11. All refrigerant lines shall be extended to one side of the package in a neat and orderly manner for connection to refrigerant lines penetrating thru building exterior wall.

12. All tubing shall be securely supported and anchored with clamps.

13. All copper tubing to be refrigerant grade A.C.R. or type L.

14. Silver solder and/or Sil-fos shall be used for all refrigerant piping. Soft solder is not acceptable.

15. All piping to be pressure tested with nitrogen at 300 psi. After the condensing unit and coil have been connected, balance of the system shall be leak-tested with valves open.

ITEM #3: (Continued)

16. The package system shall have a factory mounted and pre-wired control panel complete with main fused disconnect switch, compressor circuit breakers, contactors, and time clocks wired for single power connection.

17. Electrical Contractor shall provide and install power lines to the control panel, and provide wiring for control and defrost heater between the defrost clock and the refrigeration fixtures, all in accordance with the wiring diagram and local codes.

18. The complete system shall be evacuated with a vacuum pump.

19. K.E.C. shall charge, test, and adjust each unit to be in an operational system.

20. Refrigeration Contractor and/or K.E.C. to provide and install drain line heater in freezer.

21. Evaporator Coil with High-Efficiency EC Motors-- Walk-In Freezer: Two (2) Low-Profile, End-Mount Type, Model CL6E162DDAB; 4.0A, 208V, 1PH (Fan); 38.4A, 208V, 1PH (Defrost Heater)
    -- System to operate at -10° F.
    -- Furnished complete with thermostat, solenoid, and expansion valves factory mounted ready for final connection by Refrigeration Contractor.

22. Evaporator Coil with High-Efficiency EC Motors-- Walk-In Cooler: Two (2) Low-Profile, End-Mount Type, Model CL6A181ADAB, 4.8A, 120V, 1PH
    -- System to operate at +35° F.
    -- Furnished complete with thermostat, solenoid, and expansion valves factory mounted ready for final connection by Refrigeration Contractor.

23. Systems marked in sequence shall be a factory package refrigeration system UL approved.

24. K.E.C. shall guarantee all items in the Packaged Refrigeration System against defects, including all parts and labor for two (2) years. The guarantee is to commence on the day installation is made operational. All repairs and replacements necessary during this period shall be affected at the K.E.C.'s expense on a 24-hour, 7-day a week basis, including emergency service. An emergency service telephone number shall be conspicuously posted in the foodservice office.

25. During the 2-year period, it shall be the K.E.C.'s responsibility to provide all necessary preventive maintenance to protect the interest of all concerned. This shall embrace all components and the performance of the system including coils, valves, controls, etc. furnished with the refrigeration equipment.

26. Provide a 5-year extended factory warranty on all compressors.

27. Provide any required instruction to Plumbing and/or Electrical Contractors for services or related work, as well as, specifications for the preparation of joinings, connections, and materials to be used to the General Contractor.

ITEM #3: (Continued)

28. Provide, for record and reference, as-built diagram of piping systems showing actual locations, components, system identification, and refrigerated equipment on each system. As-built diagram shall be provided in laminated plastic form and shall be conspicuously located in the Engineer's Office. Actual refrigeration system components shall be tagged in a permanent manner to match the as-built diagram.

29. Installation drawings and manufacturer's specification sheets shall be submitted to the architect/owner for approval prior to commencing work. Drawings shall include refrigeration piping showing actual line sizes and system allocation, evaporators, compressors, condensers, and all required valves and accessories. Local fire code may require that fiberglass insulation be provided. Such insulation procedure shall be by the General Contractor.

30. Provide testing and charging of the entire system per the Foodservice General Specifications, Electrical and Mechanical Requirements.

31. Commissioning services shall be performed by factory authorized representative. Report to be provided to the Consultant once completed.

ITEM #4: WEIGHING SCALE

QUANTITY:	One (1)
MANUFACTURER:	Edlund Company, Inc.
MODEL NO.:	EDL-10 OP (N058)
PERTINENT DATA:	Countertop, Multi-Function, Oversized Platform, With Built-In Rechargeable Battery Pack
UTILITIES REQ'D:	2.0A, 120V, 1PH
ALTERNATE MFRS.:	None

Furnish and set-in-place per Equipment Plan, Sheet QF-121 and Manufacturer's Instructions.

ITEM #5: DUNNAGE RACK, MOBILE

QUANTITY:	Seven (7)
MANUFACTURER:	InterMetro Industries Corporation
MODEL NO.:	MetroMax i (N058)
PERTINENT DATA:	Open-Grid Shelf Mat, Heavy-Duty, Metroseal 3™ Epoxy-Coated
UTILITIES REQ'D:	----
ALTERNATE MFRS.:	None

Furnish and set-in-place per Equipment Plan, Sheet QF-121; Manufacturer's Instructions and the following:

<u>Cooler</u>:

1. Three (3) #MHP35K3 units; 18" W x 48" L.

ITEM #5: (Continued)

Freezer:

1. Two (2) #MHP33K3 units; 18" W x 48" L.

Dry Storage:

1. Two (2) #MHP33K3 units; 18" W x 48" L.

ITEM #6: SHELVING, MOBILE

QUANTITY:	Fifty (50)
MANUFACTURER:	InterMetro Industries Corporation
MODEL NO.:	MetroMaxQ (N058)
PERTINENT DATA:	Four-Tier High, Free-Standing, Polymer
UTILITIES REQ'D:	----
ALTERNATE MFRS.:	None

Furnish and set-in-place per Equipment Plan, Sheet QF-121; Manufacturer's Instructions and the following:

Cooler:

1. Twenty-three (23) #MQ2442G sections; 24" W x 42" L x 4-tier high.

2. Ninety-two (92) #MQ63UPE posts for stem casters, 63" high.

3. Forty-six (46) #5MPX polyurethane swivel casters with bumpers.

4. Forty-six (46) #5MPBX polyurethane swivel casters with brakes and bumpers.

5. Plastic wedge lock connectors, quantity as required.

6. Locate bottom shelf @ 12" A.F.F.; space remaining shelves equally.

Freezer:

1. One (1) #MQ2442G section; 24" W x 42" L x 4-tier high.

2. Twenty-six (26) #MQ2448G sections; 24" W x 48" L x 4-tier high.

3. One Hundred Eight (108) #MQ63UPE posts for stem casters, 63" high.

4. Fifty-four (54) #5MPX polyurethane swivel casters with bumpers.

5. Fifty-four (54) #5MPBX polyurethane swivel casters with brakes and bumpers.

6. Plastic wedge lock connectors, quantity as required.

ITEM #6: (Continued)

7. Locate bottom shelf @ 12" A.F.F.; space remaining shelves equally.

ITEM #7: WATER FILTRATION SYSTEM

QUANTITY: One
MANUFACTURER: OptiPure
MODEL NO.: BWS1500/175 HF (N058)
PERTINENT DATA: Blended Water Reverse Osmosis System
UTILITIES REQ'D: 6.0A, 120V, 1PH (Processor), 8.0A, 120V, 1PH (RC Pump); 3/4" HW, 3/4" CW; ½" IW
ALTERNATE MFRS.: None

Furnish and install per Equipment Plan, Sheet QF-121; Plumbing Rough-In Plan, QF-125, Manufacturer's Instructions and the following:

1. Complete water filter system with 175 gallon atmospheric storage tank with top-mounted variable high flow repressurization system (3/4 hp) and sub-micron hydrophobic air breather, sample port, 3/8" connection, up to 1500 gpd, Smartpump, combines RO water and filtered water, operates at line pressure, includes required hose, tubing and fittings, precision blending valve, dual-read digital TDS meter, sample port, built-in pressure gauge, adjustable reject flow control valve, integrated system bypass valve located in Room D015C.

2. Mount water filter assembly to wall with bottom of filter @ 6'-0" A.F.F.

3. Unit furnished by K.E.C.; piping above ceiling and final connection by Plumbing Contractor per Detail, QF-125.

4. Approved backflow preventor furnished and installed by Plumbing Contractor.

5. Accessories:
   -- One (1) #OS.29 OptiSoft Water Softening System, 11.4 gpm, 18,300 grain capacity, 77 lb. salt capacity, used for ware washing equipment, tea brewers & coffee brewers, reduces calcium & magnesium, integrated bypass, (2) 24" long stainless steel flex connectors, for use with hot or cold water, supplied with transformer, 3/4" NPT female, 120v/60/1-ph.

ITEM #8: SHELVING, MOBILE

QUANTITY: Twenty-Five (25)
MANUFACTURER: InterMetro Industries Corporation
MODEL NO.: MetroMaxQ (N058)
PERTINENT DATA: Five-Tier High, Free-Standing, Polymer
UTILITIES REQ'D: ----
ALTERNATE MFRS.: None

Furnish and set-in-place per Equipment Plan, Sheet QF-121; Manufacturer's Instructions and the following:

ITEM #8: (Continued)

Dry Storage:

1. Twenty-five (25) #MQ2448G sections; 24" W x 48" L x 5-tier high.

2. One-hundred (100) #MQ74UPE posts for stem casters, 74-5/8" high.

3. Fifty (50) #5MPX polyurethane swivel casters with bumpers.

4. Fifty (50) #5MPBX polyurethane swivel casters with brakes and bumpers.

5. Plastic wedge lock connectors, quantity as required.

6. Locate bottom shelf @ 12" A.F.F.; space remaining shelves equally.

ITEM #9: PAN RACK CART, MOBILE

QUANTITY: Twelve (12)
MANUFACTURER: Cres-Cor
MODEL NO.: 207-UA-13A (N058)
PERTINENT DATA: Universal Angles, Channel Posts, (18) 22x20 Pan Capacity
UTILITIES REQ'D: ----
ALTERNATE MFRS.: Lakeside, InterMetro

Furnish and set-in-place per Equipment Plan, Sheet QF-121; Manufacturer's Instructions and the following:

1. Full perimeter non-marking wrap-around vinyl bumper.

ITEM #10: PREP SINK

QUANTITY: Two (2)
MANUFACTURER: Custom Fabricated
MODEL NO: #14 GA Stainless Steel
PERTINENT DATA: 9'-0" Long x 2'-6" Wide x 2'-10" High
UTILITIES REQ'D: 1/2" HW, 1/2" CW, (2) 1-1/2" IW
ALTERNATE MFRS.: None

Fabricate and set-in-place per Equipment Plan, Sheet QF-121; Fabrication Detail, Sheet QF-501; and the following:

1. Front and end edge rolls per Detail 1.02B.

2. 13" high back and partial end splash per Detail 1.04A, with finished back.

3. Framework per Detail 1.05.

4. Legs per Detail 1.07. Flanged feet on each corner leg.

ITEM #10: (Continued)

5. Stainless steel undershelf on both ends per Detail 1.11.

6. Sound-deaden underside of sinks and drainboards with NSF-approved sound dampening material.

7. Accessories:
   -- One (1) T&S #B-0133-ADF-12 pre-rinse spray faucet with 12" swing-spout add-on faucet, 6" wall bracket and backflow preventer.
   -- Two (2) T&S #B-3950-01 twist waste valves with overflow assemblies and #010387-45 basket strainers.

8. Item will remain shrink-wrapped until ready for final connection by Plumbing Contractor. Immediately following completion of final connections, K.E.C. shall re-shrink-wrap tubs or provide removable panel to avoid use by construction trades. Post sign on wall above sink tubs in English and Spanish stating: WARNING! NOT TO BE USED BY CONSTRUCTION TRADES. FAILURE TO COMPLY WILL RESULT IN $500.00 FINE AND ALL COSTS TO REPLACE ITEM WITH NEW.

ITEM #11: HAND SINK

QUANTITY: Thirteen (13)
MANUFACTURER: Eagle Foodservice Equipment Company
MODEL NO.: HSA-10-FAW-LRS (N058)
PERTINENT DATA: Wall Mounted, Wrist Action Faucet
UTILITIES REQ'D: 1/2" HW, 1/2" CW, 1-1/2" W
ALTERNATE MFRS.: Advance/Tabco

Furnish and set-in-place per Equipment Plan, Sheets QF-121 and QF-122; Manufacturer's Instructions and the following:

1. Complete sink assembly consisting of: gooseneck faucet, p-trap, tailpiece and basket drain.

2. Accessories:
   -- #606215 skirt assembly, each unit.
   -- Integral right and left stainless steel splash shield, each unit.

ITEM #12: SOAP & TOWEL DISPENSER -- (N.I.K.E.C. – SPECIFIED BY VENDOR)

QUANTITY: Thirteen (13)

ITEM #13: WORKTABLE

QUANTITY: Four (4)
MANUFACTURER: Custom Fabricated
MODEL NO.: #14 GA Stainless Steel
PERTINENT DATA: 9'-0" Long x 2'-6" Wide x 3'-0" High
UTILITIES REQ'D: ----
ALTERNATE MFRS.: None

Fabricate and set-in-place per Equipment Plan, Sheet QF-121; Fabrication Detail, Sheet QF-501; and the following:

1. Perimeter edge rolls per Detail 1.02.1M.

2. Framework per Detail 1.05.

3. Legs per Detail 1.07.

4. Stainless steel undershelf per Detail 1.11.

5. Two (2) stainless steel drawer assemblies per Detail 1.14, Type I with locks.

6. Worktable per Detail 2.01.

7. Sound-deaden underside of tabletop with NSF-approved sound dampening material.

8. Accessories:
   -- One (1) Edlund #S-11C manual can opener.

ITEM #14: RETRACTABLE CORD REEL

QUANTITY: Twenty (20)
MANUFACTURER: APC Group Inc.
MODEL NO.: Kitchen Leash (N058)
PERTINENT DATA: Ceiling-Mounted, With Adjustable Stop, Non-GFI Receptacle
UTILITIES REQ'D: 20.0A, 120V, 1PH
ALTERNATE MFRS.: None

Furnish and install per Equipment Plan, Sheets QF-121 and QF-122; Manufacturer's Instructions and the following:

1. Electrical Contractor to furnish and install GFCI type breaker at kitchen electrical panel board.

ITEM #15: HAND SINK

QUANTITY: One (1)
MANUFACTURER: Eagle Foodservice Equipment Co., Inc.
MODEL NO.: HSAP-14-ADA-FE-B (N058)
PERTINENT DATA: Wall-Mounted Special Purpose - Hands Free ADA Type
UTILITIES REQ'D: 1/2" HW, 1/2" CW, 1-1/2" W
ALTERNATE MFRS.: None

Furnish and set-in-place per Equipment Plan, Sheet QF-121; Manufacturer's Instructions and the following:

1. Physically challenged unit furnished complete with splash mounted battery-powered electronic-eye faucet with low battery indicator light, basket drain, front loading C-fold paper towel dispenser, deck-mounted soap dispenser, stainless steel skirt and stainless steel wall brackets.

2. Accessories:
   -- Left and right end splashes.
   -- One (1) #326015 temperature adjustment valve.
   -- One (1) #326696 anti-scald valve.

ITEM #16: DISPOSER

QUANTITY: One (1)
MANUFACTURER: In-Sink-Erator
MODEL NO.: SS-200-7-MRS (N058)
PERTINENT DATA: #7 Collar Adapter Assembly
UTILITIES REQ'D: 2.0 HP, 480V, 3PH; 1/2" CW, 2" W
ALTERNATE MFRS.: Salvajor

Furnish and install per Equipment Plan, Sheet QF-122; Manufacturer's Instructions and the following:

1. Manual reverse switch mounted on 14 GA stainless steel bracket.

2. Weld No. 7 collar adapter to underside of pre-rinse sink, Item #89.

3. Accessories:
   -- One (1) T&S Model #B-455 vacuum breaker in lieu of standard unit.

ITEM #17: WORKTABLE

QUANTITY: Two (2)
MANUFACTURER: Custom Fabricated
MODEL NO.: #14 GA Stainless Steel
PERTINENT DATA: 7'-0" Long x 2'-6" Wide x 3'-0" High
UTILITIES REQ'D: ----
ALTERNATE MFRS.: None

ITEM #17: (Continued)

Fabricate and set-in-place per Equipment Plan, Sheet QF-121; Fabrication Detail, Sheet QF-501; and the following:

1. Perimeter edge rolls per Detail 1.02.1M.

2. Framework per Detail 1.05.

3. Legs per Detail 1.07.

4. Stainless steel undershelf per Detail 1.11.

5. Two (2) stainless steel drawer assemblies per Detail 1.14, Type I with locks.

6. Worktable per Detail 2.01.

7. Sound-deaden underside of tabletop with NSF-approved sound dampening material.

ITEM #18: WORKTABLE WITH SINK

QUANTITY:	Two (2)
MANUFACTURER:	Custom Fabricated
MODEL NO.:	#14 GA Stainless Steel
PERTINENT DATA:	7'-0" Long x 2'-6" Wide x 3'-0" High
UTILITIES REQ'D:	1/2" HW, 1/2" CW, 1-1/2" IW
ALTERNATE MFRS.:	None

Fabricate and set-in-place per Equipment Plan, Sheet QF-121; Fabrication Detail, Sheet QF-501, and the following:

1. Perimeter edge rolls per Detail 1.02M.

2. Framework per Detail 1.05.

3. Legs per Detail 1.07. Flanged feet on each corner leg.

4. Stainless steel undershelf per Detail 1.11.

5. Two (2) stainless steel drawer assemblies per Detail 1.14, Type I with locks.

6. Full-length table-mounted, double-sided utensil rack per Detail 1.18B.

7. Worktable per Detail 2.01.

8. 15" x 18 " x 8" deep utility sink per Detail 3.04 with stainless steel waste lever angle bracket fully welded to underside of sink.

9. Sound-deaden underside of tabletop and sink with NSF-approved sound dampening material.

ITEM #18: (Continued)

10. Accessories:
    -- One (1) T&S #B-325 deck-mounted swing-spout gooseneck faucet with #B-199-2 aerator.

ITEM #19: UTILITY RACEWAY

QUANTITY:	One (1)
MANUFACTURER:	Captive-Aire Systems, Inc.
MODEL NO.:	UDI (N058)
PERTINENT DATA:	Island
UTILITIES REQ'D:	100.0A, 120/208V, 3PH; 3/4"HW, 3/4"CW; 2" Natural Gas @ 2,350MBH (Looped Service)
ALTERNATE MFRS.:	Avtec; Gaylord

Furnish and install per Equipment Plan, Sheet QF-121; Utility Raceway Details, Sheet QF-504; Manufacturer's Shop Drawing and the following:

1. All components and labor necessary for a complete system manufactured in accordance with NEC latest edition, NEMA, NFPA No. 96 and No. 54, Uniform Plumbing Code, ASME, OSHA using only U.L. Listed certified components.

2. 23'-0" long x 12" wide x 6'-8" high with risers, completely pre-wired and pre-plumbed to one final connection point for gas, hot water, cold water and electric services. All connections shall face down on horizontal member.

3. System shall extend up to bottom edge of Ventilator, Item #20.

4. 5'-0" overall height less risers.

5. Risers to be mounted per Detail, Sheet QF-504.

6. Provide and install closure panels of matching exterior finish between top of riser and finish ceiling per Detail Sheet QF-504; K.E.C. to verify finished ceiling height.

7. Entire raceway shall be constructed of #16 gauge Type 304 stainless steel with a #4 mill finish.

8. Removable link plates constructed of #16 gauge stainless steel.

9. Electrical compartment shall be completely enclosed with stainless steel housing accessible by the removal of link plates. Internal electrical feeder shall be cable wireway having balanced load and phases and with connection lugs for main service. Branch circuit wiring for each electrical connection shall be phase identified and sized in accordance with circuit breaker rated capacity. Raceway shall provide gas and electrical services for items #21, #23, #24 and #25.

10. Provide 12" long interchangeable 16 gauge stainless steel link connection plate for each electrical connection equipped with individual circuit breaker(s) installed in breaker panel mounted in left-hand riser, and grounding type receptacle with twist-lock feature or pre-wired flexible sealtite conduit.

ITEM #19: (Continued)

11. On each connection plate provide U.L. listed GFIC ground fault interrupter circuits and matching power supply cords on each 120-volt single-phase connection.

12. Hot water and cold water plumbing compartment shall be isolated from electrical compartment. All piping and disconnects in system shall be color coded.

13. At each individual gas branch connection, provide 1/4-turn ball valve and 48" long Dormont PVC coated AGA and NSF approved flexible hose with SnapFast quick-disconnect device and double SwivelMAX gas connectors.

14. Provide fire/fuel shut-off for electric equipment per NFPA No. 96. System shall require one final connection by Contractor from fire protection system.

15. All hot and cold water piping, including individual branch pipe connection, shall be hard temper type "L" copper tubing with copper sweat type solder fittings. At each individual connection, provide A.G.A approved flexible hose(s) with two wall brass and stainless steel construction with quick-disconnect fittings.

16. Provide matching cord sets for all electric equipment, twenty (20) total.

17. Neoprene bumper strips, full length.

18. Provide each mobile piece of equipment with an A.G.A. recognized restraining device protecting respective gas disconnect assemblies and connectors.

19. Electronic gas solenoid valve factory installed at each in-coming gas service ready for final connection per local codes by Plumbing Contractor; inter-wired by Electrical Contractor.

20. Accessories:
    -- Provide one (1) independent pre-piped water line to service point for Item #23: Convection Steamer and Item #24: Convection Oven.
    -- Watts #LF7R dual check valves backflow preventer for each water drop.

21. Fabricated in four (4) sections, assembled in field to present integral one-piece appearance.

22. Main electrical shunt-type circuit breakers mounted in right-hand riser for 100A, 120/208V, 3PH service.

23. Factory System Design Verification (SDV) shall be performed after all inspections are complete. SDV report shall be available once completed.

24. Raceway shall be of same manufacturer as Ventilator, Item #20.

ITEM #20: VENTILATOR

QUANTITY:	One (1)
MANUFACTURER:	Captive-Aire Systems, Inc.
MODEL NO.:	6630-ND2-PSP-F (N058)
PERTINENT DATA:	Island, Back-To-Back Configuration, Captrate Solo Filter, Perforated Ceiling Make-up Air Plenum, With Fire Protection System
UTILITIES REQ'D:	7,975 CFM Exhaust/6,378 CFM Supply (Tempered); 350W, 120V, 1PH (Lights); 20A, 120V, 1PH, 24-Hour Dedicated Service (Fire Protection System)
ALTERNATE MFRS.:	Avtec; Gaylord

Furnish and install per Equipment Plan, Sheet QF-121; Ventilator Detail Drawing, Sheet QF-508; Manufacturer's Instructions and the following:

1. 5'-6" Wide x 22'-0" Long x 2'-6" High with bottom edge mounted at 6'-8" A.F.F. Length comprised of two (2) 11'-0" long sections, back-to-back. Entire unit constructed of 18 GA stainless steel with liquid tight all welded external continuous seams and joints per N.F.P.A. 96, U.L. and State of Delaware Codes.

2. Twelve (12) U.L. Listed, NSF-Approved, 12"x12" recessed LED light fixtures, three (3) equally spaced, each section. Bulbs furnished and installed by K.E.C.

3. Matching stainless steel perimeter closure panels to finished ceiling by K.E.C; verify ceiling height.

4. Surface fire protection system nozzles and piping to be factory installed, chrome plated or stainless steel where exposed, ready for final connections by fire protection system sub-contractor.

5. Hanger rods and support system from structure above by General Contractor. K.E.C. to coordinate method and location with other trades.

6. Stainless steel hanger brackets.

7. 12" wide stainless steel angle framing and closure panels @ rear to accommodate Utility Raceway.

8. Full-length, perforated stainless steel ceiling-mounted make-up air plenum with integral supply air balancing dampers for each hood section.

9. Semi-concealed internal sloped grease trough with removable s/s cup at each end.

10. Stainless steel U.L. Classified 20" captrate solo grease filters with hook.

11. Factory System Design Verification (SDV) shall be performed after all inspections are complete. SDV report shall be available once completed.

12. Ventilator shall be of same manufacturer as Utility Raceway, Item #19.

13. Accessories:
    - -- 12" wide utility cabinet mounted on right end with factory pre-piped Ansul R-102 fire suppression system and electrical pre-wire package #DCV-2111 with light and fan switches.
    - -- One (1) Ansul Model #K01-2 hand-held fire extinguisher, 1.6 gallon, wall-mounted.

ITEM #20: (Continued)

-- Fire protection system six-month and twelve-month inspections, servicing, and replacement of components as per NFPA-96 Latest Edition.

ITEM #21: TILTING KETTLE, 30-GALLON

QUANTITY: Two (2)
MANUFACTURER: Market Forge Industries, Inc.
MODEL NO.: FT-30GL (N058)
PERTINENT DATA: Quad-Leg Base, Self Contained, 2/3-Jacketed
UTILITIES REQ'D: 2.0A, 120V, 1PH; ½" HW, ½" CW, 2" IW; 1/2" Natural Gas @ 100 MBH
ALTERNATE MFRS.: None

Furnish and set-in-place per Equipment Plan, Sheet QF-121; Manufacturer's Instructions and the following:

1. Accessories (each unit):
   -- One (1) 2" tangent draw-off valve with perforated strainer.
   -- One (1) complete kettle accessory kit.
   -- One (1) pan support.
   -- One (1) kettle lip strainer.
   -- One (1) spring-assisted hinged stainless steel cover.
   -- One (1) condensate flange on kettle cover.
   -- One (1) measuring strip.
   -- One (1) # double pantry faucet with swing spout and bracket.

2. Mechanical and electrical services supplied through Utility Raceway, Item #19.

ITEM #22: FLOOR TROUGH

QUANTITY: Two (2)
MANUFACTURER: IMC Teddy Foodservice Corporation
MODEL NO.: ASFT-2436-SQ (N058)
PERTINENT DATA: Anti-Spill, 14 GA S/S
UTILITIES REQ'D: 4" W
ALTERNATE MFRS.: Gates; St. Louis Stainless

Furnish and install per Equipment Plan, Sheet QF-121; Manufacturer's Instructions and the following:

1. 3'-0" long x 2'-0" wide, constructed and installed per Detail, Sheet QF-124.

2. #SQAS-24 anti-slip serrated stainless steel subway style removable floor grate in equal sections, the lessor of 30 lbs. and/or 20" long.

3. Bottom of trough pitched to integral stainless steel waste cup with removable perforated stainless steel basket.

4. Top of trough installed flush with top of kitchen finished floor.

ITEM #22: (Continued)

5. Unit furnished by K.E.C.; installed by Plumbing Contractor.

ITEM #23: CONVECTION STEAMER

QUANTITY: Four (4)
MANUFACTURER: Market Forge
MODEL NO.: Sirius II-10 (N058)
PERTINENT DATA: Double Stacked, Stand-Mounted 5-Pan, Boilerless, Sirius Series
UTILITIES REQ'D: (2)8.0A, 120V, 1PH; (2) 3/4" CW, (2) 1" IW; (2)1/2" Natural Gas @ 27 MBH
ALTERNATE MFRS.: Blodgett

Furnish and set-in-place per Equipment Plan, Sheet QF-121; Manufacturer's Instructions and the following:

1. Accessories:
   -- Water filter system provided under Item #7.

2. Electrical and mechanical services supplied through Utility Raceway, Item #19.

ITEM #24: CONVECTION OVEN WITH HUMIDITY

QUANTITY: Five (5)
MANUFACTURER: Blodgett Oven Company, Inc.
MODEL NO.: HVH-100G-DOUBLE (N058)
PERTINENT DATA: Double Section, Standard Depth, HydroVection™ Oven With Helix Technology, SmartTouch™ Touchscreen Control With USB Port
UTILITIES REQ'D: (2)10.0A, 120V, 1PH; (2)¾" CW, (2)1" IW; (2)3/4" Natural Gas @ 60 MBH
ALTERNATE MFRS: None

Furnish and set-in-place per Equipment Plan, Sheet QF-121, Manufacturer's Instructions and the following:

1. Accessories:
   -- 11" adjustable legs with bullet feet.
   -- Stacking kit.
   -- Ten (10) multi-purpose fry pans.
   -- Five (5) additional stainless steel wire racks.
   -- Water pressure regulator, each compartment.
   -- Water filter system provided under Item #7.
   -- Cord set.

2. Approved backflow preventor furnished and installed by Plumbing Contractor.

3. Electrical and mechanical services supplied through Utility Raceway, Item #19.

ITEM #25: RANGE/OVEN, MOBILE

QUANTITY: One (1)
MANUFACTURER: Garland
MODEL NO.: MST43R-E (N058)
PERTINENT DATA: Heavy-Duty, Standard Oven Base, (6) Open Burners, Master Sentry Series, Electronic Ignition, Flame Failure Protection
UTILITIES REQ'D: 3.4A, 120V, 1PH; 1-1/4" Natural Gas @ 180MBH
ALTERNATE MFRS.: None

Furnish and set-in-place per Equipment Plan, Sheet QF-121; Manufacturer's Instructions and the following:

1. Accessories:
   -- Stainless steel front and both sides.
   -- 34" wide Model #M34LPBG, 10" low-profile backguard.
   -- ¾" rear gas connection. Cap and cover manifold ends.
   -- Four (4) heavy-duty 5" diameter polyurethane swivel casters, front two (2) with brakes.
   -- Pressure regulator.

2. Electrical and mechanical services supplied through Utility Raceway, Item #19.

ITEM #26: PASS-THRU HEATED CABINET, MOBILE

QUANTITY: Six (6)
MANUFACTURER: Victory
MODEL NO.: HS-1D-1-PT-HD (N058)
PERTINENT DATA: One-Section, Self-Contained, Stainless Steel Interior/Exterior
UTILITIES REQ'D: 6.3A, 208V, 1PH
ALTERNATE MFRS.: None

Furnish and set-in-place per Equipment Plan, Sheet QF-121; Manufacturer's Instructions and the following:

1. Half-height doors hinged per Equipment Plan, both sides. Glass doors on kitchen side, solid doors on serving side.

2. Cylinder door locks, keyed-alike.

3. Universal tray slide assembly installed on 5" centers in lieu of wire shelves, five (5) pair per compartment, ten (10) pair total, each unit.

4. Exterior mounted digital thermometer installed on kitchen side.

5. Plastic laminate finish factory applied to door fronts on serving side only, color as selected by Architect; K.E.C. to verify

6. 5" diameter heavy-duty swivel casters, two (2) with brakes.

7. Cord and plug set with matching receptacle furnished and installed by Electrical Contractor.

ITEM #27: PASS-THRU REFRIGERATOR, MOBILE

QUANTITY: Six (6)
MANUFACTURER: Victory
MODEL NO.: RS-2D-S1-PT-HD (N058)
PERTINENT DATA: Two-Section, Self-Contained, Stainless Steel Interior/Exterior
UTILITIES REQ'D: 10.7A, 120V, 1PH
ALTERNATE MFRS.: None

Furnish and set-in-place per Equipment Plan, Sheet QF-121; Manufacturer's Instructions and the following:

1. Half-height doors hinged per Equipment Plan, both sides. Glass doors on kitchen side, solid doors on serving side.

2. Cylinder door locks, keyed-alike.

3. Type A tray slide assembly for 18"x26" sheet pans with 2" spacing, each compartment.

4. Exterior mounted digital thermometer installed on kitchen side.

5. Plastic laminate finish factory applied to door fronts on serving side only, color as selected by Architect; K.E.C. to verify

6. 5" diameter heavy-duty swivel casters, two (2) with brakes.

7. Cord and plug set.

ITEM #28: HEATED SHELF

QUANTITY: One (1)
MANUFACTURER: Hatco Corporation
MODEL NO.: GRS-60-H (N058)
PERTINENT DATA: Thermostat Controlled, Free-Standing
UTILITIES REQ'D: 750W, 120V, 1PH
ALTERNATE MFR.: None

Furnish and set-in-place per Equipment Plan, Sheet QF-121; Manufacturer's Instructions and the following:

1. Cord and plug set.

ITEM #29: WORKCOUNTER

QUANTITY: Two (2)
MANUFACTURER: Custom Fabricated
MODEL NO.: #14 GA Stainless Steel
PERTINENT DATA: 6'-0" Long x 2'-6" Wide x 3'-0" High
UTILITIES REQ'D: ----
ALTERNATE MFR.: None

Fabricate and set-in-place per Equipment Plan, QF-121; Fabrication Detail, Sheet QF-501; and the following:

1. Perimeter edge rolls per Detail 1.02.1M.

2. Framework per Detail 1.06.

3. Heavy-duty counter legs per Detail 1.08.

4. Workcounter Detail 4.02.

5. Stainless steel solid hinged door per Detail 4.26 with plastic laminate finish.

6. Sound-deaden underside of countertop with NSF-approved sound dampening material.

ITEM #30: REFRIGERATED WORKTOP, MOBILE

QUANTITY: One (1)
MANUFACTURER: Victory
MODEL NO.: VWR60HC (N058)
PERTINENT DATA: Two Section, Self-Contained, Front-Breathing
UTILITIES REQ'D: 8.2A, 120V, 1PH
ALTERNATE MFRS.: None

Furnish and set-in-place per Equipment Plan, Sheet QF-121; Manufacturer's Instructions and the following:

1. Accessories:
   -- Cylinder door lock.
   -- 3" diameter swivel casters.
   -- Front doors with laminated finish; color as selected by Architect.

ITEM #31: EQUIPMENT STAND, MOBILE

QUANTITY: Two (2)
MANUFACTURER: Lincoln Impinger
MODEL NO.: 1127-1 (N058)
PERTINENT DATA: Stainless Steel Construction, With Casters
UTILITIES REQ'D: ----
ALTERNATE MFRS.: None

ITEM #31: (Continued)

Furnish and set-in-place per Equipment Plan, Sheet QF-121 and Manufacturer's Instructions.

ITEM #32: PIZZA OVEN

QUANTITY:	Two (2)
MANUFACTURER:	Lincoln Foodservice Products, LLC
MODEL NO.:	1180-FB2E (N058)
PERTINENT DATA:	Lincoln Impinger II, Conveyorized, Double-Stack, 56" Oven Length
UTILITIES REQ'D:	(2)10.0KW, 208V, 3PH
ALTERNATE MFRS.:	Turbo Chef #HHC-1618-VNTLS-48/Double Stack

Furnish and set-in-place per Equipment Plan, Sheet QF-121, Manufacturer's Instructions and the following:

1. Double-Stacked package includes the following;
   -- Two (2) complete ovens with glass access window, Fastbake finger set-up, take-off shelves and high-stand with casters.

2. Cord and plug set.

ITEM #33: VENTILATOR

QUANTITY:	Two (2)
MANUFACTURER:	Captive-Aire Systems, Inc.
MODEL NO.:	6030-ND2-PSP-F (N058)
PERTINENT DATA:	Wall-Mounted, Captrate Solo Filter, Perforated-Ceiling Plenum Make-Up Air, With Fire Protection System
UTILITIES REQ'D:	825 CFM Exhaust/660 CFM Supply; 350W, 120V, 1PH (Lights); 20A, 120V, 1PH, 24-Hour Dedicated Service (Fire Protection System)
ALTERNATE MFRS.:	Avtec; Gaylord

Furnish and install per Equipment Plan, Sheet QF-121; Ventilator Detail Drawing, Sheet QF-509; Manufacturer's Instructions and the following:

1. 5'-0" Wide x 5'-6" Long x 2'-6" High, with bottom edge mounted at 6'-8" A.F.F. Entire unit constructed of 18 GA stainless steel with liquid tight all welded external continuous seams and joints per N.F.P.A. 96,U.L. and State of Delaware Codes.

2. Two (2) U.L. Listed, NSF-Approved, 12"x12" recessed LED light fixtures, equally spaced.

3. Matching stainless steel perimeter closure panels to finished ceiling by K.E.C; verify ceiling height.

4. Surface fire protection system nozzles and piping to be factory installed, chrome plated or stainless steel where exposed, ready for final connections by fire protection system sub-contractor.

ITEM #33: (Continued)

5. Hanger rods and support system from structure above by General Contractor. K.E.C. to coordinate method and location with other trades.

6. Stainless steel hanger brackets.

7. Integral 3" wide stand-off @ rear of hood body with closed ends for semi-combustible compliance.

8. Stainless steel U.L. Classified 20" captrate solo grease filters with hook.

9. Semi-concealed stainless steel grease trough sloped to removable grease cups.

10. Full-length, front-mounted perforated stainless steel ceiling-mounted make-up air plenum with integral supply air balancing dampers.

11. 12" wide utility cabinet mounted on left end with factory pre-piped Ansul R-102 fire suppression system and and Demand Control Ventilation System #DCV1111 with light and fan switches and optional Smart Controls DCV.

12. HVAC Contractor to provide tempered supply air during winter months: 60º F - 65º F.

13. Factory System Design Verification (SDV) shall be performed after all inspections are complete. SDV report shall be available once completed.

14. Accessories:
    - #18GA stainless steel wall flashing from bottom edge of hood to top of finish floor base. Extend full-length of hood body. Attach to wall with non-exposed fasteners.
    - One (1) Ansul Model K01-2 hand-held fire extinguisher, 1.6 gallon, wall-mounted.
    - Six-month and twelve-month inspections, servicing, and replacement of components of fire protection system as per NFPA-96 Latest Edition.

ITEM #34: HOT/COLD FOOD SERVING COUNTER

QUANTITY:	One (1)
MANUFACTURER:	Mark 7 by The Delfield Co.
MODEL NO.:	Stainless Steel Construction, Solid Surface Extended Top, Laminated Front & Exposed Side
PERTINENT DATA:	10'-0" Long x 3'-8" Wide x 2'-10" High
UTILITIES REQ'D:	----
ALTERNATE MFR.:	Progressions by Low-Temp Industries; Essence by Multiteria

Fabricate and set-in-place per Equipment Plan, Sheet QF-121; Fabrication Detail, Sheet QF-501, Manufacturer's Shop Drawing and the following:

1. Base cabinet constructed of stainless steel all-welded angle frame per Detail 4.02.

2. Stainless steel front and end paneling per Detail 4.05A. Front panels with decorative accent; design and color as selected by Architect, K.E.C. to verify.

ITEM #34: (Continued)

3. Heavy-duty counter legs per Detail 1.08. Stainless steel skirting on front and exposed end.

4. Solid surface top: color as selected by Architect, K.E.C. to verify.

5. Provide cut-out in top for Item #36: Hot/Cold Food Well and Item #37: Refrigerated Display Merchandiser.

6. 8" plate shelf on server's side set 10" below countertop with closed ends.

7. 10" wide x 72" long x ½" thick Richlite™ removable and reversible cutting board.

8. Louvered hinged doors per Detail 4.27, with locks.

9. LED strip lighting mounted to the underside of extended top, wired to on/off switch mounted in counter apron, server'side. On/off switch to power both food protector light and counter underside lighting.

ITEM #35: FOOD PROTECTOR

QUANTITY:	One (1)
MANUFACTURER:	BSI, LLC
MODEL NO.:	ZG9930 (N058)
PERTINENT DATA:	ZGuard, Single-Tier, Adjustable Hinged Panels, NSF 2 Compliant
UTILITIES REQ'D:	160W, 120V, 1PH
ALTERNATE MFR.:	Premier Metal and Glass; FlexiShield by The Delfield Co.

Furnish and install on Hot/Cold Food Serving Counter per Equipment Plan, Sheet QF-121; Fabrication Detail, Sheet QF-501; Manufacturer's Shop Drawing and the following:

1. 1" diameter round tubing uprights with brushed stainless steel finish. K.E.C. to verify with Architect.

2. Overall length as shown on plan.

3. Accessories:
   - -- Full-length LED light fixture. Conceal wiring in uprights and extend to remote switch mounted in counter facia at server' side.
   - -- 1/2" tempered glass top.
   - -- 1/4" tempered glass end panels.

4. Mount securely to top of Item #34: Hot/Cold Food ServingCounter with undercounter flange mount.

5. Furnish fully detailed shop drawings for review and approval by local health code agency.

ITEM #36: COMBINATION HOT/COLD FOOD WELLS

QUANTITY: One (1)
MANUFACTURER: Hatco Corporation
MODEL NO.: HCWBI-4DA (N058)
PERTINENT DATA: Four-Well, Drop-In, Manifold Drain, Auto-Fill
UTILITIES REQ'D: 19.2A, 120/208V, 1PH; 1/2″ CW, 3/4" IW
ALTERNATE MFR.: The Delfield Co.

Furnish and install Hot/Cold Food Counter per Equipment Plan, Sheet QF-121; Manufacturer's Shop Drawing and the following:

1. Ship control panel loose for mounting into counter facia by Fabricator.

2. Accessories:
   -- Four (4) Vollrath Company #30040, 12x20x 4" deep stainless steel pans.
   -- Four (4) Vollrath Company #77200 full size solid dome covers.

ITEM #37: REFRIGERATED DISPLAY MERCHANDISER

QUANTITY: Four (4)
MANUFACTURER: Structural Concepts
MODEL NO.: DO3623R (N058)
PERTINENT DATA: Drop-in, Self-Contained, Rear-Loading
UTILITIES REQ'D: 12.0A, 120V, 1PH; 1" IW
ALTERNATE MFRS.: None

Furnish and set-in-place per Equipment Plan, Sheet QF-121; Manufacturer's Instructions, and the following:

1. Accessories:
   -- Shelf lights.
   -- Locking roll-down security cover.
   -- 5-year compressor warranty.
   -- Hinged rear access doors with locks.

2. Cord and plug set.

3. Mount securely to serving counters.

ITEM #38: HOT LUNCH SERVING COUNTER

QUANTITY:	One (1)
MANUFACTURER:	Mark 7 by The Delfield Co.
MODEL NO.:	Stainless Steel Construction, Solid Surface Extended Top, Laminated Front & Exposed Side
PERTINENT DATA:	10'-0" Long x 3'-8" Wide x 2'-10" High
UTILITIES REQ'D:	----
ALTERNATE MFR.:	Progressions by Low-Temp Industries; Essence by Multiteria

Fabricate and set-in-place per Equipment Plan, Sheet QF-121; Fabrication Detail, Sheet QF-501, Manufacturer's Shop Drawing and the following:

1. Base cabinet constructed of stainless steel all-welded angle frame per Detail 4.02.

2. Stainless steel front and end paneling per Detail 4.05A. Front panels with decorative accent; design and color as selected by Architect, K.E.C. to verify.

3. Heavy-duty counter legs per Detail 1.08. Stainless steel skirting on front and exposed end.

4. Solid surface top: color as selected by Architect, K.E.C. to verify.

5. Provide cut-out in top for Item #40: Hot Food Well and Item #37: Refrigerated Display Merchandiser.

6. 8" plate shelf on server's side set 10" below countertop with closed ends.

7. 10" wide x 72" long x ½" thick Richlite™ removable and reversible cutting board.

8. Louvered hinged doors per Detail 4.27.

9. LED strip lighting mounted to the underside of extended top, wired to on/off switch mounted in counter apron, server'side. On/off switch to power both food protector light and counter underside lighting.

ITEM #39: FOOD PROTECTOR

QUANTITY:	One (1)
MANUFACTURER:	BSI, LLC
MODEL NO.:	ZG9930 (N058)
PERTINENT DATA:	ZGuard, Single-Tier, Adjustable Hinged Panels, NSF 2 Compliant
UTILITIES REQ'D:	160W, 120V, 1PH
ALTERNATE MFR.:	Premier Metal and Glass; FlexiShield by The Delfield Co.

Furnish and install on Hot Lunch Serving Counter per Equipment Plan, Sheet QF-121; Fabrication Detail, Sheet QF-501; Manufacturer's Shop Drawing and the following:

1. 1" diameter round tubing uprights with brushed stainless steel finish. K.E.C. to verify with Architect.

ITEM #39: (Continued)

2. Overall length as shown on plan.

3. Accessories:
   -- Full-length LED light fixture. Conceal wiring in uprights and extend to remote switch mounted in counter facia at server side.
   -- 1/2" tempered glass top.
   -- 1/4" tempered glass end panels.

4. Mount securely to top of Item #38: Hot Lunch Serving Counter with undercounter flange mount.

5. Furnish fully detailed shop drawings for review and approval by local health code agency.

ITEM #40: HOT FOOD WELLS

QUANTITY:	One (1)
MANUFACTURER:	Hatco Corporation
MODEL NO.:	HWBI-4DA (N058)
PERTINENT DATA:	Four-Well, Drop-In, Manifold Drain, Auto-Fill
UTILITIES REQ'D:	23.2A, 208V, 1PH; 1/2″ CW, 1" IW
ALTERNATE MFR.:	The Delfield Company

Furnish and install Hot Lunch Serving Counter per Equipment Plan, Sheet QF-121; Manufacturer's Shop Drawing and the following:

1. Ship control panel loose for mounting into counter facia by Fabricator.

2. Accessories:
   -- Four (4) Vollrath Company #30040, 12x20x 4" deep stainless steel pans.
   -- Four (4) Vollrath Company #77200 full size solid dome covers.

ITEM #41: PIZZA SERVING COUNTER

QUANTITY:	One (1)
MANUFACTURER:	Mark 7 by The Delfield Co.
MODEL NO.:	Stainless Steel Construction, Solid Surface Extended Top, Laminated Front & Exposed Side
PERTINENT DATA:	10'-0" Long x 3'-6" Wide x 2'-10" High
UTILITIES REQ'D:	----
ALTERNATE MFR.:	Progressions by Low-Temp Industries; Essence by Multiteria

Fabricate and set-in-place per Equipment Plan, Sheet QF-121; Fabrication Detail, Sheet QF-501, Manufacturer’s Shop Drawing and the following:

1. Base cabinet constructed of stainless steel all-welded angle frame per Detail 4.02.

2. Stainless steel front and end paneling per Detail 4.05A. Front panels with decorative accent; design and color as selected by Architect, K.E.C. to verify.

ITEM #41: (Continued)

3. Heavy-duty counter legs per Detail 1.08. Stainless steel skirting on front and exposed end.

4. Solid surface top: color as selected by Architect, K.E.C. to verify.

5. Provide cut-outs in top for Item #42: Heated Shelf.

6. 8" plate shelf on server's side set 10" below countertop with closed ends.

7. Louvered hinged doors per Detail 4.27,with locks.

8. LED strip lighting mounted to the underside of extended top, wired to on/off switch mounted in counter apron, server'side. On/off switch to power both food protector light and counter underside lighting.

ITEM #42: HEATED SHELF

QUANTITY:	Two (2)
MANUFACTURER:	Hatco Corporation
MODEL NO.:	GRSBF-42-I (N058)
PERTINENT DATA:	Thermostat Controlled, Drop-In W/Flush Top
UTILITIES REQ'D:	885W, 120V, 1PH
ALTERNATE MFR.:	None

Furnish and install in Pizza Serving Counter per Equipment Plan, Sheet QF-121; Manufacturer's Instructions and the following:

1. Recess controls in counter apron, server's side.

ITEM #43: FOOD PROTECTOR

QUANTITY:	One (1)
MANUFACTURER:	BSI, LLC
MODEL NO.:	ZG9930 (N058)
PERTINENT DATA:	ZGuard, Single-Tier, Adjustable Hinged Panels, NSF 2 Compliant
UTILITIES REQ'D:	160W, 120V, 1PH
ALTERNATE MFR.:	Premier Metal and Glass; FlexiShield by The Delfield Co.

Furnish and install on Pizza Serving Counter per Equipment Plan, Sheet QF-121; Fabrication Detail, Sheet QF-501; Manufacturer's Shop Drawing and the following:

1. 1" diameter round tubing uprights with brushed stainless steel finish. K.E.C. to verify with Architect.

2. Overall length as shown on plan.

ITEM #43: (Continued)

3. Accessories:
   -- Full-length single heat and light combo. Conceal wiring in uprights and extend to remote switch mounted in counter facia.
   -- 1/2" tempered glass top.
   -- 1/4" tempered glass end panels.

4. Mount securely to top of Item #41: Pizza Serving Counter with undercounter flange mount.

5. Furnish fully detailed shop drawings for review and approval by local health code agency.

ITEM #44: SALAD SERVING COUNTER

QUANTITY:	One (1)
MANUFACTURER:	Mark 7 by The Delfield Co.
MODEL NO.:	Stainless Steel Construction, Extended Solid Surface Top, Laminated Front & Exposed Side
PERTINENT DATA:	10'-0" Long x 3'-8" Wide x 2'-10" High
UTILITIES REQ'D:	----
ALTERNATE MFR.:	Progressions by Low-Temp Industries; Essence by Multiteria

Fabricate and set-in-place per Equipment Plan, Sheet QF-121; Fabrication Detail, Sheet QF-501, Manufacturer's Shop Drawing and the following:

1. Base cabinet constructed of stainless steel all-welded angle frame per Detail 4.02.

2. Stainless steel front and end paneling per Detail 4.05A. Front panels with decorative accent; design and color as selected by Architect, K.E.C. to verify.

3. Heavy-duty counter legs per Detail 1.08. Stainless steel skirting on front and exposed end.

4. Solid surface top: color as selected by Architect, K.E.C. to verify.

5. Provide cut-out in top for Item #45: Cold Food Well and Item #37: Refrigerated Display Merchandiser.

6. 8" plate shelf on server's side set 10" below countertop with closed ends.

7. Louvered hinged doors per Detail 4.27, with locks.

8. LED strip lighting mounted to the underside of extended top, wired to on/off switch mounted in counter apron, server'side. On/off switch to power both food protector light and counter underside lighting.

ITEM #45: REFRIGERATED COLD PAN

QUANTITY: One (1)
MANUFACTURER: Hatco Corporation
MODEL NO.: CWB-4 (N058)
PERTINENT DATA: (4)-Pan Capacity, Drop-In, Self-Contained
UTILITIES REQ'D: 8.7A, 120V, 1PH; 1" IW
ALTERNATE MFR.: The Delfield Company

Furnish and install in Salad ServingCounter per Equipment Plan, Sheet QF-121; Manufacturer's Shop Drawing and the following:

1. Accessories:
   -- Stainless steel adapter bars for half-size pans.
   -- Eight (8) Vollrath #90242 half-size pans.
   -- #CWB-4SLANT slant option.

ITEM #46: FOOD PROTECTOR

QUANTITY: One (1)
MANUFACTURER: BSI, LLC
MODEL NO.: ZG9930 (N058)
PERTINENT DATA: ZGuard, Single-Tier, Adjustable Hinged Panels, NSF 2 Compliant
UTILITIES REQ'D: 160W, 120V, 1PH
ALTERNATE MFR.: Premier Metal and Glass; FlexiShield by the Delfield Co.

Furnish and install on Salad Serving Counter per Equipment Plan, Sheet QF-121; Fabrication Detail, Sheet QF-501; Manufacturer's Shop Drawing and the following:

1. 1" diameter round tubing uprights with brushed stainless steel finish. K.E.C. to verify with Architect.

2. Overall length as shown on plan.

3. Accessories:
   -- Full-length LED light fixture. Conceal wiring in uprights and extend to remote switch mounted in counter facia.
   -- 1/2" tempered glass top.
   -- 1/4" tempered glass end panels.

4. Mount securely to top of Item #44: Salad Serving Counter with undercounter flange mount.

5. Furnish fully detailed shop drawings for review and approval by local health code agency.

ITEM #47: SPECIALTY/DEMO SERVING COUNTER

QUANTITY: One (1)
MANUFACTURER: Mark 7 by The Delfield Co.
MODEL NO.: Stainless Steel Construction, Solid Surface Extended Top, Laminated Front & Exposed Side
PERTINENT DATA: 10'-0" Long x 3'-8" Wide x 2'-10" High
UTILITIES REQ'D: ----
ALTERNATE MFR.: Progressions by Low-Temp Industries; Essence by Multiteria

Fabricate and set-in-place per Equipment Plan, Sheet QF-121; Fabrication Detail, Sheet QF-501, Manufacturer's Shop Drawing and the following:

1. Base cabinet constructed of stainless steel all-welded angle frame per Detail 4.02.

2. Stainless steel front and end paneling per Detail 4.05A. Front panels with decorative accent; design and color as selected by Architect, K.E.C. to verify.

3. Heavy-duty counter legs per Detail 1.08. Stainless steel skirting on front and exposed end.

4. Solid surface top: color as selected by Architect, K.E.C. to verify.

5. Provide cut-out in top for Item #37: Refrigerated Display Merchandiser.

6. 8" plate shelf on server's side set 10" below countertop with closed ends.

7. Louvered hinged doors per Detail 4.27, with locks.

8. LED strip lighting mounted to the underside of extended top, wired to on/off switch mounted in counter apron, server'side. On/off switch to power both food protector light and counter underside lighting.

ITEM #48: FOOD PROTECTOR

QUANTITY: One (1)
MANUFACTURER: BSI, LLC
MODEL NO.: ZG9500-4 (N058)
PERTINENT DATA: ZGuard, 1-1/4" Tubular Uprights, 1/4" Tempered Glass Vertical Panels, Fully Adjustable, NSF 2 Compliant
UTILITIES REQ'D: ----
ALTERNATE MFR.: Premier Metal and Glass; FlexiShield by The Delfield Co.

Furnish and install on Specialty/Demo Serving Counter per Equipment Plan, Sheet QF-121; Fabrication Detail, Sheet QF-501; Manufacturer's Shop Drawing and the following:

1. 1" diameter round tubing uprights with brushed stainless steel finish. K.E.C. to verify with Architect.

2. Overall length as shown on plan.

ITEM #48: (Continued)

3. Mount securely to top of Item #47: Specialty/Demo Serving Counter with undercounter flange mount.

4. Furnish fully detailed shop drawings for review and approval by local health code agency.

ITEM #49: SOUP WELL RETHERMALIZER

QUANTITY:	Three (3)
MANUFACTURER:	Vollrath Corporation
MODEL NO.:	74110110 (N058)
PERTINENT DATA:	11-Quart Capacity, Stainless Steel
UTILITIES REQ'D:	6.7A, 120V, 1PH
ALTERNATE MFR.:	None

Furnish and install on Specialty/Demo Serving Counter per Equipment Plan, Sheet QF-121; Fabrication Detail, Sheet K5.02; Manufacturer's Shop Drawing and the following:

1. Package unit to consist of: 11-Quart inset, hinged cover and 4oz. ladle.

2. Cord and plug set.

ITEM #50: CASHIER STAND, MOBILE

QUANTITY:	Two (2)
MANUFACTURER:	Mark 7 by The Delfield Co.
MODEL NO.:	Stainless Steel Construction, Extended Solid Surface Top, Laminated Front & Exposed Side
PERTINENT DATA:	4'-6" Long x 4'-6" Wide x 2'-10" High
UTILITIES REQ'D:	----
ALTERNATE MFR.:	Progressions by Low-Temp Industries; Essence by Multiteria

Fabricate and set-in-place per Equipment Plan, Sheet QF-121; Fabrication Detail, Sheet QF-501, Manufacturer’s Shop Drawing and the following:

1. Base cabinet constructed of stainless steel all-welded angle frame per Detail 4.02.

2. 5" diameter heavy-duty polyurethane swivel casters, two (2) with brakes. Stainless steel skirting on front and exposed end.

3. Stainless steel front and end paneling per Detail 4.05A. Front panels with decorative accent; design and color as selected by Architect, K.E.C. to verify.

4. Solid surface top; color as selected by Architect, K.E.C. to verify.

5. Provide cut-out in top with grommet for power cord access to receptacle in floor.

ITEM #50: (Continued)

6. Cashier's drawer assembly with stainless steel pull and cylinder lock sized for removable compartmented plastic cash tray and lock; Indiana Cash Drawer Co., Model #5-BT.

ITEM #51: DROP-IN ICE CREAM MERCHANDISER

QUANTITY: Two (2)
MANUFACTURER: Silver King
MODEL NO.: SKED123-TL-1-BA1 (N058)
PERTINENT DATA: Drop-In, Hinged Lid
UTILITIES REQ'D: 2.7A, 120V, 1PH
ALTERNATE MFRS.: ColorPoint by Low-Temp Industries

Furnish and set-in-place per Equipment Plan, Sheet QF-121; Manufacturer's Instructions and the following:

1. Accessories:
   -- #10315-08 lock bar kit, each unit.

2. Cord and plug set.

ITEM #52: CASH REGISTER -- (N.I.C. – FURNISHED BY OWNER)

QUANTITY: Ten (10)

ITEM #53: CONDIMENT COUNTER, MOBILE

QUANTITY: Two (2)
MANUFACTURER: Mark 7 by The Delfield Co.
MODEL NO.: Stainless Steel Construction, Solid Surface Extended Top, Laminated Front & Exposed Side
PERTINENT DATA: 5'-0" Long x 3'-6" Wide x 2'-10" High
UTILITIES REQ'D: ----
ALTERNATE MFR.: Progressions by Low-Temp Industries; Essence by Multiteria

Fabricate and set-in-place per Equipment Plan, QF-121; Fabrication Detail, Sheet QF-501; and the following:

1. Base cabinet constructed of stainless steel all-welded angle frame per Detail 4.02.

2. Stainless steel front and end paneling per Detail 4.05A. Front panels with decorative accent; design and color as selected by Architect, K.E.C. to verify.

3. 5" diameter heavy-duty polyurethane swivel casters, two (2) with brakes.

4. Stainless steel hinged doors with cylinder locks and laminate finish.

ITEM #54: ICE MACHINE/BIN

QUANTITY: One (1)
MANUFACTURER: Manitowoc
MODEL NO.: IY-0504A/B-570 (N058)
PERTINENT DATA: Air-Cooled, 560-LB. Maker, 570-LB. Bin, Half-Dice Cube Size
UTILITIES REQ'D: 14.2A, 120V, 1PH; ½" CW, ½" IW (Maker Drain), ¾" IW (Bin Drain)
ALTERNATE MFRS.: Ice-O-Matic; Scotsman

Furnish and set-in-place per Equipment Plan, Sheet QF-121; Manufacturer's Instructions and the following:

1. Stainless steel exterior finish, ice machine and bin.

2. Accessories:
   -- One (1) Everpure #EV9324-21 InsurIce i2000² Single water filter system with Everpure #EV9534-26 Coarse Filter, mounted on manufacturer's common wall bracket.
   -- 6" high stainless steel legs with adjustable bullet feet.
   -- Custom fabricated stainless steel ice scoop holder mounted to right-hand side of bin per Detail Sheet K105.

3. Backflow preventor installed on incoming water line by Plumbing Contractor.

4. Cord and plug with matching receptacle furnished and installed by Electrical Contractor.

ITEM #55: PREP SINK

QUANTITY: Two (2)
MANUFACTURER: Custom Fabricated
MODEL NO: #14 GA Stainless Steel
PERTINENT DATA: 7'-0" Long x 2'-6" Wide x 2'-10" High
UTILITIES REQ'D: 1/2" HW, 1/2" CW, (2) 1-1/2" IW
ALTERNATE MFRS.: None

Fabricate and set-in-place per Equipment Plan, Sheet QF-122; Fabrication Detail, Sheet QF-501; and the following:

1. Front and end edge rolls per Detail 1.02B.

2. 13" high backsplash per Detail 1.04A. One (1) unit with partial right end splash.

3. Framework per Detail 1.05.

4. Legs per Detail 1.07.

5. Stainless steel undershelf on both ends per Detail 1.11.

6. Sound-deaden underside of sinks and drainboards with NSF-approved sound dampening material.

ITEM #56: (Continued)

7. Accessories:
   -- One (1) T&S #B-0133-ADF-12-BJ pre-rinse spray faucet with 12" swing-spout add-on faucet, 6" wall bracket and backflow preventer.
   -- Two (2) T&S #B-3950-01 twist waste valves with overflow assemblies and #010387-45 basket strainers.

8. Item will remain shrink-wrapped until ready for final connection by Plumbing Contractor. Immediately following completion of final connections, K.E.C. shall re-shrink-wrap tubs or provide removable panel to avoid use by construction trades. Post sign on wall above sink tubs in English and Spanish stating: WARNING! NOT TO BE USED BY CONSTRUCTION TRADES. FAILURE TO COMPLY WILL RESULT IN $500.00 FINE AND ALL COSTS TO REPLACE ITEM WITH NEW.

ITEM #56: FRUIT SECTIONIZER

QUANTITY: One (1)
MANUFACTURER: Sunkist
MODEL NO.: S-105
PERTINENT DATA: 3-in-1, 2 HALVES scored in 3 wedges ea., NSF Listed
UTILITIES REQ'D: ----
ALTERNATE MFRS.: None

Furnish and set-in-place per Equipment Plan, Sheet QF-122; Manufacturer's Instructions and the following:

1. Accessories:
   -- 6 slice Blade cup, w/cover, fits S-10 (S-4B)
   -- Plunger slicer, fits part S-04, 6 wedge blade cup (S-10)
   -- 8 wedge blade cup (S-29B)
   -- Apple Plunger, fits S-32 (S-33, S-32)
   -- Apple corer cup, fits S-33 (S-32B)
   -- Plastic production stand (S-31)

ITEM #57: CAN OPENER

QUANTITY: One (1)
MANUFACTURER: Edlund Company, Inc.
MODEL NO.: 203 (N058)
PERTINENT DATA: Countertop, Dual-Speed
UTILITIES REQ'D: 4.0A, 120V, 1PH
ALTERNATE MFRS.: None

Furnish and set-in-place per Equipment Plan, Sheet QF-122; Manufacturer's Instructions and the following:

1. Cord and plug set.

ITEM #58: WORKTABLE

QUANTITY: Four (4)
MANUFACTURER: Custom Fabricated
MODEL NO.: #14 GA Stainless Steel
PERTINENT DATA: 5'-0" Long x 2'-6" Wide x 3'-0" High
UTILITIES REQ'D: 1/2" HW, 1/2" CW, 1-1/2" IW
ALTERNATE MFRS.: None

Fabricate and set-in-place per Equipment Plan, Sheet QF-122; Fabrication Detail, Sheet QF-501 and the following:

1. Front and end edge roll per Detail 1.02M.

2. 6" high back and end splash per Detail 1.04A. Refer to equipment plan for end splash location.

3. Framework per Detail 1.05.

4. Legs per Detail 1.07.

5. Stainless steel undershelf per Detail 1.11.

6. One (1) stainless steel drawer assembly per Detail 1.14, Type I, with lock.

7. Worktable per Detail 2.01.

8. Sound-deaden underside of tabletop with NSF-approved sound dampening material.

ITEM #59: WORKTABLE

QUANTITY: Two (2)
MANUFACTURER: Custom Fabricated
MODEL NO.: #14 GA Stainless Steel
PERTINENT DATA: 7'-6" Long x 2'-6" Wide x 3'-0" High
UTILITIES REQ'D: ----
ALTERNATE MFRS.: None

Fabricate and set-in-place per Equipment Plan, Sheet QF-122; Fabrication Detail, Sheet QF-501; and the following:

1. Perimeter edge rolls per Detail 1.02.1M.

2. Framework per Detail 1.05.

3. Legs per Detail 1.07.

4. Stainless steel undershelf per Detail 1.11.

5. Two (2) stainless steel drawer assemblies per Detail 1.14, Type I with locks.

ITEM #59: (Continued)

6. Worktable per Detail 2.01.

7. Sound-deaden underside of tabletop with NSF-approved sound dampening material.

ITEM #60: REFRIGERATED SANDWICH PREP TABLE, MOBILE

QUANTITY:	One (1)
MANUFACTURER:	Victory
MODEL NO.:	VSP48-12 (N058)
PERTINENT DATA:	Self-Contained, (12) 1/6 Pan Capacity, Two Section, Stainless Steel Exterior/Aluminum Interior, With Roll-Top Lid
UTILITIES REQ'D:	5.0A, 120V, 1PH
ALTERNATE MFRS.:	None

Furnish and set-in-place per Equipment Plan, Sheet QF-122; Manufacturer's Instructions, and the following:

1. Accessories:
   - -- Cylinder door lock.
   - -- Adapter bar.
   - -- Full-length composite cutting board.
   - -- Plastic laminate finish with stainless trim factory applied to exterior door fronts only; color as selected by Architect; K.E.C. to verify.

2. Cord and plug set.

ITEM #61: HOT/COLD FOOD SERVING COUNTER

QUANTITY:	One (1)
MANUFACTURER:	Mark 7 by The Delfield Co.
MODEL NO.:	Stainless Steel Construction, Solid Surface Extended Top, Laminated Front & Exposed Side
PERTINENT DATA:	10'-0"± x 6'-0" Long x 3'-5" Wide x 2'-10" High
UTILITIES REQ'D:	----
ALTERNATE MFR.:	Progressions by Low-Temp Industries; Essence by Multiteria

Fabricate and set-in-place per Equipment Plan, Sheet QF-122; Fabrication Detail, Sheet QF-501, Manufacturer’s Shop Drawing and the following:

1. Base cabinet constructed of stainless steel all-welded angle frame per Detail 4.02.

2. Stainless steel front and end paneling per Detail 4.05A. Front panels with decorative accent; design and color as selected by Architect, K.E.C. to verify.

3. Heavy-duty counter legs per Detail 1.08. Stainless steel skirting on front and exposed end.

ITEM #61: (Continued)

4. Solid surface top: color as selected by Architect, K.E.C. to verify.

5. Provide cut-out in top for Item #62: Hot/Cold Food Well.

6. 8" plate shelf on server's side set 10" below countertop with closed ends.

7. 10" wide x 72" long x ½" thick Richlite™ removable and reversible cutting board.

8. Louvered hinged doors per Detail 4.27.

9. LED strip lighting mounted to the underside of extended top, wired to on/off switch mounted in counter apron, server'side. On/off switch to power both food protector light and counter underside lighting.

ITEM #62: COMBINATION HOT/COLD FOOD WELLS

QUANTITY:	One (1)
MANUFACTURER:	Hatco Corporation
MODEL NO.:	HCWBI-5DA (N058)
PERTINENT DATA:	Five-Well, Drop-In, Manifold Drain, Auto-Fill
UTILITIES REQ'D:	6.0KW, 120/208V, 1PH; 1/2″ CW, 3/4" IW
ALTERNATE MFR.:	The Delfield Co.

Furnish and install Hot/Cold Food Counter per Equipment Plan, Sheet QF-122; Manufacturer's Shop Drawing and the following:

1. Ship control panel loose for mounting into counter facia by Fabricator.

2. Accessories:
   -- Five (5) Vollrath Company #30040, 12x20x 4" deep stainless steel pans.
   -- Five (5) Vollrath Company #77200 full size solid dome covers.

ITEM #63: FOOD PROTECTOR

QUANTITY:	One (1)
MANUFACTURER:	BSI, LLC
MODEL NO.:	ZG9930 (N058)
PERTINENT DATA:	ZGuard, Single-Tier, Adjustable Hinged Panels, NSF 2 Compliant
UTILITIES REQ'D:	160W, 120V, 1PH
ALTERNATE MFR.:	Premier Metal and Glass; FlexiShield by The Delfield Co.

Furnish and install on Hot/Cold Food Serving Counter per Equipment Plan, Sheet QF-121; Fabrication Detail, Sheet QF-501; Manufacturer's Shop Drawing and the following:

1. 1" diameter round tubing uprights with brushed stainless steel finish. K.E.C. to verify with Architect.

ITEM #63: (Continued)

2. Overall length as shown on plan.

3. Accessories:
   -- Full-length LED light fixture. Conceal wiring in uprights and extend to remote switch mounted in counter facia.
   -- 1/2" tempered glass top.
   -- 1/4" tempered glass end panels.

4. Mount securely to top of Item #61: Hot/Cold Food Serving Counter with undercounter flange mount.

5. Furnish fully detailed shop drawings for review and approval by local health code agency.

ITEM #64: PANINI GRILL

QUANTITY:	One (1)
MANUFACTURER:	Electrolux
MODEL NO.:	603859 (N058)
PERTINENT DATA:	Countertop, Adjustable Upper Plate, Electronic Control With Digital LED Display
UTILITIES REQ'D:	5.0KW, 208V, 1PH
ALTERNATE MFRS.:	None

Furnish and set-in-place per Equipment Plan, Sheet QF-122; Manufacturer's Instructions and the following:

1. Cord and plug with matching receptacle furnished and installed by Electrical Contractor.

ITEM #65: SOUP & SALAD SERVING COUNTER

QUANTITY:	One (1)
MANUFACTURER:	Mark 7 by The Delfield Co.
MODEL NO.:	Stainless Steel Construction, Solid Surface Extended Top, Laminated Front & Exposed Side
PERTINENT DATA:	10'-0"± x 6'-0" Long x 3'-5" Wide x 2'-10" High
UTILITIES REQ'D:	----
ALTERNATE MFR.:	Progressions by Low-Temp Industries; Essence by Multiteria

Fabricate and set-in-place per Equipment Plan, Sheet QF-122; Fabrication Detail, Sheet QF-501, Manufacturer’s Shop Drawing and the following:

1. Base cabinet constructed of stainless steel all-welded angle frame per Detail 4.02.

2. Stainless steel front and end paneling per Detail 4.05A. Front panels with decorative accent; design and color as selected by Architect, K.E.C. to verify.

ITEM #65: (Continued)

3. Heavy-duty counter legs per Detail 1.08. Stainless steel skirting on front and exposed end.

4. Solid surface top: color as selected by Architect, K.E.C. to verify.

5. Provide cut-out in top for Item #68: Cold Food Well and Item #66: Soup Well.

6. 8" plate shelf on server's side set 10" below countertop with closed ends.

7. Louvered hinged doors per Detail 4.27, with locks.

8. LED strip lighting mounted to the underside of extended top, wired to on/off switch mounted in counter apron, server'side. On/off switch to power both food protector light and counter underside lighting.

ITEM #66: SOUP WELL RETHERMALIZER

QUANTITY: Two (2)
MANUFACTURER: Vollrath Corporation
MODEL NO.: 741101D (N058)
PERTINENT DATA: 11-Quart Capacity, With Drain, Drop-In, Stainless Steel
UTILITIES REQ'D: 6.7A, 120V, 1PH; 3/4" IW
ALTERNATE MFR.: None

Furnish and install on Soup & Salad Serving Counter per Equipment Plan, Sheet QF-122; Fabrication Detail, Sheet QF-501; Manufacturer's Shop Drawing and the following:

1. Package unit to consist of two (2) each: 11-Quart inset, hinged cover and 4oz. ladle.

2. Mount controls on end of counter with hinged access door.

3. Wells furnished with gate valve pre-mounted on drain line.

4. Cord and plug set.

ITEM #67: FOOD PROTECTOR

QUANTITY: One (1)
MANUFACTURER: BSI, LLC
MODEL NO.: ZG9930 (N058)
PERTINENT DATA: ZGuard, Single-Tier, Adjustable Hinged Panels, NSF 2 Compliant
UTILITIES REQ'D: 160W, 120V, 1PH
ALTERNATE MFR.: Premier Metal and Glass; FlexiShield by The Delfield Co.

Furnish and install on Soup/Salad Serving Counter per Equipment Plan, Sheet QF-122; Fabrication Detail, Sheet QF-501; Manufacturer's Shop Drawing and the following:

ITEM #67: (Continued)

1. 1" diameter round tubing uprights with brushed stainless steel finish. K.E.C. to verify with Architect.

2. Overall length as shown on plan.

3. Accessories:
   -- Full-length LED light fixture. Conceal wiring in uprights and extend to remote switch mounted in counter facia.
   -- 1/2" tempered glass top.
   -- 1/4" tempered glass end panels.

4. Mount securely to top of Item #65: Soup/Salad Serving Counter with undercounter flange mount.

5. Furnish fully detailed shop drawings for review and approval by local health code agency.

ITEM #68: REFRIGERATED COLD PAN

QUANTITY:	One (1)
MANUFACTURER:	Hatco Corporation
MODEL NO.:	CWB-4 (N058)
PERTINENT DATA:	(4)-Pan Capacity, Drop-In, Self-Contained
UTILITIES REQ'D:	8.7A, 120V, 1PH; 1" IW
ALTERNATE MFR.:	The Delfield Company

Furnish and install in Soup & Salad Counter per Equipment Plan, Sheet QF-122; Manufacturer's Shop Drawing and the following:

1. Accessories:
   -- Stainless steel adapter bars for half-size pans.
   -- Eight (8) Vollrath #90242 half-size pans.
   -- #CWB-4SLANT slant option.

ITEM #69: PIZZA SERVING COUNTER

QUANTITY:	One (1)
MANUFACTURER:	Mark 7 by The Delfield Co.
MODEL NO.:	Stainless Steel Construction, Solid Surface Extended Top, Laminated Front & Exposed Side
PERTINENT DATA:	10'-0"± x 6'-0" Long x 3'-5" Wide x 2'-10" High
UTILITIES REQ'D:	----
ALTERNATE MFR.:	Progressions by Low-Temp Industries; Essence by Multiteria

Fabricate and set-in-place per Equipment Plan, Sheet QF-122; Fabrication Detail, Sheet QF-501, Manufacturer’s Shop Drawing and the following:

1. Base cabinet constructed of stainless steel all-welded angle frame per Detail 4.02.

ITEM #69: (Continued)

2. Stainless steel front and end paneling per Detail 4.05A. Front panels with decorative accent; design and color as selected by Architect, K.E.C. to verify.

3. Heavy-duty counter legs per Detail 1.08. Stainless steel skirting on front and exposed end.

4. Solid surface top: color as selected by Architect, K.E.C. to verify.

5. Provide cut-outs in top for Item #71: Heated Shelf.

6. 8" plate shelf on server's side set 10" below countertop with closed ends.

7. Louvered hinged doors per Detail 4.27.

8. LED strip lighting mounted to the underside of extended top, wired to on/off switch mounted in counter apron, server'side. On/off switch to power both food protector light and counter underside lighting.

ITEM #70: FOOD PROTECTOR

QUANTITY:	Two (2)
MANUFACTURER:	BSI, LLC
MODEL NO.:	ZG9930 (N058)
PERTINENT DATA:	ZGuard, Single-Tier, Adjustable Hinged Panels, NSF 2 Compliant
UTILITIES REQ'D:	160W, 120V, 1PH
ALTERNATE MFR.:	Premier Metal and Glass; FlexiShield by The Delfield Co.

Furnish and install on Pizza Serving Counter per Equipment Plan, Sheet QF-122; Fabrication Detail, Sheet QF-501; Manufacturer's Shop Drawing and the following:

1. 1" diameter round tubing uprights with brushed stainless steel finish. K.E.C. to verify with Architect.

2. Overall length as shown on plan.

3. Accessories:
   -- Full-length single heat and light combo. Conceal wiring in uprights and extend to remote switch mounted in counter facia.
   -- 1/2" tempered glass top.
   -- 1/4" tempered glass end panels.

4. Mount securely to top of Item #69: Pizza Serving Counter with undercounter flange mount.

5. Furnish fully detailed shop drawings for review and approval by local health code agency.

ITEM #71: HEATED SHELF

QUANTITY: Two (2)
MANUFACTURER: Hatco Corporation
MODEL NO.: GRSBF-42-I (N058)
PERTINENT DATA: Thermostat Controlled, Drop-In W/Flush Top
UTILITIES REQ'D: 885W, 120V, 1PH
ALTERNATE MFR.: None

Furnish and install in Pizza Serving Counter per Equipment Plan, Sheet QF-122; Manufacturer's Instructions and the following:

1. Recess controls in counter apron, server's side.

ITEM #72: SPECIALTY/DEMO SERVING COUNTER

QUANTITY: One (1)
MANUFACTURER: Mark 7 by The Delfield Co.
MODEL NO.: Stainless Steel Construction, Solid Surface Extended Top, Laminated Front & Exposed Side
PERTINENT DATA: 10'-0"± x 6'-0" Long x 3'-5" Wide x 2'-10" High
UTILITIES REQ'D: ----
ALTERNATE MFR.: Progressions by Low-Temp Industries; Essence by Multiteria

Fabricate and set-in-place per Equipment Plan, Sheet QF-122; Fabrication Detail, Sheet QF-501, Manufacturer's Shop Drawing and the following:

1. Base cabinet constructed of stainless steel all-welded angle frame per Detail 4.02.

2. Stainless steel front and end paneling per Detail 4.05A. Front panels with decorative accent; design and color as selected by Architect, K.E.C. to verify.

3. Heavy-duty counter legs per Detail 1.08. Stainless steel skirting on front and exposed end.

4. Solid surface top: color as selected by Architect, K.E.C. to verify.

5. Provide cut-out in top for Item #74: Heated Shelf.

6. 8" plate shelf on server's side set 10" below countertop with closed ends.

7. Louvered hinged doors per Detail 4.27.

8. LED strip lighting mounted to the underside of extended top, wired to on/off switch mounted in counter apron, server'side. On/off switch to power both food protector light and counter underside lighting.

ITEM #73: HEATED SANDWICH MERCHANDISER

QUANTITY: One (1)
MANUFACTURER: Hatco Corporation
MODEL NO.: HZMH-42D (N058)
PERTINENT DATA: Single Service, Countertop, Dual Slant Shelf
UTILITIES REQ'D: 12.1A, 120/208V, 1PH
ALTERNATE MFR.: None

Furnish and set-in-place per Equipment Plan, Sheet QF-122; Manufacturer's Instructions and the following:

1. Accessories:
   -- Flip-up doors on customer's side, each shelf.
   -- Designer color inset panels, color as selected by Architect, K.E.C. to verify.
   -- #DS-ITC indicating temperature control.

2. Cord and plug set.

ITEM #74: HEATED SHELF

QUANTITY: One (1)
MANUFACTURER: Hatco Corporation
MODEL NO.: GRSBF-36-I (N058)
PERTINENT DATA: Thermostat Controlled, Drop-In W/Flush Top
UTILITIES REQ'D: 780W, 120V, 1PH
ALTERNATE MFR.: None

Furnish and install in Specialty/Demo Serving Counter per Equipment Plan, Sheet QF-122; Manufacturer's Instructions and the following:

1. Recess controls in counter apron, server's side.

ITEM #75: FOOD PROTECTOR

QUANTITY: One (1)
MANUFACTURER: BSI, LLC
MODEL NO.: ZG9500-4 (N058)
PERTINENT DATA: ZGuard, 1-1/4" Tubular Uprights, 1/4" Tempered Glass Vertical Panels, Fully Adjustable, NSF 2 Compliant
UTILITIES REQ'D: ----
ALTERNATE MFR.: Premier Metal and Glass; FlexiShield by The Delfield Co.

Furnish and install on Specialty/Demo Counter per Equipment Plan, Sheet QF-122; Fabrication Detail, Sheet QF-501; Manufacturer's Shop Drawing and the following:

1. 1" diameter round tubing uprights with brushed stainless steel finish. K.E.C. to verify with Architect.

2. Overall length as shown on plan.

ITEM #75: (Continued)

3. Mount securely to top of Item #72: Specialty/Demo Serving Counter with undercounter flange mount.

4. Furnish fully detailed shop drawings for review and approval by local health code agency.

ITEM #76: HOT LUNCH SERVING COUNTER

QUANTITY:	One (1)
MANUFACTURER:	Mark 7 by The Delfield Co.
MODEL NO.:	Stainless Steel Construction, Solid Surface Extended Top, Laminated Front & Exposed Side
PERTINENT DATA:	10'-0"± x 6'-0" Long x 3'-5" Wide x 2'-10" High
UTILITIES REQ'D:	----
ALTERNATE MFR.:	Progressions by Low-Temp Industries; Essence by Multiteria

Fabricate and set-in-place per Equipment Plan, Sheet QF-122; Fabrication Detail, Sheet QF-501, Manufacturer's Shop Drawing and the following:

1. Base cabinet constructed of stainless steel all-welded angle frame per Detail 4.02.

2. Stainless steel front and end paneling per Detail 4.05A. Front panels with decorative accent; design and color as selected by Architect, K.E.C. to verify.

3. Heavy-duty counter legs per Detail 1.08. Stainless steel skirting on front and exposed end.

4. Solid surface top: color as selected by Architect, K.E.C. to verify.

5. Provide cut-out in top for Item #78: Hot Food Well.

6. 8" plate shelf on server's side set 10" below countertop with closed ends.

7. 10" wide x 72" long x ½" thick Richlite™ removable and reversible cutting board.

8. Louvered hinged doors per Detail 4.27.

9. LED strip lighting mounted to the underside of extended top, wired to on/off switch mounted in counter apron, server'side. On/off switch to power both food protector light and counter underside lighting.

ITEM #77: FOOD PROTECTOR

QUANTITY: One (1)
MANUFACTURER: BSI, LLC
MODEL NO.: ZG9930 (N058)
PERTINENT DATA: ZGuard, Single-Tier, Adjustable Hinged Panels, NSF 2 Compliant
UTILITIES REQ'D: 160W, 120V, 1PH
ALTERNATE MFR.: Premier Metal and Glass; FlexiShield by The Delfield Co.

Furnish and install on Hot Lunch Serving Counter per Equipment Plan, Sheet QF-122; Fabrication Detail, Sheet QF-501; Manufacturer's Shop Drawing and the following:

1. 1" diameter round tubing uprights with brushed stainless steel finish. K.E.C. to verify with Architect.

2. Overall length as shown on plan.

3. Accessories:
   -- Full-length LED light fixture. Conceal wiring in uprights and extend to remote switch mounted in counter facia.
   -- 1/2" tempered glass top.
   -- 1/4" tempered glass end panels.

4. Mount securely to top of Item #76: Hot Lunch Serving Counter with undercounter flange mount.

5. Furnish fully detailed shop drawings for review and approval by local health code agency.

ITEM #78: HOT FOOD WELLS

QUANTITY: One (1)
MANUFACTURER: Hatco Corporation
MODEL NO.: HWBI-5DA (N058)
PERTINENT DATA: Five-Well, Drop-In, Manifold Drain, Auto-Fill
UTILITIES REQ'D: 28.9A, 208V, 1PH; 1/2″ CW, 1" IW
ALTERNATE MFR.: The Delfield Company

Furnish and install Hot Lunch Serving Counter per Equipment Plan, Sheet QF-122; Manufacturer's Shop Drawing and the following:

1. Ship control panel loose for mounting into counter facia by Fabricator.

2. Accessories:
   -- Five (5) Vollrath Company #30040, 12x20x 4" deep stainless steel pans.
   -- Five (5) Vollrath Company #77200 full size solid dome covers.

ITEM #79: REFRIGERATED DISPLAY MERCHANDISER

QUANTITY: Three (3)
MANUFACTURER: Structural Concepts
MODEL NO.: C057R (N058)
PERTINENT DATA: Free-Standing, Remote Refrigeration, Self-Service, Oasis Series
UTILITIES REQ'D: 2.34A, 120V, 1PH; 1" IW
ALTERNATE MFR.: None

Furnish and set-in-place per Equipment Plan, Sheet QF-121; Manufacturer's Instructions and the following:

1. Accessories:
   --- Front with plastic laminate finish, color as selected by Architect; K.E.C. to verify.
   -- Four (4) lighted shelves.
   -- Roll-down, locking security cover.
   -- 5-year compressor warranty.
   -- Hinged rear access doors.

2. Cord and plug set with matching receptacle furnished and installed by Electrical Contractor.

3. Remote refrigeration provided under Item #3: Refrigeration System.

ITEM #80: ICE CREAM CABINET, MOBILE

QUANTITY: Three (3)
MANUFACTURER: Norlake
MODEL NO.: FF044WVS/0 (N058)
PERTINENT DATA: Hinged Lids, White Painted Cabinet, Self-Contained
UTILITIES REQ'D: 5.7A, 120V, 1PH
ALTERNATE MFRS.: Master-Bilt

Furnish and set-in-place per Equipment Plan, Sheet QF-122, Manufacturer's Instructions and the following:

1. Cord and plug set.

ITEM #81: CASHIER STAND, MOBILE

QUANTITY: Three (3)
MANUFACTURER: Mark 7 by The Delfield Co.
MODEL NO.: Stainless Steel Construction, Solid Surface Extended Top, Laminated Front & Exposed Side
PERTINENT DATA: 6'-9" Long x 4'-6" Wide x 2'-10" High
UTILITIES REQ'D: ----
ALTERNATE MFR.: Progressions by Low-Temp Industries; Essence by Multiteria

ITEM #81: (Continued)

Fabricate and set-in-place per Equipment Plan, Sheet QF-122; Fabrication Detail, Sheet QF-501, Manufacturer's Shop Drawing and the following:

1. Base cabinet constructed of stainless steel all-welded angle frame per Detail 4.02.

2. 5" diameter heavy-duty polyurethane swivel casters, two (2) with brakes. Stainless steel skirting on front and exposed end.

3. Stainless steel front and end paneling per Detail 4.05A. Front panels with decorative accent; design and color as selected by Architect, K.E.C. to verify.

4. Solid surface top; color as selected by Architect, K.E.C. to verify.

5. Provide cut-out in top with grommet for power cord access to receptacle in floor and Item #82: Refrigerated Cold Pan.

6. Cashier's drawer assembly with stainless steel pull and cylinder lock sized for removable compartmented plastic cash tray and lock; Indiana Cash Drawer Co., Model #5-BT.

ITEM #82: REFRIGERATED COLD PAN

QUANTITY:	Three (3)
MANUFACTURER:	The Delfield Company
MODEL NO.:	N8143B (N058)
PERTINENT DATA:	(3)-Pan Capacity, Drop-In, Self-Contained
UTILITIES REQ'D:	4.0A, 120V, 1PH; 1" IW
ALTERNATE MFR.:	Hatco Corporation

Furnish and install in Cashier Stand per Equipment Plan, Sheet QF-122 and Manufacturer's Shop Drawing.

ITEM #83: CONDIMENT COUNTER, MOBILE

QUANTITY:	Two (2)
MANUFACTURER:	Mark 7 by The Delfield Co.
MODEL NO.:	Stainless Steel Construction, Solid Surface Extended Top, Laminated Front & Exposed Side
PERTINENT DATA:	5'-0" Long x 3'-6" Wide x 2'-10" High
UTILITIES REQ'D:	---
ALTERNATE MFR.:	Progressions by Low-Temp Industries; Essence by Multiteria

Fabricate and set-in-place per Equipment Plan, QF-122; Fabrication Detail, Sheet QF-501; and the following:

1. Base cabinet constructed of stainless steel all-welded angle frame per Detail 4.02.

ITEM #83: (Continued)

2. Stainless steel front and end paneling per Detail 4.05A. Front panels with decorative accent; design and color as selected by Architect, K.E.C. to verify.

3. 5" diameter heavy-duty polyurethane swivel casters, two (2) with brakes.

4. Stainless steel hinged doors with cylinder locks and laminate finish.

ITEM #84: POT WASHING SINK

QUANTITY:	One (1)
MANUFACTURER:	Custom Fabricated
MODEL NO.:	#14 GA Stainless Steel
PERTINENT DATA:	13'-6"± Long x 2'-6" Wide x 2'-10" High
UTILITIES REQ'D:	(2) 3/4" HW, (2) 3/4" CW, (3) 2" IW
ALTERNATE MFRS.:	None

Fabricate and set-in-place per Equipment Plan, Sheet QF-122; Fabrication Detail, Sheet QF-501; and the following:

1. Front and end edge rolls per Detail 1.02B.

2. 13" high back, right and partial left end splash per Detail 1.04A.

3. Framework per Detail 1.05.

4. Legs per Detail 1.07.

5. Crossbracing per Detail 1.10.

6. Stainless steel undershelf on both ends per Detail 1.11.

7. Two (2) table-mounted stainless steel overshelf with stainless steel sliding pot hooks per Detail 1.12.

8. Pot sink and drainboards per Detail 3.01.

9. Sound-deaden underside of sinks and drainboards with NSF-approved sound dampening material.

10. Accessories:
    - -- One (1) T&S #B-290 backsplash mounted swing spout faucet.
    - -- One (1) T&S #B-0133-ADF-12-BJ pre-rinse spray faucet with 12" swing-spout add-on faucet, 6" wall bracket and backflow preventer.
    - -- Three (3) T&S #B-3950-01 twist handle drains with rear-connected over-flows and basket strainers.

ITEM #84: (Continued)

11. Item will remain shrink-wrapped until ready for final connection by Plumbing Contractor. Immediately following completion of final connections, K.E.C. shall re-shrink-wrap tubs or provide removable panel to avoid use by construction trades. Post sign on wall above sink tubs in English and Spanish stating: WARNING! NOT TO BE USED BY CONSTRUCTION TRADES. FAILURE TO COMPLY WILL RESULT IN $500.00 FINE AND ALL COSTS TO REPLACE ITEM WITH NEW.

ITEM #85: TRASH CONTAINER, MOBILE

QUANTITY: Eight (8)
MANUFACTURER: Rubbermaid Commercial Products, Inc.
MODEL NO.: FG2632 (N058)
PERTINENT DATA: 32-Gallon Capacity
UTILITIES REQ'D: ----
ALTERNATE MFRS.: Continental Plastics

Furnish and set-in-place per Equipment Plan, Sheet QF-122; Manufacturer's Instructions and the following:

1. Grey in color.

2. Accessories:
   -- Eight (8) #FG2645 matching flat lids.
   -- Eight (8) #FG2640 conversion dollies.

ITEM #86: SOILED DISHTABLE

QUANTITY: One (1)
MANUFACTURER: Custom Fabricated
MODEL NO.: #14 GA Stainless Steel
PERTINENT DATA: 10'-0"± Long x 2'-6" Wide x 2'-10" High
UTILITIES REQ'D: 1/2" HW, 1/2" CW, 1-1/2" IW
ALTERNATE MFRS.: None

Fabricate and set-in-place per Equipment Plan, Sheet QF-122; Fabrication Detail, Sheet QF-501; and the following:

1. Front edge roll per Detail 1.02B.

2. 13" high back and right endsplash per Detail 1.04A.

3. Framework per Detail 1.05.

4. Legs per Detail 1.07.

5. Crossbracing per Detail 1.10.

ITEM #86: (Continued)

6. Soiled dishtable per Detail 2.02.

7. Table trough at entrance to dishmachine per Detail 2.03.

8. Weld collar adapter to underside of sink for Disposer, Item #16.

9. Stainless steel disposer switch bracket.

10. 2-0" long table-mounted single-sided slanted glass rack shelf per Detail 2.19.

11. 20" wide x 8" deep integral pre-rinse sink with one-piece removable #22 gauge perforated stainless steel scrap basket with 1" diameter fully welded tubular cross-rails set flush with tabletop. Raise deck at rear of sink 6" for deck-mounted pre-rinse spray and extend to opening of dishmachine to act as rack guide.

11. Sound-deaden underside of drainboard with NSF-approved sound dampening material.

ITEM #87: HOSE REEL ASSEMBLY

QUANTITY:	One (1)
MANUFACTURER:	Fisher Manufacturing Company
MODEL NO.:	2980 (N058)
PERTINENT DATA:	Wall-Mounted, Open No Cover
UTILITIES REQ'D:	1/2"HW, 1/2"CW
ALTERNATE MFR.:	T&S Brass

Furnish and install per Equipment Plan, Sheet QF-122; Manufacturer's Instructions and the following:

1. Mount hose reel assembly on wall with bottom of spray head @ 6'-0" A.F.F. when in fully retracted position.

2. Accessories:
   -- One (1) Aquatrol Model #1801 recessed stainless steel control cabinet with valves, gauges, fittings and components for a complete system.

ITEM #88: POT & PAN WASHER

QUANTITY:	One (1)
MANUFACTURER:	Champion Industries
MODEL NO:	PP-20-PT (N058)
PERTINENT DATA:	Rack Type, Double Rack, Pass-Thru Design, 20 Pan Capacity, Built-in 70° Rise Booster Heater
UTILITIES REQ'D:	58.0A, 480V, 3PH; 3/4"HW (120°F.), 1-1/4" IW
ALTERNATE MFRS.:	None

ITEM #88: (Continued)

Furnish and set-in-place per Equipment Plan, Sheet QF-122; Manufacturer's Instructions and the following:

1. Heavy-duty stainless steel construction.

2. Two (2) stainless steel utensil racks with (2) hold down lids, two (2) stainless steel racks for bun/sheet pans.

3. Recirculating wash water.

4. Adjustable wash/rinse cycles.

5. Digital Control & Information Center.

6. Electric water heating.

7. Space-saving, easy-action lift door.

8. External pre-rinse and wash-down hose.

9. Moisture-resistant control gauges.

10. Maintenance-free hub assembly.

11. Easy-to-remove double filter system.

12. Adjustable hold-down lid.

13. Factory authorized performance test upon equipment start-up.

14. Single point electrical connection.

ITEM #89: CONDENSATE CANOPY

QUANTITY:	One (1)
MANUFACTURER:	Captive-Aire Systems, Inc.
MODEL NO:	4830VHB-G (N058)
PERTINENT DATA:	Stainless Steel, Exhaust Only Canopy
UTILITIES REQ'D:	1,125 CFM; 3/4" IW
ALTERNATE MFRS.:	Avtec; Gaylord

Fabricate and install per Equipment Plan, Sheet QF-122; Manufacturer’s Instructions and the following:

1. 4'-0" wide x 7'-6" long x 2'-6" high with bottom edge mounted at 6'-8" A.F.F. Entire unit constructed of 18 GA type 304 stainless steel with #4 finish on all exposed surfaces.

2. 1" wide full-perimeter integral gutter with 1/2" turn-up and 3/4" stainless steel drain connection.

ITEM #89: (Continued)

3. Integral stainless steel rod hanger brackets, each corner.

4. Stainless steel duct tap collar with removable aluminum mesh filter.

5. Stainless steel perimeter closure panels to finished ceiling by K.E.C.; verify ceiling height.

6. Accessories:
   -- #18GA stainless steel wall flashing from bottom edge of hood to top of finish floor base. Extend full-length of hood body. Attach to wall with non-exposed fasteners.

ITEM #90: CLEAN DISHTABLE

QUANTITY: One (1)
MANUFACTURER: Custom Fabricated
MODEL NO.: #14 Gauge Stainless Steel Construction
PERTINENT DATA: 6'-6"± L x 2'-6" W x 2'-10" H
UTILITIES REQ'D: ----
ALTERNATE MFRS.: None

Fabricate and set-in-place per Equipment Plan, Sheet QF-122; Fabrication Detail, Sheet QF-501; and the following:

1. Front end edge roll per Detail 1.02B.

2. 13" high back and left end splash per Detail 1.04A.

3. Framework per Detail 1.05.

4. Legs per Detail 1.07.

5. Stainless steel undershelf per Detail 1.11.

6. 4'-6" long stainless steel overshelf per Detail 1.12.

7. Dishtable per Detail 2.02.

8. Sound deaden underside of drainboard with NSF-approved sound dampening material.

ITEM #91: POT & PAN SHELVING, MOBILE

QUANTITY: Two (2)
MANUFACTURER: InterMetro Industries Corporation
MODEL NO.: MetroMax i (N058)
PERTINENT DATA: Four-Tier High, Open-Grid Shelf Mat, Polymer
UTILITIES REQ'D: ----
ALTERNATE MFRS.: None

ITEM #91: (Continued)

Furnish and set-in-place per Equipment Plan, Sheet QF-122; Manufacturer's Instructions and the following:

1. Two (2) #MX2448G sections; 24" W x 48" L x 4-tier high.

2. Eight (8) #MX63UP polymer posts, 63" high.

3. Four (4) #5MPX polyurethane swivel casters with bumpers.

4. Four (4) #5MPBX polyurethane swivel casters with brakes and bumpers.

5. Plastic wedge lock connectors, quantity as required.

6. Locate bottom shelf @ 12" A.F.F.; space remaining shelves equally.

7. Accessories:
   -- Two (2) #MTR2448XE tray drying racks.
   -- Ten (10) #MXD24-8 shelf dividers.

ITEM #92: UTILITY CART, MOBILE

QUANTITY: Eight (8)
MANUFACTURER: Lakeside Manufacturing Company
MODEL NO.: 544 (N058)
PERTINENT DATA: 700-Lb. Capacity, Three-Shelf, N.S.F. Model
UTILITIES REQ'D: ----
ALTERNATE MFRS.: Piper Products

Furnish and set-in-place per Equipment Plan, Sheets QF-121 and QF-122; Manufacturer's Instructions and the following:

1. All four (4) casters swivel-type.

ITEM #93: WASHER/DRYER -- (N.I.C. – FURNISHED BY OWNER)

QUANTITY: One (1)

(END OF FOODSERVICE ITEMIZED SPECIFICATIONS)

STANDARD DETAILS

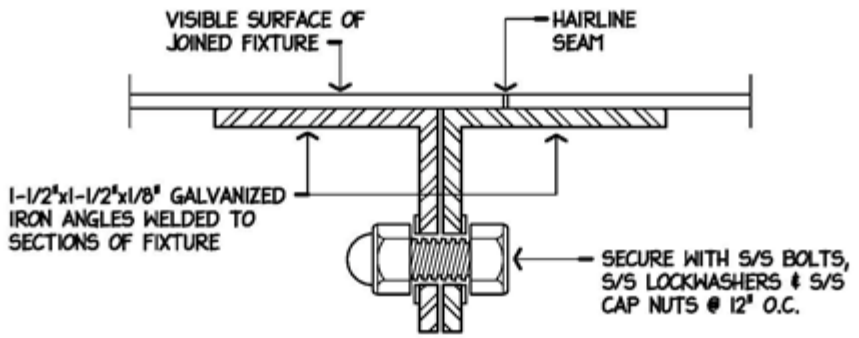

NOTE! JOINED SECTIONS SHALL BE DRAWN TOGETHER LEAVING ONLY A HAIRLINE SEAM.

A. BOLT DRAWN JOINT

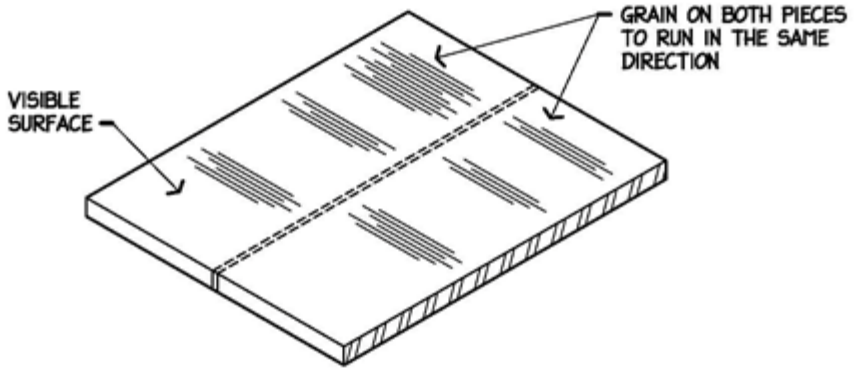

NOTE! ON FIXTURES SPECIFIED WITH WELDED FIELD JOINTS, WELDS SHALL BE CONTINUOUS, GROUND & POLISHED LEAVING NO VISIBLE EVIDENCE OF WELD.

B. WELDED BUTT JOINT

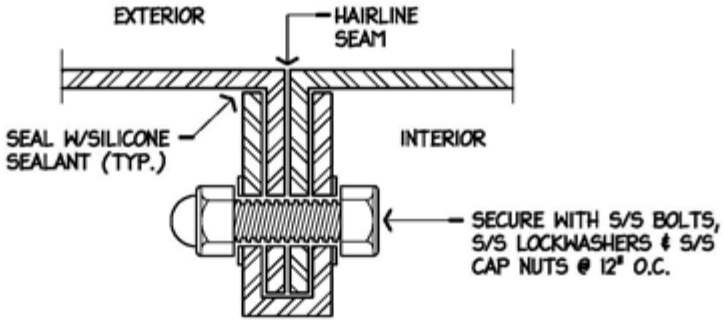

NOTE! JOINED SECTIONS SHALL BE DRAWN TOGETHER LEAVING ONLY A HAIRLINE SEAM.

C. RAISED CAP SEAM - KNUCKLE JOINT

NYIKOS ASSOCIATES, INC. Food Facilities Design/Consulting	DESCRIPTION: FIELD JOINTS & ASSEMBLY	STANDARD DTL: 1.01

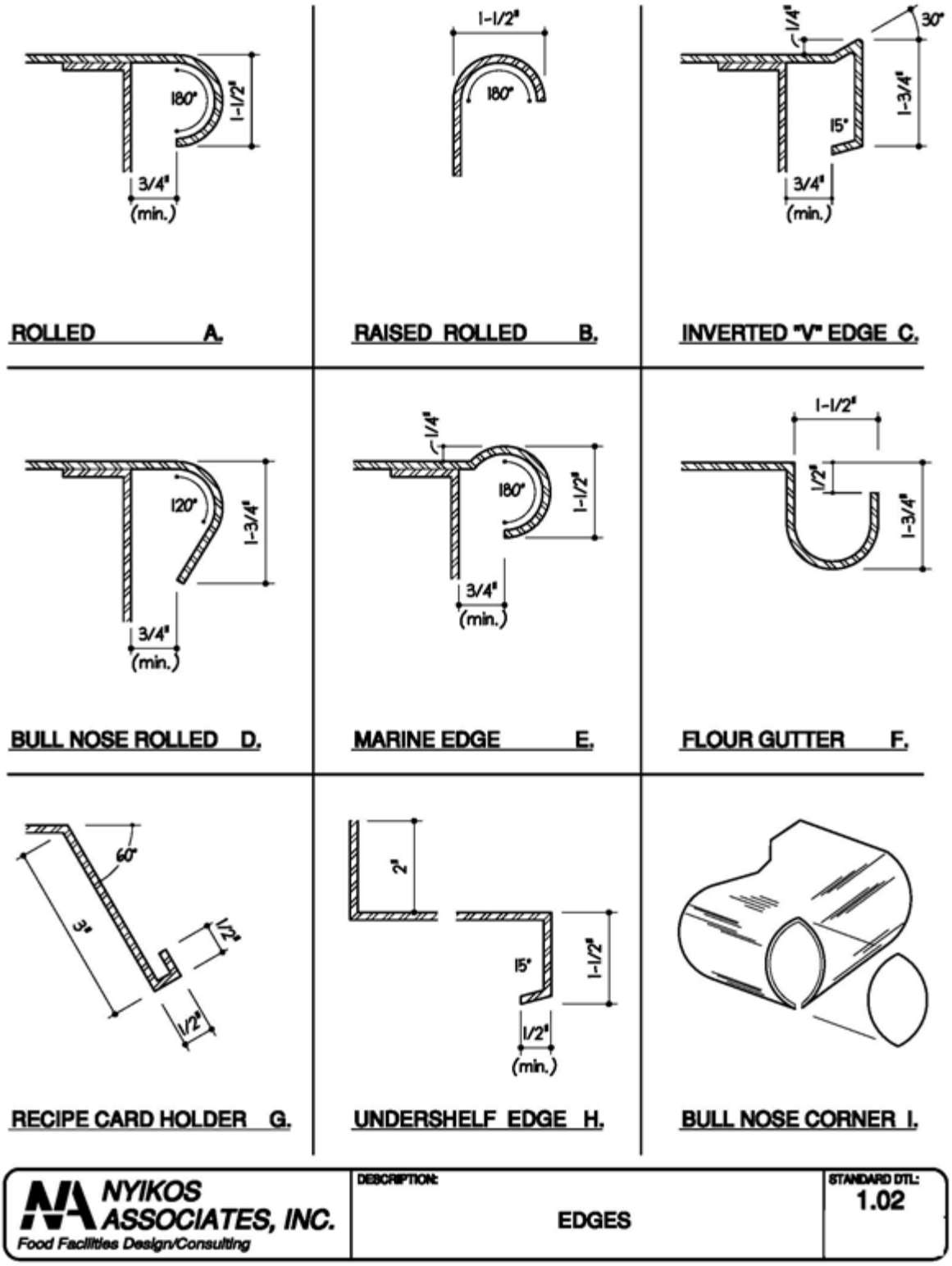
180°
1-1/2"
3/4"
(min.)
ROLLED A.
1-1/2"
180°
RAISED ROLLED B.
1/4"
30°
1-3/4"
15°
3/4"
(min.)
INVERTED "V" EDGE C.
120°
1-3/4"
3/4"
(min.)
BULL NOSE ROLLED D.
1/4"
180°
1-1/2"
3/4"
(min.)
MARINE EDGE E.
1-1/2"
1/2"
1-3/4"
FLOUR GUTTER F.
60°
3"
1/2"
1/2"
RECIPE CARD HOLDER G.
2"
15°
1-1/2"
1/2"
(min.)
UNDERSHELF EDGE H.
BULL NOSE CORNER I.
NYIKOS ASSOCIATES, INC.
Food Facilities Design/Consulting
DESCRIPTION:
EDGES
STANDARD DTL:
1.02

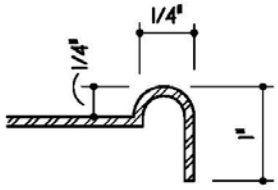

RAISED OPENING EDGE J.

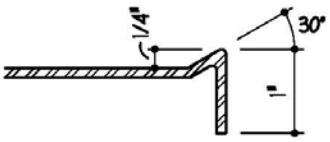

RAISED OPENING EDGE K.

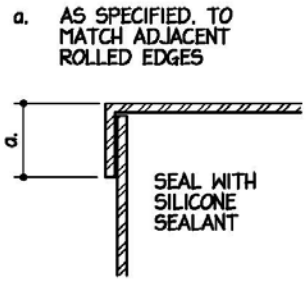

STRAIGHT TURN DOWN L.

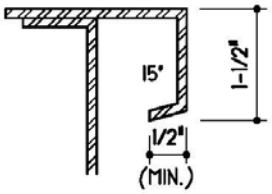

TURNED DOWN EDGE M.

NYIKOS ASSOCIATES, INC.
Food Facilities Design/Consulting

DESCRIPTION: EDGES

STANDARD DTL: 1.02.1

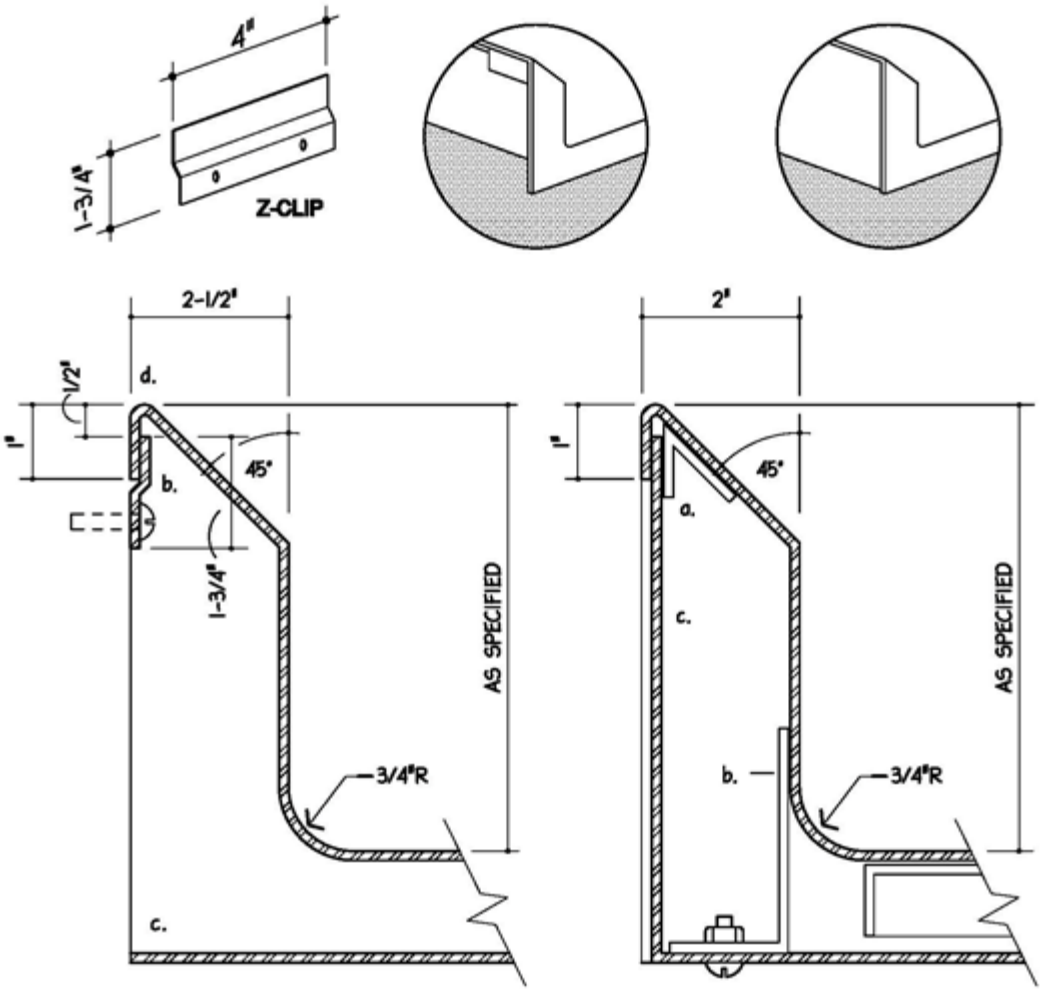

WALL UNIT

DETAIL A

a. 2-1/2" AT SINK TO ALLOW FOR CONNECTED OVERFLOW

b. 12 GA. S/S CLIPS, 4" LONG, FASTENED TO EACH WALL END OF EACH UNIT ¢ 4'-0" ON CENTER. SECURE TO WALL W/A MINIMUM OF TWO 1/4"x20 S/S TOGGLE BOLTS OR EXPANSION SHIELDS.

c. EXPOSED ENDS TO BE FULLY WELDED CLOSED.

d. SEAL ALL AROUND TO WALL WITH SILICONE SEALANT.

FREE STANDING UNIT

DETAIL B

a. 1"x1"x14 GA. S/S x1-1/2"LONG RETAINING CLIP WELDED IN PLACE. ONE AT EACH END OF UNIT AND 12" ON CENTER.

b. 2-1/2"x1-1/2x1-1/2" 14 GA.S/S CLIP WELDED TO SPLASH. ONE AT OF EACH UNIT ¢ 12" ON CENTER.

c. 14 GA S/S PANEL SECURED TO CLIPS W/ S/S OVALHEAD BOLT. WELD NUT TO CLIP.

d. EXPOSED ENDS TO BE FULLY WELDED.

NYIKOS ASSOCIATES, INC. Food Facilities Design/Consulting	DESCRIPTION: BACKSPLASHES	STANDARD DTL: 1.04

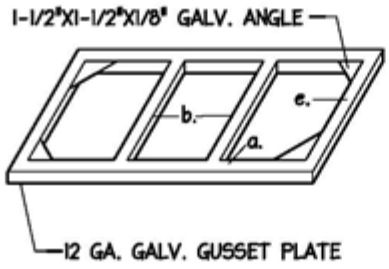

TABLES

A.

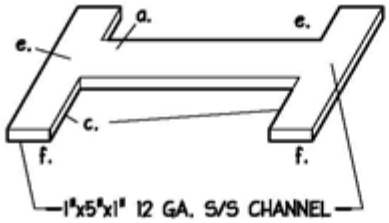

DISHTABLES

B.

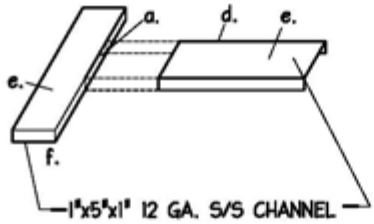

SINK DRAINBOARDS

C.

a. FULLY WELDED CONSTRUCTION.

b. ANGLE LOCATION - ENDS; SIDES OF TOP INSETS; INTERMEDIATES 24" ON CENTER.

c. CHANNEL LOCATION - ENDS AND INTERMEDIATE MAXIMUM 6'-6" O.C.

d. ADD CENTER CHANNEL WHEN DRAINBOARD LENGHT EXCEEDS 5'-6".

e. SECURE TOP TO FRAMEWORK WITH WELDED STUDS, S/S LOCKWASHERS AND CAP NUTS.

f. CLOSE CHANNEL AT FRONT ONLY.

NYIKOS ASSOCIATES, INC. Food Facilities Design/Consulting	DESCRIPTION: TABLE & DRAINBOARD FRAMEWORK	STANDARD DTL: 1.05

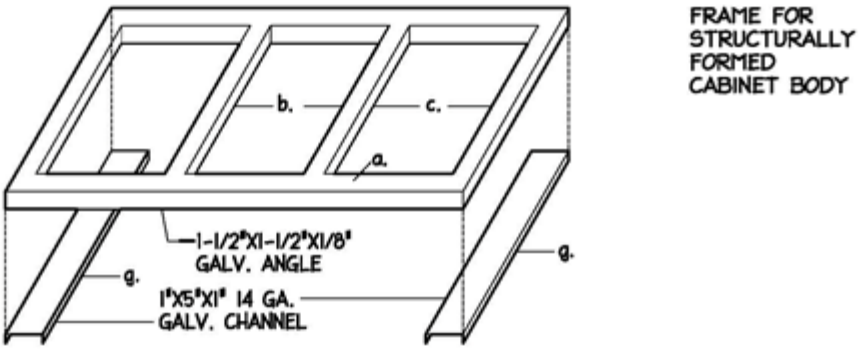

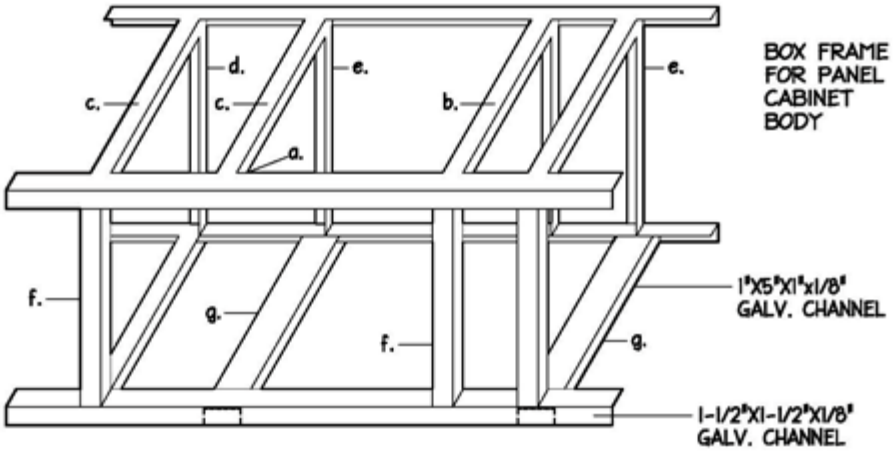

a. FULLY WELDED CONSTRUCTION.

b. SECURE TOP TO FRAMEWORK WITH WELDED STUDS, S/S LOCKWASHERS, AND CAP UNITS. MAXIMUM 15" ON CENTER.

c. TOP ANGLE LOCATION - ENDS; SIDES OF TOP INSETS; UNDER HEAVY EQUIPMENT LEGS; INTERMEDIATES 24" ON CENTER.

d. BACK ANGLE LOCATION - ENDS; INTERMEDIATE MAXIMUM 5'-6" ON CENTER.

e. CAFETERIA FRONT ANGLE (CHANNEL) LOCATION - ENDS; INTERMEDIATES TO CORRESPOND TO PILASTERS, SLIDE BRACKETS, PANEL SPACING, MAXIMUM 4'-0" ON CENTER. RE: STDS.-4.01 THRU 4.04.

f. WORK SIDE ANGLE LOCATION - ENDS; SIDE OF OPENINGS; INTERMEDIATES MAXIMUM 5'-6" ON CENTER.

g. BOTTOM LEG CHANNEL LOCATION - ENDS; INTERMEDIATES CORRESPOND TO FRONT PANEL SPACING; PILASTERS, SLIDE BRACKETS. MAXIMUM 5'-6" ON CENTER.

NYIKOS ASSOCIATES, INC. Food Facilities Design/Consulting	DESCRIPTION: COUNTER FRAMEWORK	STANDARD DTL: 1.06

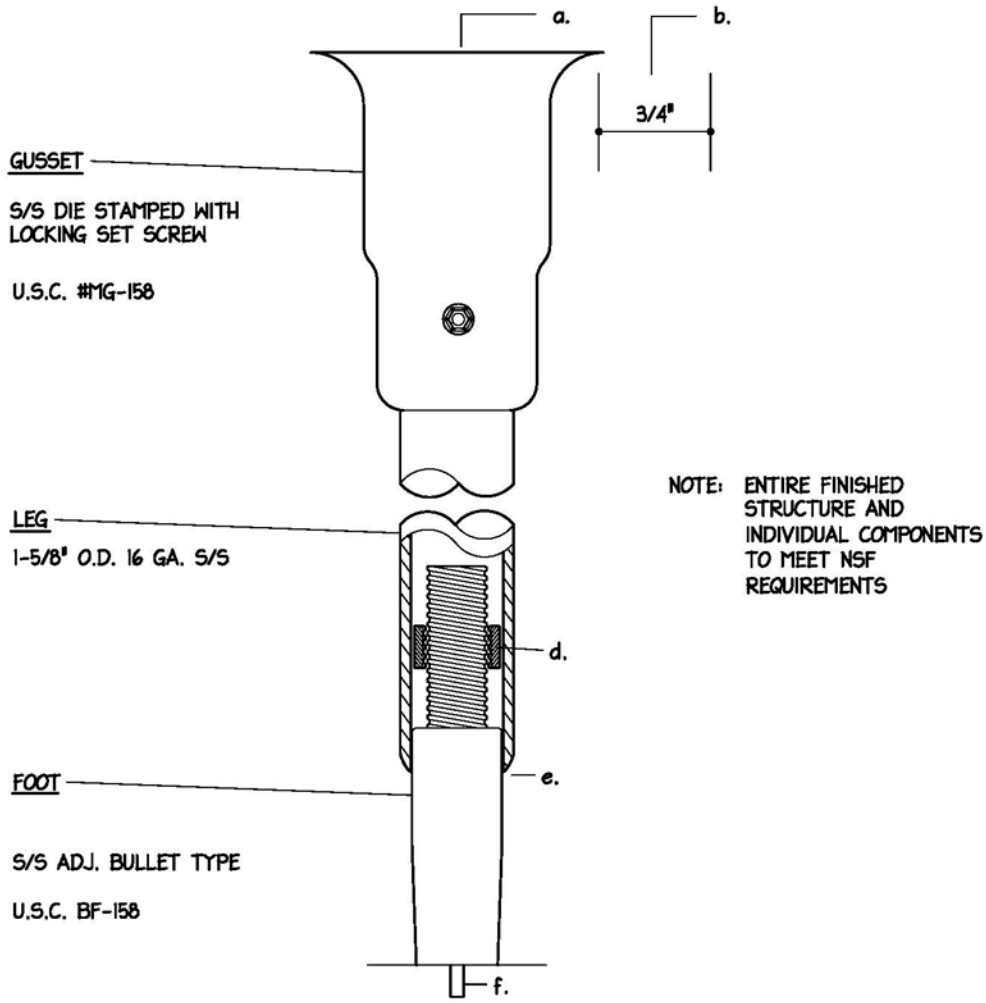

a. FULLY WELD GUSSET TO FRAMEWORK OR SINK
b. 3/4" MINIMUM CLEARANCE ALL AROUND
c. SET SCREW NOT VISIBLE TO WORKING SIDE OF EQUIPMENT.
d. MAXIMUM 1/32" CLEARANCE BETWEEN LEG AND FOOT
e. FOOT SET AT MIDPOINT TO ALLOW 1" ADJUSTMENT UP AND 1" DOWN. WITHOUT THREAD EXPOSURE.
f. LEGS UNSUPPORTED LATERALLY BY CROSSBACKING OR UNDERSHELVES SHALL BE PINNED TO FLOOR USING 1/4" DIA. X 1/2" PINS WELDED TO FOOT AND SET IN MATCHING HOLES IN THE FLOOR.

NYIKOS ASSOCIATES, INC. Food Facilities Design/Consulting	DESCRIPTION: TABLE & SINK LEGS	STANDARD DTL: 1.07

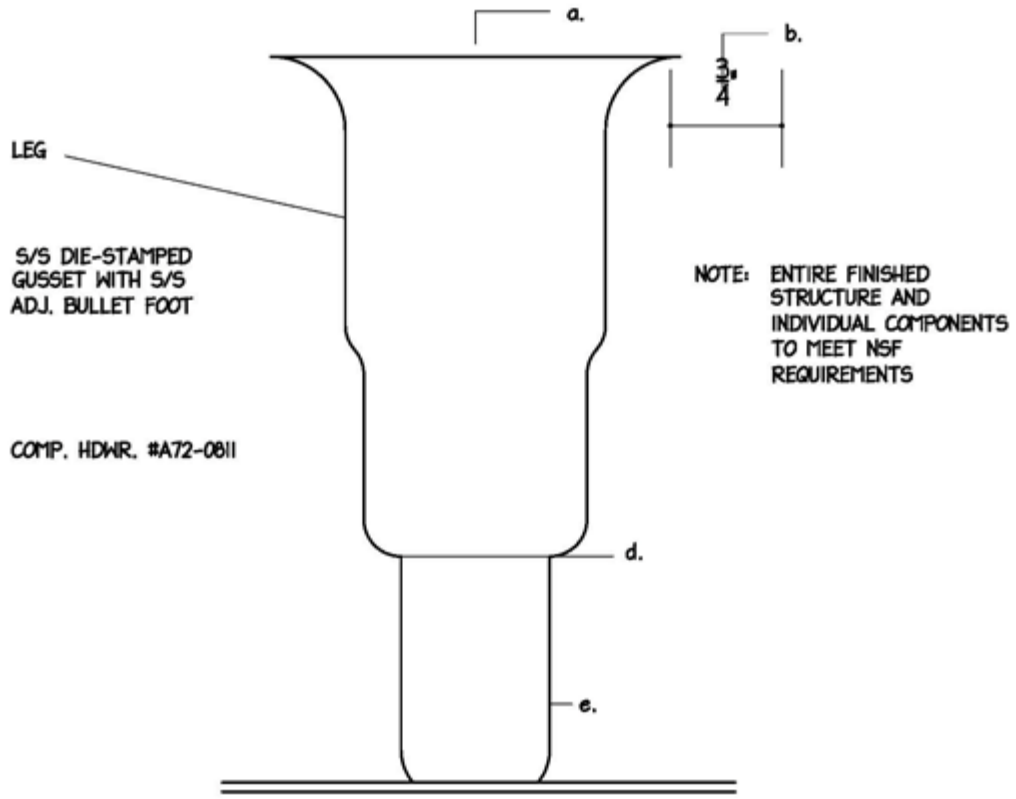

a. FULLY WELD TO FRAMEWORK CHANNEL

b. 3/4" MINIMUM CLEARANCE ALL AROUND

d. MAXIMUM 1/32" CLEARANCE BETWEEN LEG AND FOOT

e. FOOT SET AT MIDPOINT TO ALLOW 1" ADJUSTMENT UP AND 1" DOWN. WITHOUT THREAD EXPOSURE.

NYIKOS ASSOCIATES, INC. Food Facilities Design/Consulting	DESCRIPTION: COUNTER LEGS	STANDARD DTL: 1.08

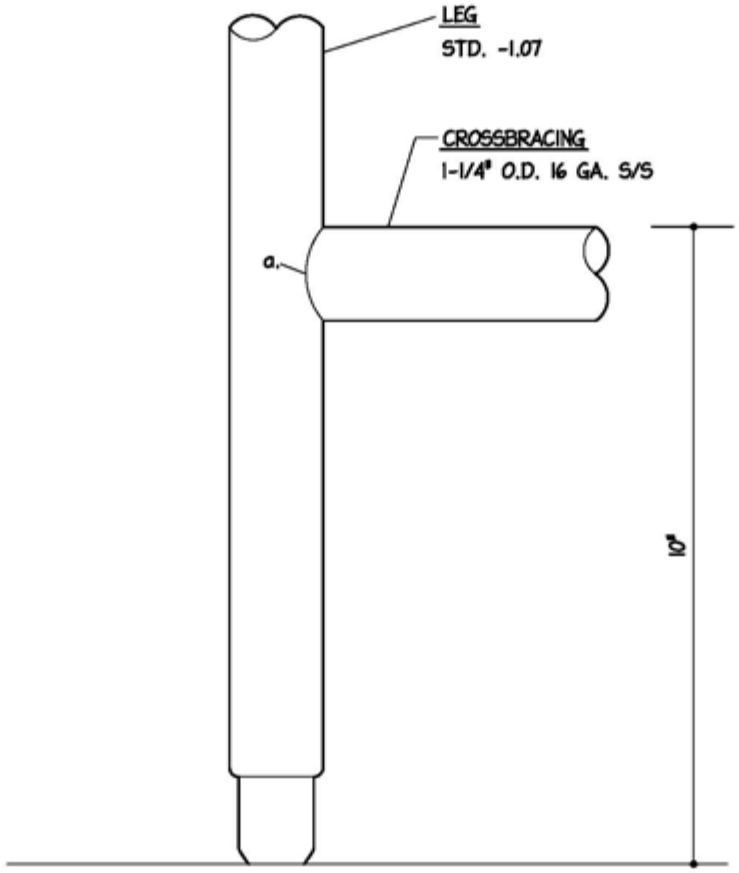

a. FULLY WELD, GRIND SMOOTH AND POLISH.

NYIKOS ASSOCIATES, INC. Food Facilities Design/Consulting	DESCRIPTION: CROSSBRACING	STANDARD DTL: 1.10

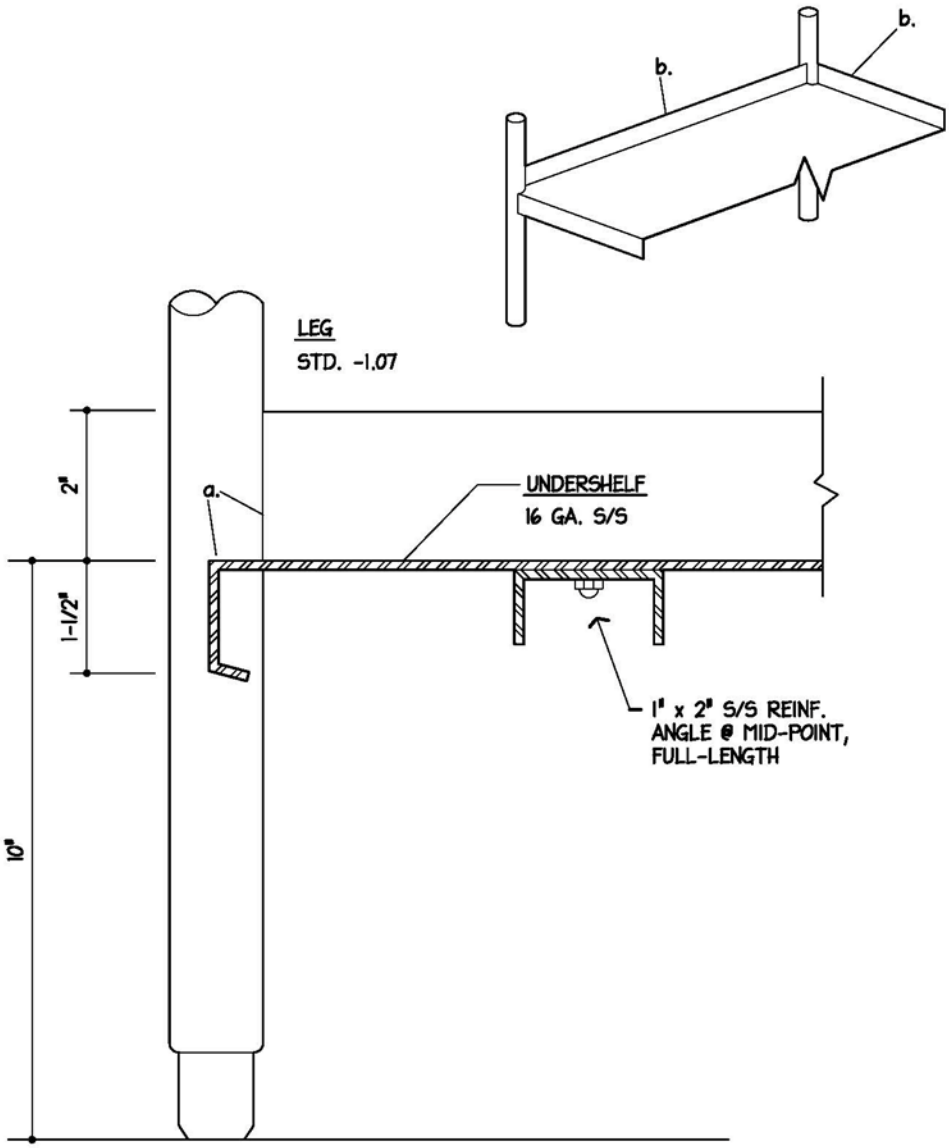

a. FULLY WELD, GRIND SMOOTH AND POLISH.

b. WHEN SPECIFIED, TURN REAR AND ENDS UP 2".

NYIKOS ASSOCIATES, INC. Food Facilities Design/Consulting	DESCRIPTION: UNDERSHELF	STANDARD DTL: 1.11

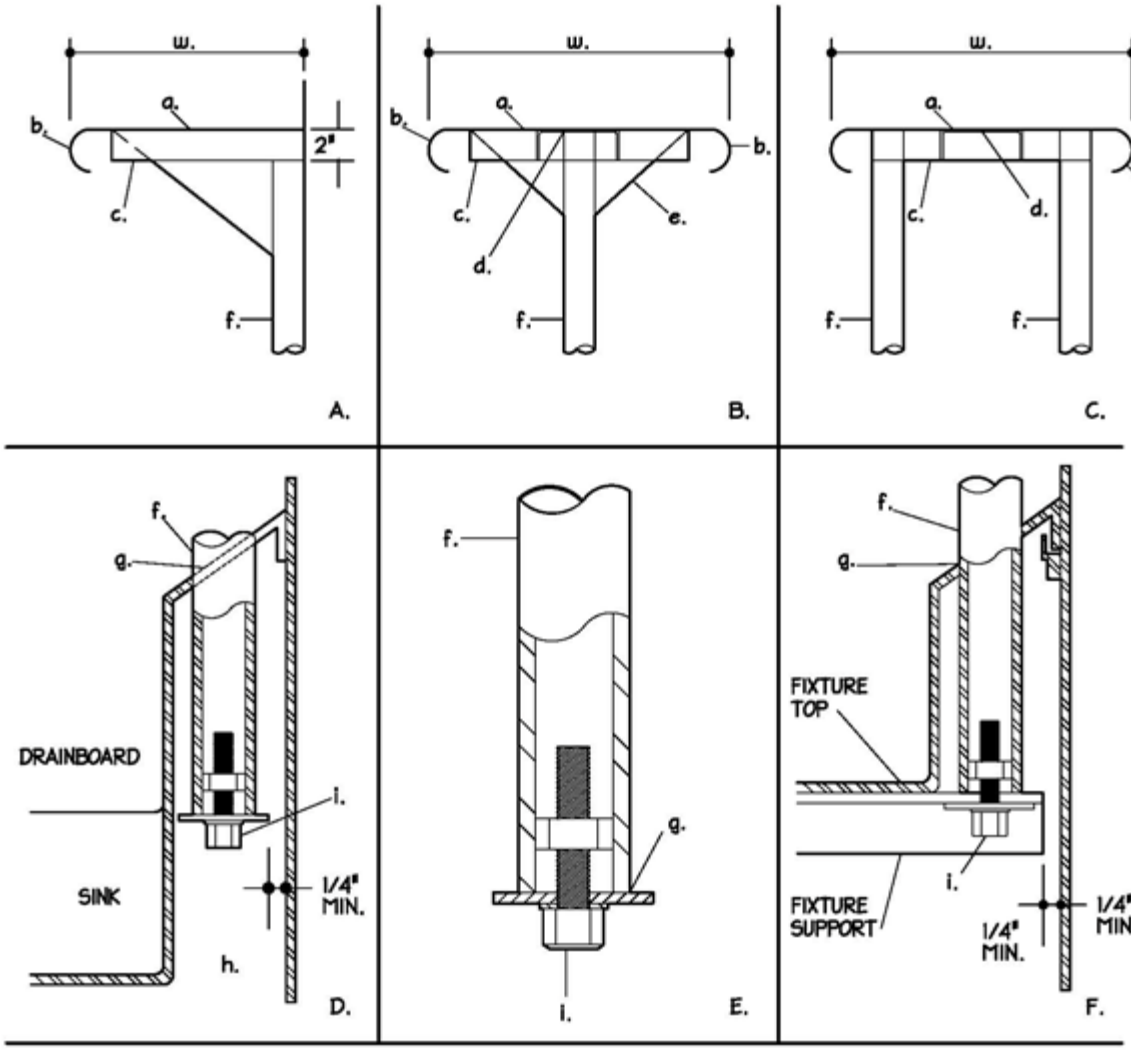

a. 16 GA S/S SHELF
b. STD.- 1.02 EDGE
c. 1"x 3"x 1" 14 GA. S/S CROSS CHANEL
d. 1"x 3"x 1" 14 GA. S/S LENGTHWISE CHANNEL WHEN LENGTH BETWEEN SUPPORTS EXCEEDS 42"
e. 14 GA. S/S BRACKETS FULLY WELDED TO SUPPORT AND CHANNEL..
f. 1-1/4" O.D. 16 GA. S/S UPRIGHT. MAXIMUM 5'-0" ON CENTER.
g. TIGHT FIT. SEAL WITH SILICONE SEALANT.
h. 1-1/2"x 1-1/2" 12 GA. S/S CLIPS WELDED TO REAR OF SPLASH AT DRAINBOARD HEIGHT.
i. 3/8"x 16 S.S. HEX HEAD BOLT, S/S NUT & S/S LOCKWASHER. NUT WELDED IN TUBE.
w. WIDTH AS SPECIFIED.

NYIKOS ASSOCIATES, INC. Food Facilities Design/Consulting	DESCRIPTION: OVERSHELVES & SUPPORTS	STANDARD DTL: 1.12

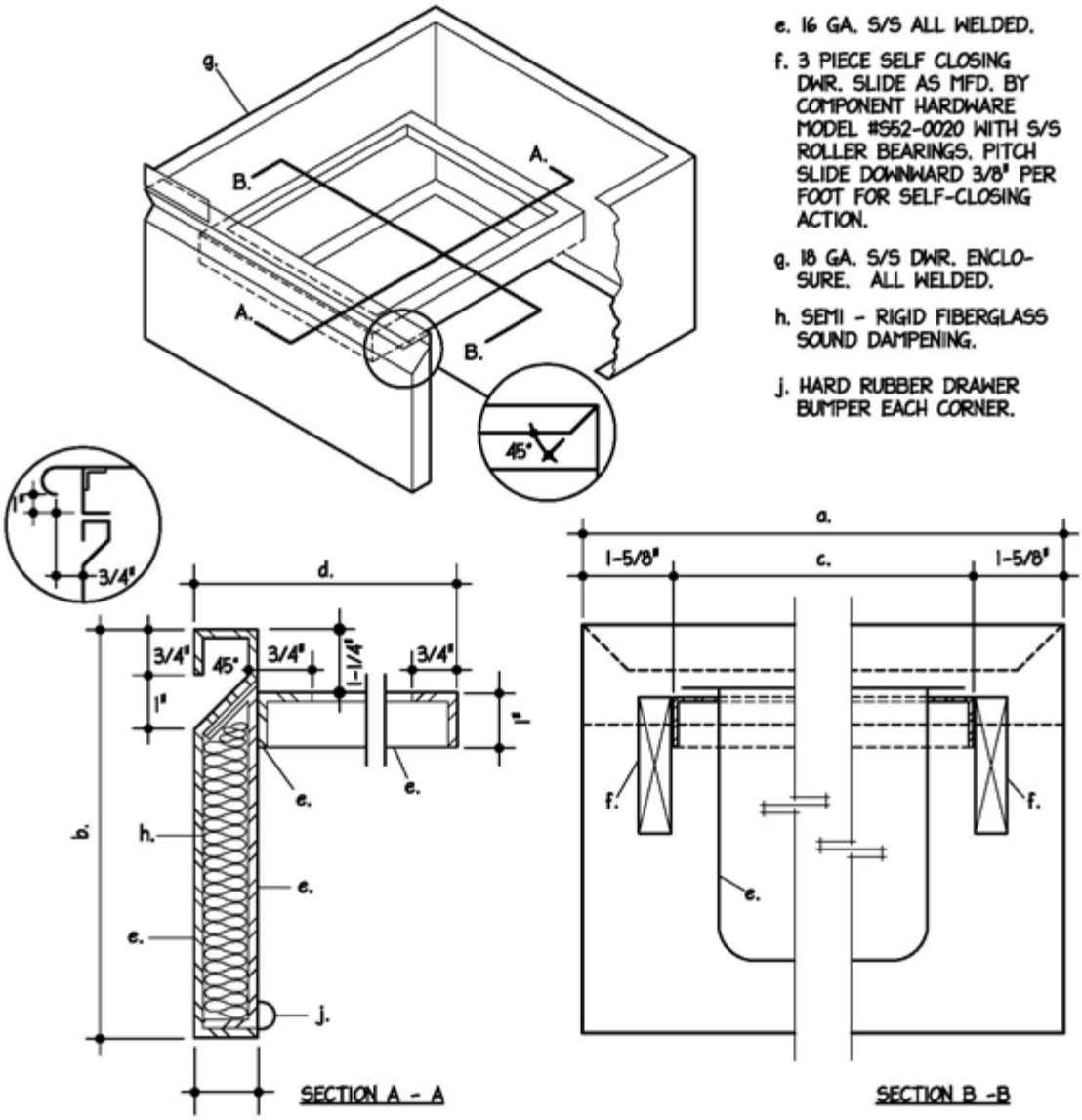

e. 16 GA. S/S ALL WELDED.

f. 3 PIECE SELF CLOSING DWR. SLIDE AS MFD. BY COMPONENT HARDWARE MODEL #552-0020 WITH S/S ROLLER BEARINGS. PITCH SLIDE DOWNWARD 3/8" PER FOOT FOR SELF-CLOSING ACTION.

g. 18 GA. S/S DWR. ENCLOSURE. ALL WELDED.

h. SEMI - RIGID FIBERGLASS SOUND DAMPENING.

j. HARD RUBBER DRAWER BUMPER EACH CORNER.

i. PROVIDE DIE - STAMPED #18 GA. S/S DWR. PANS AS FOLLOWS:

TYPE	NO.	PANS	a.	b.	c.	d.
I	1	20x20x5 DP.	25	7-1/2	21-3/4	22-3/4
II	1	20x20x8 DP.	25	10-1/2	21-3/4	22-3/4
III	1	12x20x4 DP.	25	6-1/2	21-3/4	14-1/2
IV	2	12x20x4 DP.	28	6-1/2	26-1/4	22-1/2
V	1	12x20x4 DP.	17	13-1/2	13-1/2	22-1/2

NYIKOS ASSOCIATES, INC.
Food Facilities Design/Consulting

DESCRIPTION: DRAWERS

STANDARD DTL: 1.14

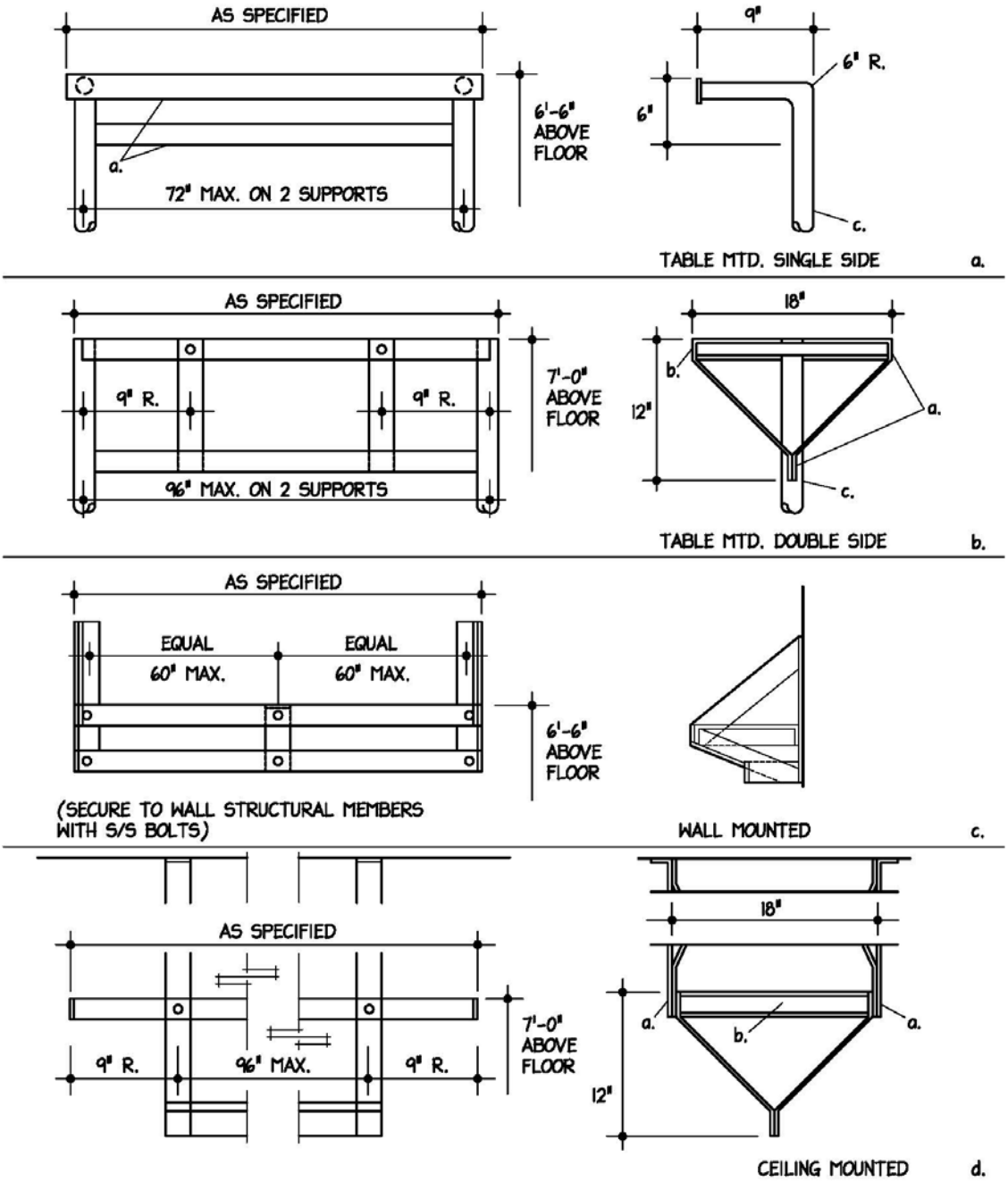

RACKS TO BE ALL WELDED CONSTRUCTION, GROUND SMOOTH AND POLISHED

a. BANDS - 1/4"x2 S/S BAR.
b. SPREADERS - 1" O.D. 16 GA. S/S.
c. UPRIGHTS - 1-5/8" O.D. 16 GA. S/S.
d. HOOKS - S/S DOUBLE PRONG SNAP-OVER STANDARD KEIL - #1576-1010-1351, 6" O/C.

NYIKOS ASSOCIATES, INC. Food Facilities Design/Consulting	DESCRIPTION: POT RACKS	STANDARD DTL: 1.18

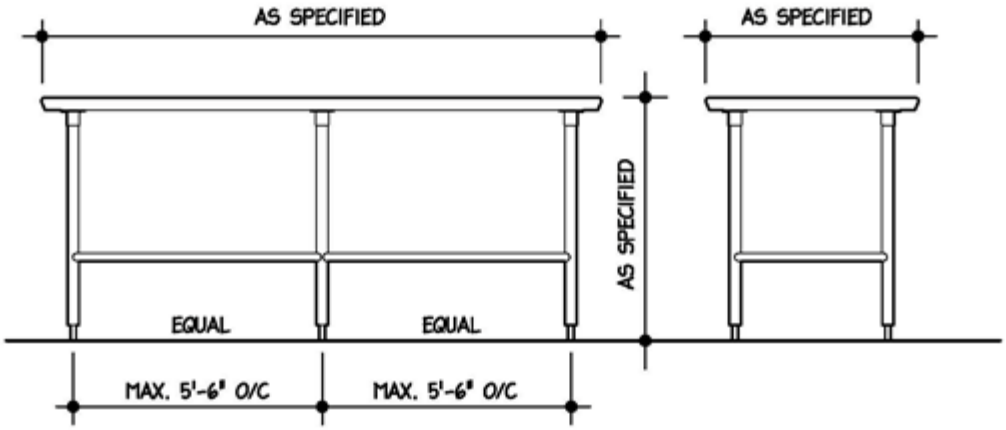

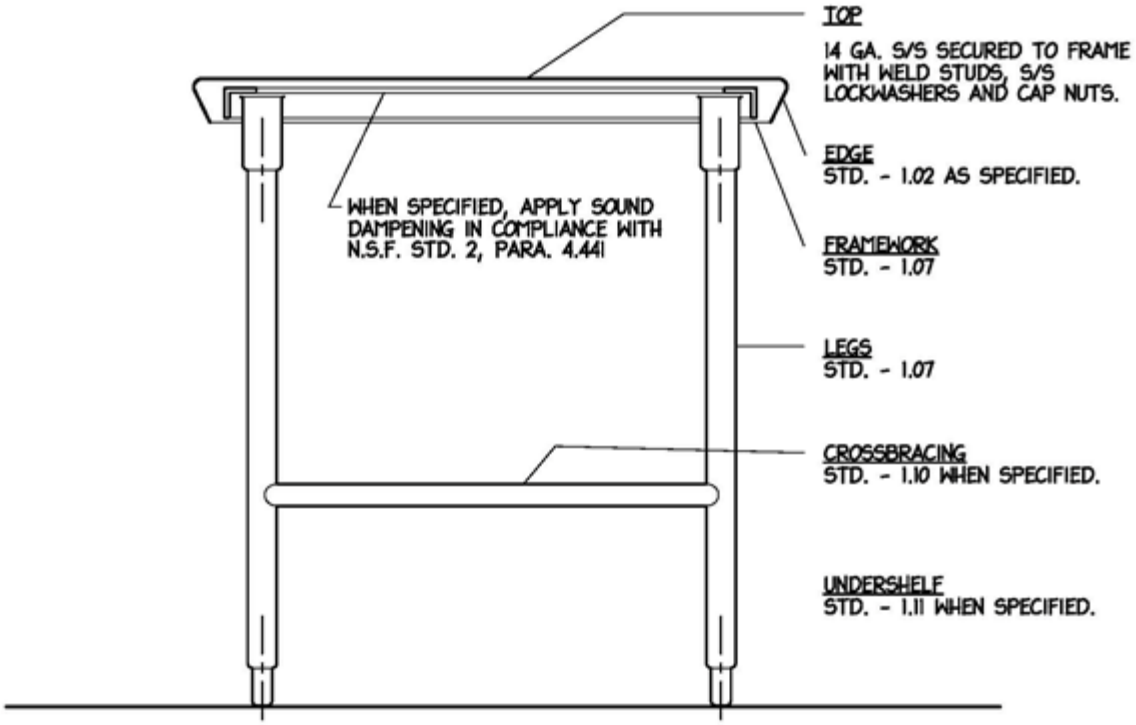

NYIKOS ASSOCIATES, INC. Food Facilities Design/Consulting	DESCRIPTION: WORKTABLE	STANDARD DTL: 2.01

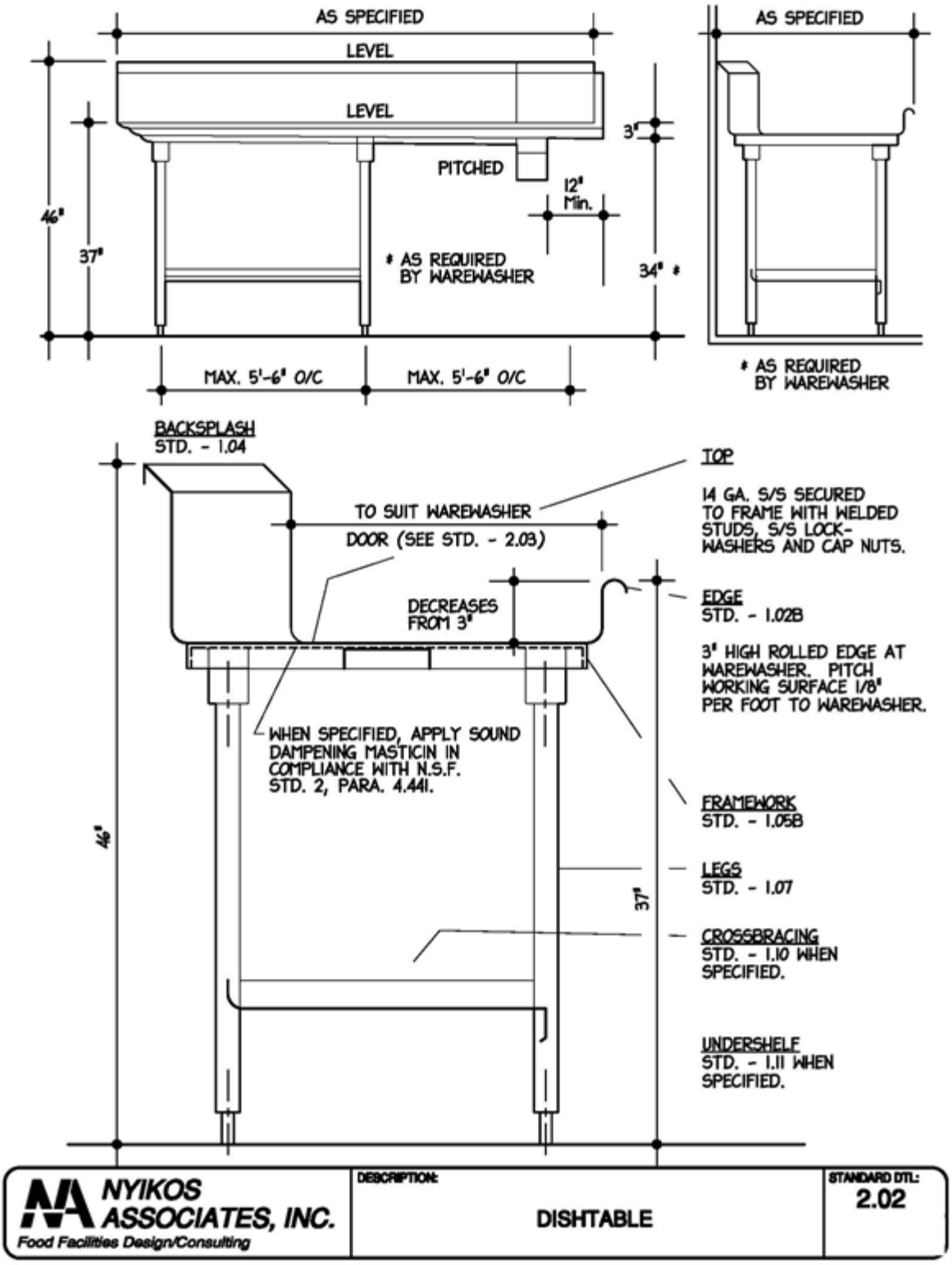
AS SPECIFIED
LEVEL
LEVEL
3"
PITCHED
12" Min.
46"
37"
* AS REQUIRED BY WAREWASHER
34" *
MAX. 5'-6" O/C
MAX. 5'-6" O/C
AS SPECIFIED
* AS REQUIRED BY WAREWASHER
BACKSPLASH STD. - 1.04
TOP
14 GA. S/S SECURED TO FRAME WITH WELDED STUDS, S/S LOCK-WASHERS AND CAP NUTS.
TO SUIT WAREWASHER
DOOR (SEE STD. - 2.03)
DECREASES FROM 3"
EDGE STD. - 1.02B
3" HIGH ROLLED EDGE AT WAREWASHER. PITCH WORKING SURFACE 1/8" PER FOOT TO WAREWASHER.
WHEN SPECIFIED, APPLY SOUND DAMPENING MASTICIN IN COMPLIANCE WITH N.S.F. STD. 2, PARA. 4.441.
FRAMEWORK STD. - 1.05B
46"
LEGS STD. - 1.07
37"
CROSSBRACING STD. - 1.10 WHEN SPECIFIED.
UNDERSHELF STD. - 1.11 WHEN SPECIFIED.
NYIKOS ASSOCIATES, INC.
Food Facilities Design/Consulting
DESCRIPTION:
DISHTABLE
STANDARD DTL:
2.02

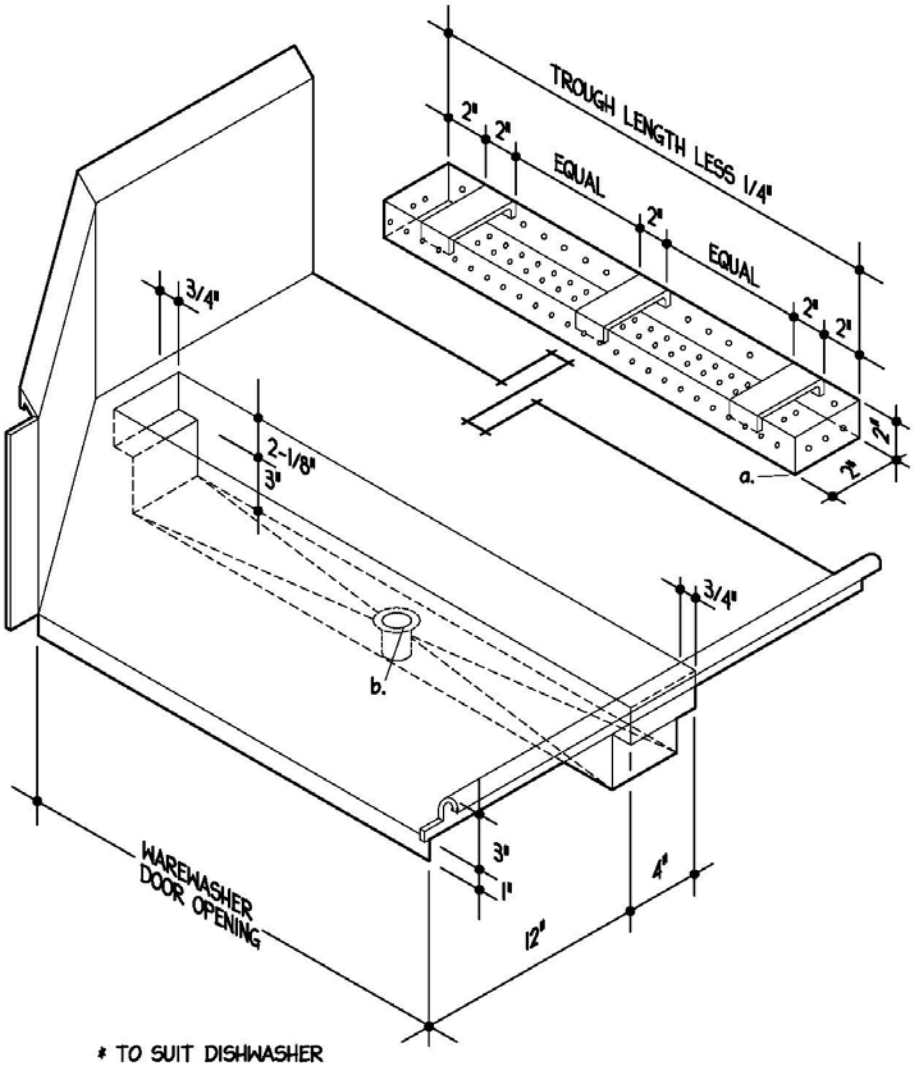

a. BASKET - 16 GA. PERFORATED S/S, ALL WELDED CONSTRUCTION.

b. WASTE - 1-1/2" CHROME PLATED BRASS DRAIN -- STANDARD-KEIL #1816-1812-1368

NYIKOS ASSOCIATES, INC. Food Facilities Design/Consulting	DESCRIPTION: WAREWASHER CONNECTION AND TABLE TROUGH	STANDARD DTL: 2.03

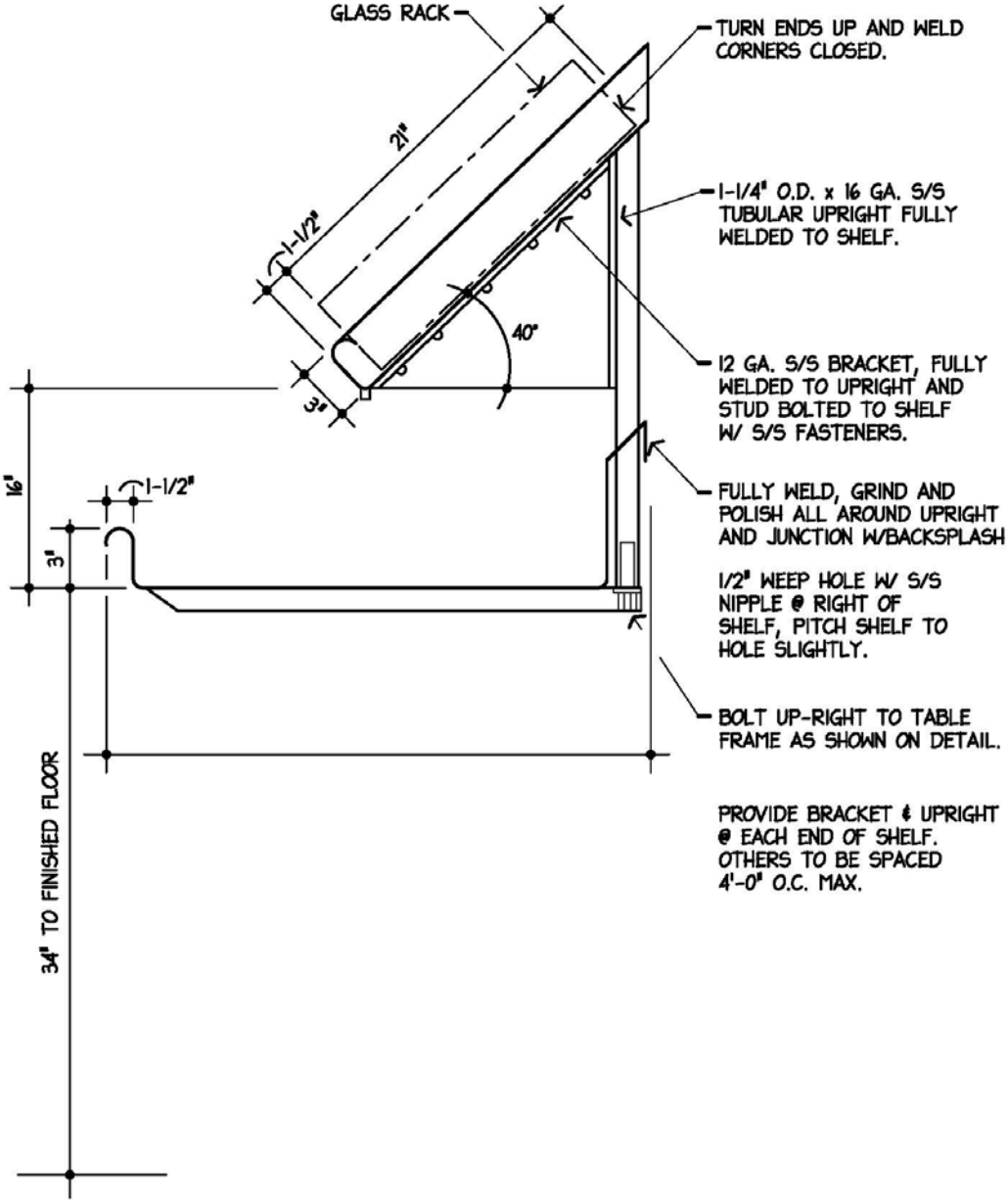

NYIKOS ASSOCIATES, INC. Food Facilities Design/Consulting	DESCRIPTION: TABLE MOUNTED RACKING SHELF	STANDARD DTL: 2.17

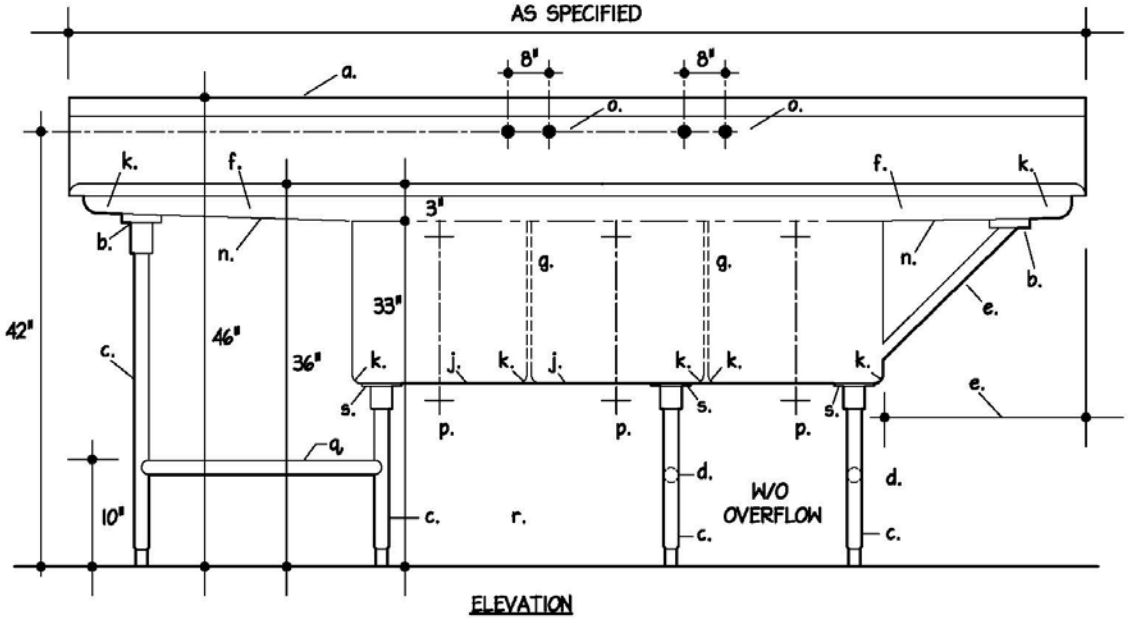

ELEVATION

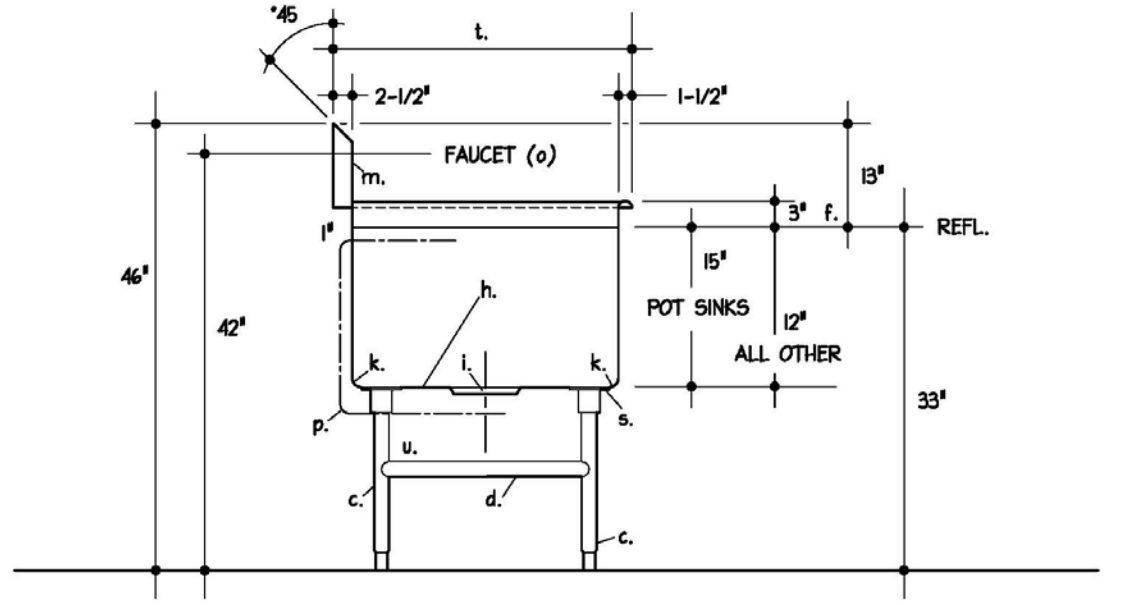

TYPICAL SECTION

a. MATERIAL - 14 GA. S/S.
b. STD. - 1.05c.
c. STD. - 1.07
d. STD. - 1.10

CONTINUED ON STD.- 3.01.1

NYIKOS ASSOCIATES, INC. Food Facilities Design/Consulting	DESCRIPTION: SINKS AND DRAINBOARDS	STANDARD DTL: 3.01

e. DRAINBOARDS UP TO 24" IN LENGTH REQUIRE NO LEGS OR BRACES. DRAINBOARDS 25" TO 30" REQUIRE 1" O.D. 16 GA. S/S BRACE. DRAINBOARDS OVER 30" REQUIRE LEGS AND CHANNEL FRAMEWORK.

f. DRAINBOARDS SHALL PITCH TO SINK 1/8" PER FOOT OF LENGTH TO PROVIDE COMPLETE DRAINING WITHOUT POOLING. THE 3" HIGH RAISED ROLLED RIM AT THE SINK SHALL DECREASE IN HEIGHT TOWARD THE OUTER ENDS OF THE DRAINBOARD.

g. PARTITIONS BETWEEN COMPARTMENTS TO BE DOUBLE WALLED CONSTRUCTION WITH ROUNDED TOP, ALL WELDED INTEGRAL WITH SINK BODY.

h. BACK, BOTTOM, AND FRONT SHALL BE ONE CONTINUOUS PIECE WITH ENDS WELDED INTEGRAL, WITHOUT OVERLAPPING JOINTS OR OPEN SPACES, BETWEEN COMPARTMENTS.

i. WASTES SHALL BE SEATED IN DIE STAMPED DEPRESSIONS WITHOUT USE OF SOLDER, RIVETS OR WELDING. INSTALLED COMPONENTS SHALL BE FLUSH WITH SURROUNDING SURFACE.

j. EACH SINK COMPARTMENT TO BE PITCHED AND CREASED TO WASTE TO ASSURE COMPLETE DRAINING WITHOUT POOLING.

k. ENTIRE UNIT SHALL BE ALL WELDED COVE CORNERED CONSTRUCTION WITH VERTICAL AND HORIZONTAL AND INTERIOR CORNERS HAVING A 3/4" RADIUS.

l. STD.- 1.02 b EDGE.

m. STD. - 1.04a. BACKSPLASH.

n. UNDERSIDE OF DRAINBOARDS AND SINKS TO BE SPRAYED WITH SOUND DAMPENING IN COMPLIANCE WITH N.S.F. STD. 2 PARA 4.441 WHEN SPECIFIED.

o. FAUCETS - T&S MODEL B-232 WITH AERATOR B-199, REMOVABLE MONEL SEATS AND 1/2" I.P.S. MALE INLETS.

p. WASTES - 2" NICKEL PLATED BRONZE ROTARY HANDLE WASTE S/S STRAINER PLATE WITH CHROME WITH CHROME PLATED BRASS CONNECTED OVERFLOW, STANDARD- KIEL HARDWARE MFG. CO. #1770-1015-1000.

q. REAR CROSS BRACING ONLY.

r. OMIT FRONT AND REAR LENGTHWISE CROSSBRACIG UNDER SINKS.

s. 12 GAUGE STAINLESS STEEL 6"x 6" TRIANGULAR SUPPORT PLATE WELDED TO UNDERSIDE OF SINKS.

t. WIDTH AS SPECIFIED.

NYIKOS ASSOCIATES, INC. Food Facilities Design/Consulting	DESCRIPTION: SINK AND DRAINBOARDS	STANDARD DTL: 3.01.1

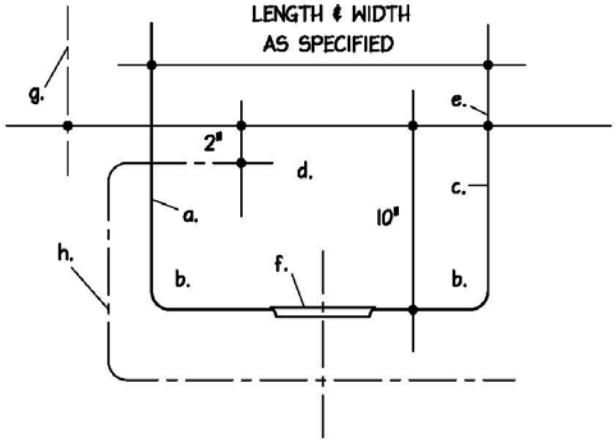

TYPICAL SECTION

a. MATERIAL - 14 GA. S/S

b. ENTIRE UNIT SHALL BE ALL WELDED COVE CORNERED CONSTRUCTION WITH VERTICAL AND HORIZONTAL AND INTERIOR CORNERS HAVING A 3/4" RADIUS.

c. TWO SIDES AND BOTTOM SHELL BE ONE CONTINUOUS PIECE WITH ENDS WELDED INTEGRAL WITHOUT OVERLAPPING JOINTS.

d. PARTITIONS BETWEEN COMPARTMENTS TO BE DOUBLE WALLED CONSTRUCTION WITH ROUNDED TOP, ALL WELDED INTEGRAL WITH SINK.

e. FULLY WELD SINK TO TOP WITHOUT OVERLAPPING JOINTS.

f. WASTES SHALL BE SEATED IN DIE STAMPED DEPRESSIONS WITHUOT USE OF SOLDER RIVETS OR WELDING . INSTALLED COMPONENTS SHALL BE FLUSH WITH SURROUNDING SURFACE.

g. FAUCET - T&S MODEL B-222 FAUCET WITH B-199 AERATOR, REMOVABLE MONEL SEATS AND 1/2" IPS MALE INLETS.

h. WASTES - 1-1/2" NICKEL PLATED BRONZE ROTARY HANDLE WASTE AND S/S STRAINER PLATE WITH CHROME PLATED BRASS CONNECTED OVERFLOW, STANDARD-KEIL HARDWARE COMPANY NO. #1770-1015-1000.

NYIKOS ASSOCIATES, INC. Food Facilities Design/Consulting	DESCRIPTION: COUNTER TOP SINKS	STANDARD DTL: 3.04

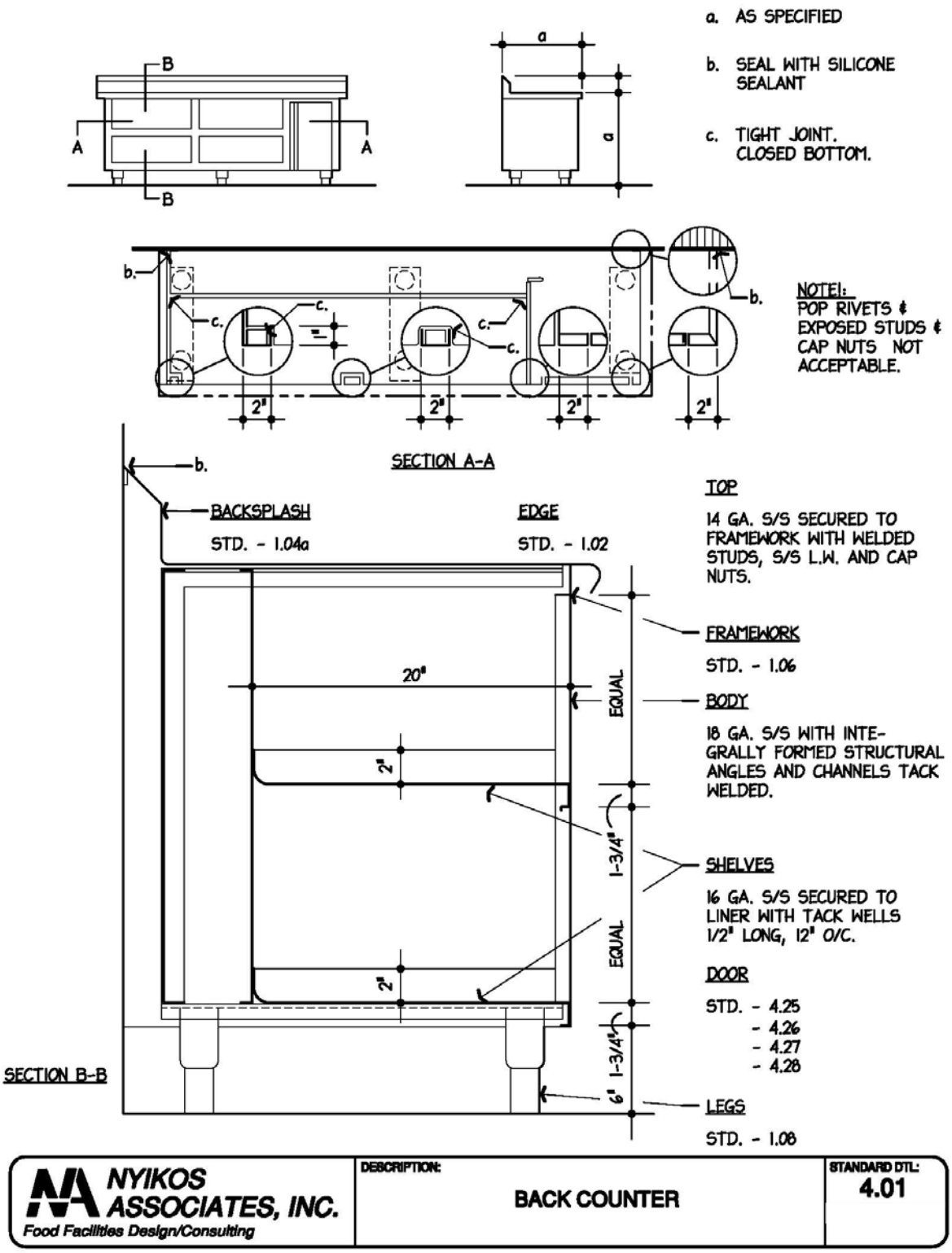
a. AS SPECIFIED
b. SEAL WITH SILICONE SEALANT
c. TIGHT JOINT. CLOSED BOTTOM.
NOTE!: POP RIVETS & EXPOSED STUDS & CAP NUTS NOT ACCEPTABLE.
SECTION A-A
BACKSPLASH
STD. - 1.04a
EDGE
STD. - 1.02
TOP
14 GA. S/S SECURED TO FRAMEWORK WITH WELDED STUDS, S/S L.W. AND CAP NUTS.
FRAMEWORK
STD. - 1.06
BODY
18 GA. S/S WITH INTEGRALLY FORMED STRUCTURAL ANGLES AND CHANNELS TACK WELDED.
SHELVES
16 GA. S/S SECURED TO LINER WITH TACK WELLS 1/2" LONG, 12" O/C.
DOOR
STD. - 4.25
- 4.26
- 4.27
- 4.28
LEGS
STD. - 1.08
SECTION B-B
20"
EQUAL
1-3/4"
6"
NYIKOS ASSOCIATES, INC.
Food Facilities Design/Consulting
DESCRIPTION:
BACK COUNTER
STANDARD DTL:
4.01

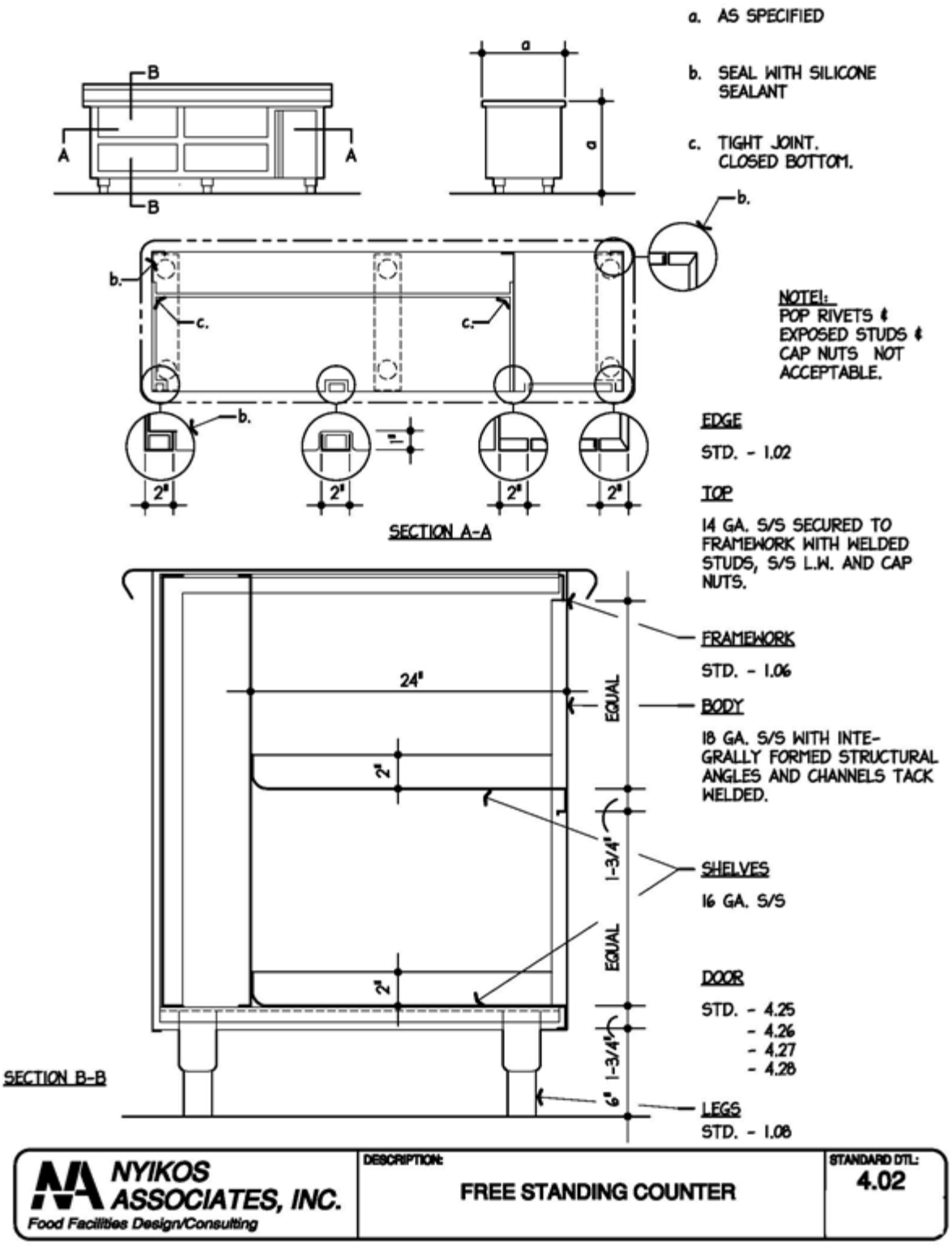
a. AS SPECIFIED
b. SEAL WITH SILICONE SEALANT
c. TIGHT JOINT. CLOSED BOTTOM.
NOTE:
POP RIVETS & EXPOSED STUDS & CAP NUTS NOT ACCEPTABLE.
SECTION A-A
EDGE
STD. - 1.02
TOP
14 GA. S/S SECURED TO FRAMEWORK WITH WELDED STUDS, S/S L.W. AND CAP NUTS.
FRAMEWORK
STD. - 1.06
BODY
18 GA. S/S WITH INTEGRALLY FORMED STRUCTURAL ANGLES AND CHANNELS TACK WELDED.
SHELVES
16 GA. S/S
DOOR
STD. - 4.25
- 4.26
- 4.27
- 4.28
LEGS
STD. - 1.08
SECTION B-B
24"
EQUAL
1-3/4"
6"
NYIKOS ASSOCIATES, INC.
Food Facilities Design/Consulting
DESCRIPTION:
FREE STANDING COUNTER
STANDARD DTL:
4.02

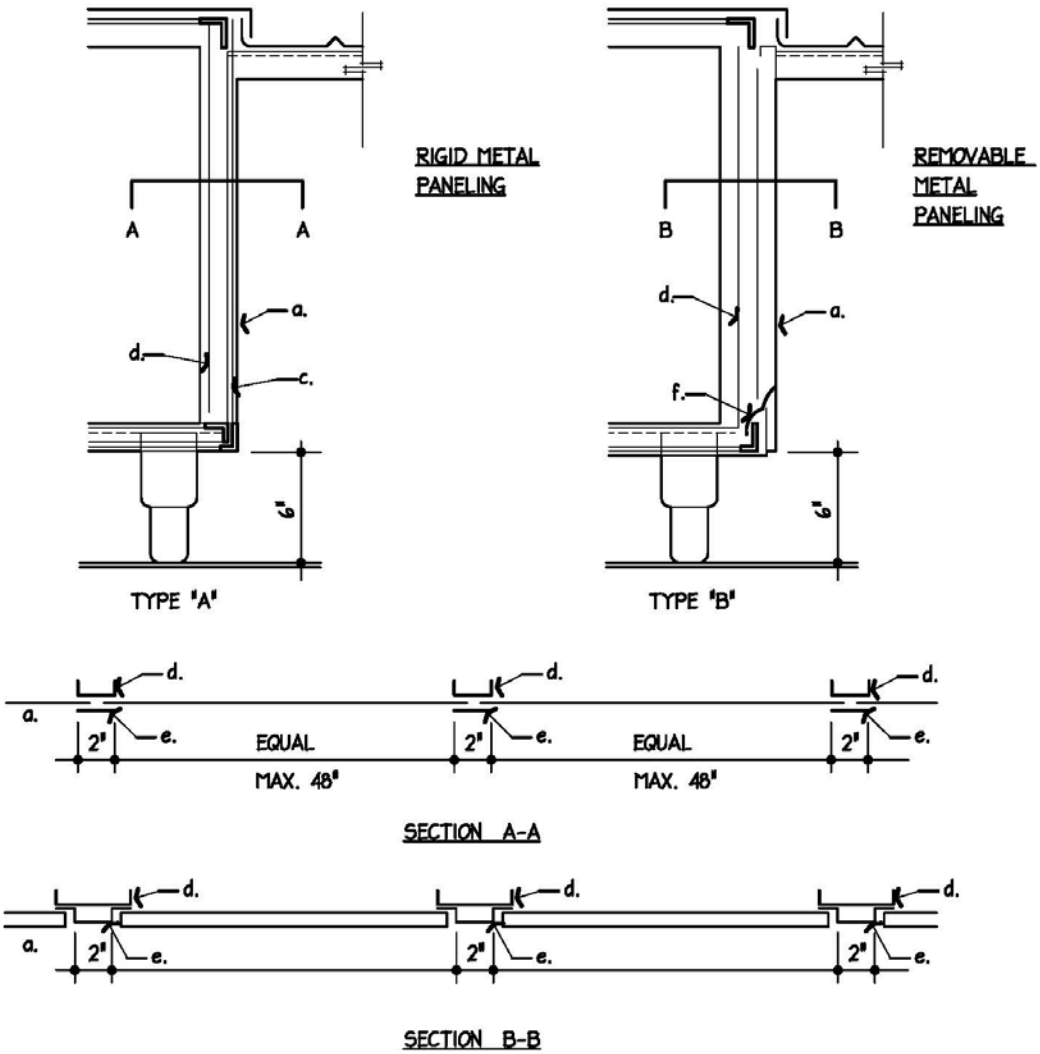

a. PANELING - 18 GA. S/S (18 GA. GALV. W/BONDED COVERING WHEN SPECIFIED).
b. 1"x2"x1" 14 GA. GALV. CHANNEL FULLY WELDED TO FRAMEWORK.
c. 2" 12 GA. S/S MULLIONS SECURED WITH WELDED STUDS, S/S LOCKWASHERS AND CAP NUTS.
d. 1"x4"x1" 14 GA. GALV. CHANNEL FULLY WELDED TO FRAMEWORK.
e. 1"x1"x2"x1"x1" 14 GA. S/S HAT CHANNEL (MULLIONS) SECURED WITH WELDED STUDS, S/S LOCKWASHERS AND CAP NUTS.
f. S/S CLIP.

NYIKOS ASSOCIATES, INC. Food Facilities Design/Consulting	DESCRIPTION: CAFETERIA COUNTER FRONT PANELING METAL	STANDARD DTL: 4.05

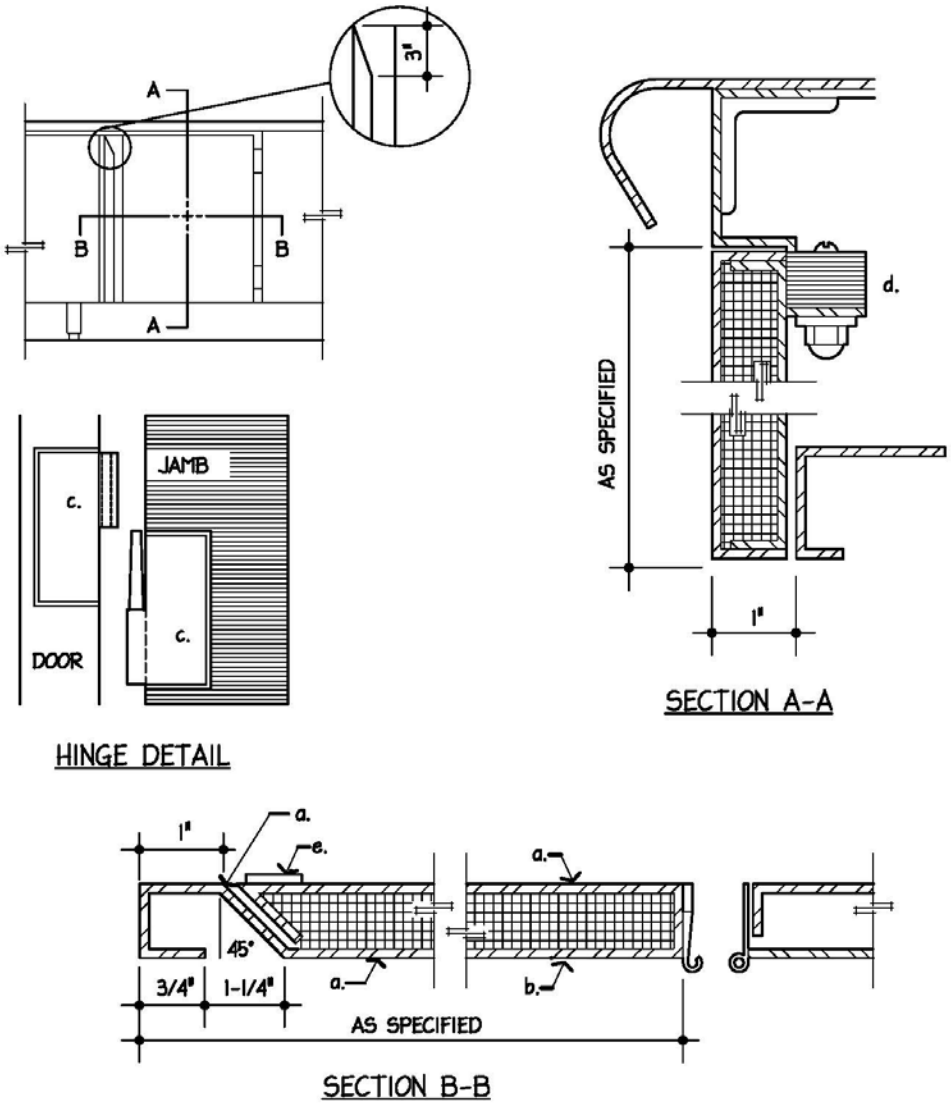

a. PANELING - 18 GA. S/S GA. EXTERIOR AND INTERIOR PANS TACK WELDED.

b. SEMI-RIGID FIBERGLASS SOUND DAMPENING.

c. HEAVY-DUTY S/S CLIP JOINT HINGE AS MFD. BY STANDARD-KEIL. SET IN FLUSH WITH SURFACE OF DOOR AND JAMB AND WELDED IN PLACE.

d. STANDARD-KEIL #2932-1010-3000 MAGNETIC CATCH MOUNTED FLUSH IN CUT OUT ON 1" TURN DOWN.

e. STEEL PLATE FOR MAGNETIC CATCH TACK WELDED TO INTERIOR DOOR PAN.

NYIKOS ASSOCIATES, INC. Food Facilities Design/Consulting	DESCRIPTION: HINGED SOLID DOOR	STANDARD DTL: 4.26

(END OF SECTION 114000)

SECTION 11 5313
FUME HOODS

PART 1 - GENERAL

1.01 SECTION INCLUDES

A. Laboratory fume hoods, bench type, auxiliary air configurations as shown and described.

1.02 RELATED SECTIONS

A. Section 12 35 53.19: Laboratory casework.

B. Division 22: Plumbing and service fittings to fume hoods.

C. Division 26: Electrical service fittings to fume hoods.

1.03 SUBMITTALS

A. Shop drawings.

B. Manufacturer's product data.

C. Testing reports on all finishes.

D. Testing reports on ventilation characteristics for auxiliary air hoods.

E. Samples of finishes for color selection.

F. Manufacturer's standard rough-in diagram.

G. Production schedule, including projected shipping dates for each hood.

PART 2 - PRODUCTS

2.01 MANUFACTURERS

A. Basis of Design: Supreme Air ADA Bench Hood by Kewaunee Scientific Equipment Corp.

B. Other manufacturers of 4 foot Bypass Hoods, approved provided meeting requirements:
   1. Laboratory Furniture, Inc.
   2. American Desk Manufacturing Co./Taylor Division
   3. American Hamilton, Div. of American Hospital Supply Corp.
   4. Duralab Equipment Corp.
   5. St. Charles Manufacturing Co.
   6. Fisher Scientific Co.
   7. Labland Industries

C. Compliance with Contract Documents: Approval of a manufacturer does not relieve him from providing products in full compliance with the Contract Documents.

2.02 HOODS

A. ADA Bench By-pass Hoods:
   1. Superstructure: Cold-rolled steel, phosphate coated, with baked chemical resistant synthetic resin finish. Provide 1/3" or 1" I. D. piping sleeves, with screw-type caps on both ends in sides of hood where scheduled for entry of services and compressed gas tubing into hood.
   2. Base Cabinets: Wood. Refer to Sections 12 35 53.19.
      a. Maintain 30 inch minimum clear wheelchair access under hood.
   3. Interior Liner: Phenolic
   4. Counter Top: Molded modified epoxy resin with raised edge and sink(s) as shown.
   5. Sashes: Full metal frame counter-balanced combination vertical rising/ horizontal sash. Frame shall be min. 2-1/2" wide and glazing shall be 1/4" laminated safety plate. Sash in

horizontal sliding sashes shall permit a maximum opening of 30% of the face area with sash down.

6. Access Panels: Provide in sides of hood interior for access to services.
7. Lighting Fixtures: Two-tube fluorescent, vapor proof complete with tubes, light switch and wiring to switch.
8. Fan Switch: Provide complete with green safety light.
9. Fittings: Make provisions for side-mounted fittings for services as shown on the drawings.
10. Ductwork Connections: Provide ductwork collars as shown.

PART 3 - EXECUTION

3.01 INSTALLATION

A. Install all units as shown on the approved shop drawings.

B. Fabrication and installation shall be by experienced and qualified workmen in accordance with the approved shop drawings and manufacturer's recommendations.

C. All units shall be free from scratches, dents, etc., at acceptance of project.

D. Provide all wood blocking, grounds, shims, etc., for a complete installation. Include supports to building structure where required.

E. Provide all anchors, screws, bolts, etc., for securing work to adjacent or adjoining work. All anchorage to hollow concrete masonry units shall be by toggle bolts.

F. Erect all units in proper position, securely fastened, in line, plumb and level.

G. Shop prime all ferrous metal used for supports, brackets, etc., not exposed to view. Final finish shall be chemical resistant.

3.02 TESTING AND BALANCING

A. Provide certified tests on biochem safety hoods in the field to verify that units are operating as specified.

B. Air balancing of other hoods is in mechanical contract.

3.03 ADJUSTMENT AND CLEANING

A. All sashes and doors shall be adjusted for smooth, easy operating and shall have proper clearances for operation and be accurately and tightly fitted to jambs, sills, etc.

B. All moving or working parts shall be left in good smooth operating condition.

C. Leave the premises clean, orderly, and free of debris, dirt, and rubbish accumulated during installation of casework.

3.04 MAINTENANCE AND OPERATING INSTRUCTIONS

A. Supply personnel and time to adequately instruct Owner in operation of each fume hood.

B. Provide two sets of written operating and maintenance instructions for each hood.

END OF SECTION

SECTION 11 5415
KILNS

PART 1 - GENERAL

1.01 SECTION INCLUDES

A. Electric Kilns.

B. Downdraft ventilation system

C. Accessories.

1.02 RELATED SECTIONS

A. Section 26 0519 - Low-Voltage Electrical Power Conductors and Cables: Services and connections to kilns and ventilation systems.

1.03 DESIGN REQUIREMENTS

A. Install kiln in well-ventilated, sheltered area. Do not permit temperature to exceed 105 degrees F while kiln is in use.

B. Provide a minimum of 18 inches between kiln and adjacent walls, other kilns, shelving, and other obstructions. When installing multiple kilns in the same room, ensure that the control boxes on the kilns are not facing adjacent kilns.

C. Locate kiln in a room or space with a bare concrete floor. If a bare concrete floor is not available provide a non-combustible substrate and two inches of masonry below the kiln extending a minimum of 12 inches beyond the outside dimensions of the kiln.

D. If installing kilns in a room or space with a fire suppression system, do not place kilns in such a manner so as to cause sprinkler heads to go off.

E. If installing kilns in proximity to a marine environment, locate the kilns indoors and protect from exposure to damp air to avoid corrosion.

1.04 SUBMITTALS

A. Submit under provisions of Section 01 3300.

B. Product Data: Submit for kilns, ventilation systems, and accessories. Include product data, installation instructions, and manufacturer's recommendations.

C. Shop Drawings: Submit for kilns. Include plans indicating space required and relationship to work of other sections.

D. Operating and Maintenance Data: For kilns and ventilation systems to include in maintenance manuals.

E. Warranties: Special warranties specified in this section.

1.05 QUALITY ASSURANCE

A. Source Limitations: Obtain kilns, ventilation systems, and accessories through one source from a single manufacturer. Kiln and ventilation system to be UL listed as a system.

B. Regulatory Requirements: Comply with provisions of the following product certifications:

1. NFPA: Provide kilns and ventilation systems listed and labeled as defined in NFPA 70, Article 100, by a testing agency acceptable to authorities having jurisdiction, and marked for intended use.
2. UL and NEMA: Provide electrical components required as part of kilns and ventilation systems that are listed and labeled by UL and that comply with applicable NEMA standards.

1.06 DELIVERY, STORAGE AND HANDLING

A. Deliver kilns, ventilation systems, and accessories in manufacturer's original packaging with protective covering intact.

B. Do not stack other items on top of packaged kilns during transportation and storage. Stack kilns with top end up.

C. Utilize equipment capable of moving the kiln and packaging without damage and install kilns into location.

D. Protect from damage due to weather, excessive temperature, and construction operations.

1.07 WARRANTY

A. Special Warranties: Manufacturer's standard form in which manufacturer of each kiln specified agrees to repair or replace kilns that fail in materials or workmanship within specified warranty period. Warranty includes labor for repair or replacement.
   1. Kiln: Two-year limited warranty.

PART 2 - PRODUCTS

2.01 MANUFACTURERS

A. Basis-of-Design Product: The design for kilns, ventilation systems, and accessories is Skutt Kilns, 6441 SE Johnson Creek Blvd, Portland, OR 97206-9552, Telephone: 503-774-6000, Fax: 503-774-7833, Web Site: www.skutt.com.

B. Substitutions will be considered under provisions of Section 01 6000.

2.02 ELECTRIC KILNS

A. Electric Kilns: Manufacturer's Model No. KW1-1027electric kilns with components, options, and accessories needed to comply with requirements and provide complete functional kilns including the following components.
   1. Kiln stand.
   2. Kiln floor or slab.
   3. Fire brick.
   4. Kiln elements.
   5. Ring latch.
   6. Chest handle.
   7. Lid with lifter and latch.
   8. Control box.
   9. Thermocouple.
   10. Controller touch pad.
   11. Peep plugs.

B. Factory prewire kilns for electrical switching devices and computer interface system. Factory predrill holes in the kiln lid and floor for the downdraft ventilation system.

2.03 DOWNDRAFT VENTILATION SYSTEM

A. Downdraft Ventilation System: Skutt "EnviroVent 2-inch negative pressure downdraft ventilation system; capable of removing hazardous fumes only, not heat. System to consist of the following components:
   1. Blower motor with six (6) ft power cord and in-line switch.
   2. 8 x 12 inch mounting plate.
   3. Eight (8) ft x three (3) inch flexible aluminum duct.
   4. Spring-loaded plenum cup assembly.

5. Blower inlet tube.
6. Blower discharge tube.
7. Plenum spring.
8. Three (3) to four (4) inch connector.
9. Floor mounting plate.
10. Mounting hardware.

B. System fits a single top-loading, multi-sided, electric kiln with a chamber size less than 12 cu ft. Provide a dual intake kit to vent a single kiln over 12 cu ft or two (2) kilns with chamber volumes each under 12 cu ft. Maximum chamber volume that can be vented with one (1) motor is 24 cu ft.

C. Electrical Switching Device: Skutt "EnviroLink" electrical switching device utilizing a programmable power output in the controller to turn the downdraft ventilation system on and off.

2.04 ACCESSORIES

A. Angled Touchpad Mount: Skutt "Easyview" Angled Touchpad; permits easy viewing and programming of kiln controls.

B. Computer Interface System (CIS): Computer interface system including required software and hardware to connect a computer to the kiln controller.

C. Furniture Kits: Kit includes shelves and one (1) or more posts. Kits are designed to fire to Cone 10 temperatures.

PART 3 - EXECUTION

3.01 EXAMINATION

A. Examine substrates, areas, and conditions where kilns, ventilation systems, and accessories, for compliance with requirements that affect installation and with requirements for installation tolerances. Notify the Architect in writing of conditions detrimental to proper completion of the work. Do not proceed with work until unsatisfactory conditions have been corrected.

3.02 PREPARATION

A. Downdraft Ventilation System:
1. Ensure that kiln stand is a minimum of eight inches high. If stand is lower than eight inches high, either shim legs to increase distance from floor to eight inches or replace stand with one that is eight inches high.
2. If kiln does not have factory drilled holes, provide number, size of holes as recommended by the manufacturer for the specific kiln model. Locate holes in accordance with manufacturer’s recommendations.

3.03 INSTALLATION

A. Install in strict accordance with manufacturer's written installation instructions and recommendations. Coordinate installation with adjacent work to ensure proper clearances.

B. Install units in final locations after finishes have been completed in each area. Verify that clearances are adequate to properly operate equipment.

C. Set units level, plumb, properly aligned, and securely in place.

D. See Division 26 sections for electrical requirements.

E. Downdraft Ventilation System:
1. Assemble and install system components on kiln in accordance with manufacturer’s written instructions.

2. Install the blower and motor assembly on the wall in a location that is close enough for the flexible aluminum duct to reach the kiln without overstretching the duct. Where wall-mounting is not possible, mount the vent motor on the floor or above the ceiling.

3.04 CLEANING AND PROTECTION

A. Test kilns, ventilation systems, and accessories to verify proper operation. Make necessary adjustments.

B. Verify that accessories required have been furnished and installed.

C. Remove packing material and leave kilns in clean condition, ready for operation.

END OF SECTION

SECTION 11 6113
ORCHESTRA SHELL

PART 1 GENERAL

1.01 RELATED DOCUMENTS

A. Drawings and general provisions of the Contract, including General and Supplementary conditions and Division 01 Specification Sections, apply to this Section.

1.02 WORK INCLUDED

A. The entire contents of this specification are included in Alternate 16A.

B. Furnish and install an orchestra shell, as shown on the drawings and specified here.

C. The full stage symphonic acoustical shell shall consist of a system of acoustical panels of appropriate construction, and adjustable to proper positions, to control and reflect a maximum range of audible frequencies.

D. The shell shall consist of two parts:
   1. Free-standing, self-supporting moveable towers for the back and side walls.
   2. Ceiling panels to be suspended and flown from stage rigging.

1.03 RELATED WORK

A. Related work includes, but is not limited to, the following:
   1. Stage rigging for the ceiling panels (Base Bid and Alternate 16B).
   2. Stage floor.

1.04 FLEXIBILITY

A. The shell shall be flexible permitting rearrangement to various size configurations. Ceiling panels shall be capable of angular adjustment for proper blending and projection of sound.

1.05 STORAGE

A. Wall towers shall be designed so that they may be nested for storage without dismantling and shall nest in the designated storage area. Ceiling panels shall be designed to hang from theatrical rigging, and can be rotated to a vertical position and stored in the fly loft.

1.06 SUBMITTALS

A. Submit drawings showing shell size, panel configuration and dimensions, as well as all details of fabrication.

B. Submit a complete list of manufactured products to be incorporated in the work shall be provided with manufacturer's identification, grade, conformance to standards and specifications, and U.L. labels, as required.

C. Submit wiring and connection diagrams for lighting.

1.07 PERFORMANCE REQUIREMENTS

A. All structural framing shall be steel or aluminum components.

B. All panels shall be composite construction with fiber honeycomb core and stressed-skin surface to provide maximum panel rigidity.

C. Tower movement shall be accomplished by means of a wheeled transport.

1.08 INSTRUCTIONS

A. At the time of installation, furnish Operation and Maintenance Manuals, which will include instructions for safe handling and deployment, warranty statement, replacement parts, regular maintenance requirements, and contact information for future service and information.

B. At the request of the owner, a sample owner's manual may be submitted for inspection and approval at the time of bid.

C. All maintenance and operation information shall be bound into an 8-1/2 inch x 11 inch booklet with cover stock front and back covers.

1.09 COMPLETION, TRAINING

A. After installation is complete, owner's on-site representative shall be contacted by installation crew lead for final inspection.

B. Installation crew lead shall provide training to persons of the owner's choice, which shall include:
   1. Review of all instructional and maintenance documentation.
   2. Complete run-through of shell deployment from storage to performance position, and back again.
   3. Adjustment of ceiling panel angles as requested.
   4. Completion of any deficient work as requested.

1.10 WARRANTY

A. The manufacturer shall warrant this equipment to be free from defects in materials and workmanship, under normal use and service, for a period of three years from date of acceptance.

B. A full corporate warranty statement shall be provided.

1.11 ESTIMATED PRODUCT LIFE CYCLE

A. The shell shall be designed for a 20-year life cycle based on average usage.

PART 2 CONSTRUCTION

2.01 ACCEPTABLE ORCHESTRA SHELL

A. The shell shall be one of the following:
   1. Bravado Acoustical Shell
      Staging Concepts
      Minneapolis, MN
      (763) 533-2094
   2. Maestro Acoustical Shell
      Wenger Corporation
      Owatonna, MN
      (507) 455-4100.
   3. Opus II Acoustical Shell
      StageRight, Clare, MI
      (800) 438-4499

2.02 ACOUSTICAL PANELS

A. Composite Construction
   1. All panels shall be of composite construction.
   2. Core shall be a minimum of 1-inch thick resin-impregnated fiber honeycomb of 80-60-15 composition (15% resin minimum).
   3. Stressed skins shall be: Painted; 1/8-inch minimum tempered hardboard face and back.
   4. Lamination shall be by means of water-activated urethane adhesive (no contact adhesive acceptable).
   5. Panels shall include integral extruded aluminum caps along the straight edges.
   6. All front surface panels shall be free of exposed fasteners.

B. Shape

1. All tower panels shall have a 60 to 72-inch radius curve.
2. Ceilings panels shall have a 60 to 72-inch radius curve.

2.03 SHELL WALL TOWERS:

A. Configuration
1. Four towers shall consist of one 4-foot center panel and two 4-foot adjustable wing panels, which create an approximate 12-foot-wide tower.
2. Six towers shall consist of one 4-foot center panel and two 3-foot adjustable wing panels, which create an approximate 10-foot-wide tower.
3. Lower wing panel may be specified as door in any locations required.
4. Door shall have a minimum opening clearance of 36-inches.
5. All instructions pertaining to the safe handling and operation of towers shall be permanently attached to the back of each tower in plain view.

Vertical framework of towers shall be steel or aluminum alloy joined at connections by formed steel components.

B. Horizontal frame shall be constructed of steel or extruded aluminum and shall join vertical frame members.

C. Base
1. Each tower shall be equipped with a counterweighted base assembly for stability.
2. Framework of base shall be steel or extruded aluminum alloy joined at connections by formed steel components.
3. Base frame components shall be connected by formed steel components.
4. Tower frame and base frame shall be connected by formed steel components.
5. Counterweight shall be profiled steel plate. Weight shall be determined by size of tower.

D. Wing-stays
1. Telescoping wing-stay shall allow the locking of tower wings in performance or storage positions.
2. Wing-stay shall position wing panels in their optimal performance position.
3. Wing-stay lock shall be operable from the floor.

E. Wing and Door Hinges
1. Wing and door panels shall be mounted to frame with split hinge featuring self-lubricating Delrin thrust and radial bearings.
2. Hinges without integral bearings that prevent metal-upon-metal friction are not acceptable.

F. Door hardware
1. Doors shall feature a slide-lock mechanism to lock door to wing for use when transporting and storing towers.
2. Doors shall incorporate inside door handles.

G. Each tower shall incorporate leveling adjustment means.

H. Towers shall be moved and positioned by means of a wheeled mover.
1. Each tower shall be equipped with swivel casters at the rear of the base and adjustable non-marking pads at the front of the base.
2. A separate wheeled transporter shall lift and transport the towers.
3. Transporter shall have tri-casters at all three corners to improve precision of positioning.
4. Transporter shall use a hand lever linked to lift brackets to raise the front of the tower off of the floor.
5. Tower systems using hydraulic means to lift tower weight are not acceptable due to the risk of damage to stage and stage equipment from leaking hydraulic fluid.

I. Storage
   1. Each tower shall be designed to nest within another to minimize storage space.
   2. Lower portion of center shell tower panel shall be removable to allow nesting of towers, as well as provide visual access for tower positioning.
   3. Removable panel shall be removable from the back side of the shell tower.
   4. Removable center panel shall store securely on the back side of the shell tower during storage and transport.
   5. All of the towers and the mover shall store in the area provided on the drawings.

J. Trim strip shall be constructed of steel or extruded aluminum required to prevent backstage light from shining between panels of shell towers.

2.04 SHELL CEILING PANELS

A. Configuration
   1. Shell ceiling panels shall hang from the stage rigging batten.
   2. Ceilings shall store in a vertical position, and shall rotate as an entire row to and from an angle specified by the user for performance.

B. Hardware
   1. Shell ceiling angle shall be variable by means of an adjustment mechanism.
   2. Ceiling angle adjustment means shall allow repeated deployment of ceilings to performance position without resetting angle.
   3. Ceiling panels shall be mounted to integral truss with split aluminum hinge featuring self-lubricating Delrin radial bearings.
   4. Ceilings without integral bearings that prevent metal-on metal friction are not acceptable.

C. Operation and Storage
   1. Ceiling shall rotate from performance to vertical storage position.
   2. Ceiling shall be balanced such that each row shall require no more than two people to deploy.

2.05 FINISHES

A. Panel face shall be plastic laminate to be determined by Architect.

B. Panel Back: Painted black

C. Trim strip: Paint color to be determined by Architect.

PART 3 EXECUTION

3.01 GENERAL

A. Fabrication shall be free of sharp edges and corners, tightly assembled and free from rattles, buzzes and resonant frequencies in the audible range. Hinges and pivots shall be aligned with no binding or excess friction.

B. Design and fabrication shall be completed such that transport and installation costs to the owner are minimized to the greatest extent possible.

3.02 INSTALLATION

A. Shall be in accordance with manufacturer's instructions.

B. Original installation shall be completed by the manufacturer.

END OF SECTION

SECTION 11 6123
DEMOUNTABLE PLATFORMS

PART 1 GENERAL

1.01 RELATED DOCUMENTS

A. Drawings and general provisions of the Contract, including General and Supplementary conditions and Division 01 Specification Sections, apply to this Section.

1.02 WORK INCLUDED

A. The work in this Section is part of the base bid and includes all labor, materials and equipment to furnish and install the following:
   1. Orchestra pit filler.

1.03 ALTERNATE

A. This work is deducted as part of Alternate 13

1.04 RELATED WORK

A. Related work includes, but is not limited to, the following:
   1. Finished stage floor.
   2. Removable seating

1.05 SUBMITTALS

A. Submittal procedures shall be as dictated by the Architect.

B. Submit shop drawings for fabrication and installation. Include plans, detail sections, and related conditions. Indicate materials, methods, finishes, attachments, and accessory items.

C. Shop drawings shall reflect field survey information.

D. Submit load data for the platform system, including safe working loads, proof loads, and any special conditions relating to the use of the platform system.

E. Upon completion of the installation, provide 1 reduced set of the shop drawings in a 3-ring binder for the Owner. In addition, provide electronic copies of the shop drawings for the Owner, the Architect and the Theatre Consultant. Electronic copies shall be in PDF format.

F. Provide 1 hard copy of an instruction and maintenance manual for the Owner. In addition, provide electronic copies of the manual for the Owner, the Architect and the Theatre Consultant. Electronic copies shall be in PDF format. The manual shall include:
   1. System description.
   2. Operation instructions, including safety measures.
   3. Maintenance instructions, including recommended procedures and schedules for inspecting system components.
   4. Catalog cuts for all purchased equipment

G. Instruction and maintenance manuals shall be provided at the time of Owner training.

1.06 WARRANTY

A. Warrant the equipment in this contract to be free of defects in materials and workmanship for a period of 2 years after acceptance of the completed installation by the Owner. Defective work shall be repaired and replaced at no cost to the Owner. The Warranty shall not cover the results of normal use, nor shall it cover damage due to neglect or improper use of the equipment.

1.07 APPLICABLE STANDARDS

A. Aluminum Association:
   1. AA Standard AA-M12C22A41.

2. AA Standard AA-M12C22A42/44.

B. American Institute of Steel Construction: AISC Manual of Steel Construction

C. American Plywood Association: US. Product Standard PS 1-83

D. American Society for Testing and Materials
1. ASTM A36: Standard Specification for Structural Steel.
2. ASTM A283: Standard Specification for Low and Intermediate Tensile Strength Carbon Steel Plates.
3. ASTM A307: Standard Specification for Carbon Steel Bolts and Studs, 60,000 psi Tensile Strength.
4. ASTM A325: Standard Specification for High-Strength Bolts for Structural Steel Joints.
5. ASTM A500: Standard Specification for Cold-Formed Welded and Seamless Carbon Steel Structural Tubing in Rounds and Shapes.
6. ASTM A501: Standard Specifications for Hot-Formed Welded and Seamless Carbon Steel Structural Tubing.
7. ASTM A570: Standard Specification for Steel, Sheet and Strip, Carbon, Hot-Rolled, Structural Quality.
8. ASTM B209: Standard Specification for Aluminum-Alloy Sheet and Plate.

E. American Welding Society (AWS):
1. AWS D1.1 Structural Welding Code-Steel.
2. AWS D1.3 Structural Welding Code-Sheet Steel, Second Edition.

F. National Fire Protection Association (NFPA): NFPA 102: Standard for Assembly Seating, Tents, and Membrane Structures.

PART 2 PART 2 - PRODUCTS

2.01 ACCEPTABLE MANUFACTURERS AND PRODUCTS

A. The following are acceptable products and manufacturers:
1. "SC90" single sided deck
"SC9600" bridge support
Staging Concepts
8400 Wyoming Avenue North, Suite 100
Minneapolis, MN 55445
(763)533-2094

2. "All Purpose Stage Deck" deck
"ME-500" stage supports
StageRight Corporation
495 Pioneer Parkway
Clare, Michigan 48617
(800) 438-4499

3. "Versalite" deck
"Strata" orchestra pit filler
Wenger Corporation
555 Park Drive
Owatonna Minnesota 55060
(507) 455-4100

2.02 TYPICAL PLATFORM DETAILS

A. Platforms shall support a minimum live load of 150 pounds per square foot.

B. Platforms shall have integral locks for attaching adjacent sections.

C. Platform edging shall be extruded aluminum with a milled finished designed to accept accessory components.

D. Support legs shall permit 2 inch fine-leveling adjustment with a non-marring screw foot.

E. Bridge supports are acceptable, if applicable to a manufacturers' system.

F. Floor surface shall be tempered board painted black to match the stage floor.

G. Guardrail sockets in the orchestra pit filler are by others. Coordinate as required.

2.03 STORAGE DOLLIES

A. Provide castered dollies capable of storing the entire pit filler system. Deck storage dollies shall accommodate 15 deck sections, secured with ratchet straps.

B. Deck storage dollies shall also include removable heavy duty push/pull bars.

PART 3 PART 3 - EXECUTION

3.01 COORDINATION

A. The Contractor is responsible for reviewing all drawings, specifications, and field conditions which affect the work in this contract. Notify the Owner whenever field measurements, analysis of the drawings and specifications, or progress of other trades indicates that the work in this contract cannot be completed as specified or as scheduled.

3.02 JOB CONDITIONS

A. The Contractor shall visit the site and verify all dimensions and existing conditions. The Contractor shall also be familiar with the work of adjoining trades and coordinate with their work.

B. The Contractor is ultimately responsible for the equipment fitting the intended spaces without interference.

3.03 PROTECTION OF EQUIPMENT

A. Protect the equipment in this Section from damage and deterioration, including rust, during all phases of the work, from the time of manufacture to installation.

3.04 CLEANING AND REPAIR

A. Repair any work or finishes that are damaged during installation by the Contractor for the work in this Section. This includes the work in this contract and the work of others. Where the work of others is damaged, reimburse the appropriate con tractor for the repair.

3.05 COMMISSIONING AND PUNCHLISTING

A. The Contractor shall work with the General Contractor or Construction Manager to arrange for a punchlisting period for the work in this Section. Punchlisting shall consist of a minimum of one 8-hour day. The building schedule shall be such that no other conflicting or obstructing activity is taking place.

B. During the punchlisting period, the orchestra pit filler shall be deployed in each of its intended positions. The Contractor shall provide labor as required for the specified punchlisting.

C. Prior to punchlisting, the Contractor shall commission the system and certify that the installation is complete and ready for punchlisting by the Theatre Consultant. If substantial portions of the installation are not complete, requiring the Consultant to make another punchlist trip, the Contractor shall compensate the Consultant for time spent and travel expenses. Compensation shall be at the Consultant's prevailing hourly and per diem rates.

3.06 TRAINING

A. Deployment of the orchestra pit filler described above for punchlisting shall also serve as the Owner training session.

END OF SECTION

SECTION 11 6133
RIGGING SYSTEMS

PART 1 GENERAL

A. Drawings and general provisions of the Contract, including General and Supplementary conditions and Division 01 Specification Sections, apply to this Section.

1.02 SUMMARY

A. This section includes work in the following spaces:
   1. Auditorium
   2. Studio Theatre

B. The base bid work of this Section includes all labor, materials, equipment and services necessary to complete the Stage Rigging and Draperies installation, as shown on the drawings and specified herein, including, but not limited to, the following:
   1. Fire curtain and motorized rigging and controls.
   2. Manual counterweight rigging for the house curtain.
   3. Arbor guides for the full potential inventory of dedicated and undedicated counterweight sets.
   4. Upper and lower lock rails and associated index strip lights.
   5. Pin rails.
   6. Manual counterweight sets for the orchestra shell reflectors.
   7. Single purchase, undedicated, manual counterweight sets. Quantity as shown on the drawings.
   8. 15,000 pounds of undedicated steel counterweights for loading of counterweight sets.
   9. Counterweights as required to balance all empty pipe weight and dedicated manual sets.
   10. Belaying pins.
   11. Rope blocks, rope, and cable cradles for stage lighting multiconductor cable pick-up.
   12. Rope blocks, rope, and related hardware for spotline rigging.
   13. Grid trap and associated hoist beam.
   14. Non-combustible borders.
   15. Mule blocks, rollers and guides as necessary to provide proper alignment and maintain allowable fleet angles.
   16. Additional support structures as required to meet the intent of the Contract Documents.
   17. Tracked, manually-drawn variable acoustics curtains.
   18. House curtain.
   19. Pipe grid

C. Alternate 16B includes all labor, materials, equipment and services necessary to complete the following:
   1. Deduct 3 manual linesets for orchestra shell rigging
   2. Add 3 motorized linesets and controls for orchestra shell rigging

D. Alternate 29 includes all labor, materials, equipment and services necessary to complete the following:
   1. Portal border and legs.
   2. Manual counterweight sets for the portal border and legs.

E. Alternate 33 includes all labor, materials, equipment and services necessary to complete the following:
   1. Black velour legs, borders and tabs.
   2. Black velour travelers.

3. Muslin cyclorama.
4. Scrim.

1.03 RELATED WORK

A. Related work which is not part of the work in this Section includes, but is not limited to, the following:
   1. Rigging support steel, gridiron, loading and fly galleries.
   2. Support steel.
   3. Finishes
   4. Power feeds and electrical work for motorized rigging, including conduit and wire between control components, and terminations.
   5. Stage lighting system, including junction boxes and multiconductor cables.
   6. Concert lighting system, including junction boxes and multiconductor cables.
   7. Variable acoustics accommodations for attachment, storage and access.
   8. Performance Sound, Video and Communications
   9. Mechanical system.
   10. Fire protection system.
   11.

1.04 DEFINITIONS

A. Furnish – supply equipment to the project for use or installation by others.

B. Install – install equipment provided to the project by others.

C. Provide – supply and install equipment.

1.05 QUALITY ASSURANCE

A. All equipment shall be manufactured and installed in accordance with the applicable standards of the following organizations:
   1. American Iron and Steel Institute (AISI).
   2. American National Standards Institute (ANSI).
   3. American Society of Mechanical Engineers (ASME).
   4. American Society for Testing and Materials (ASTM).
   5. American Welding Society (AWS).
   6. Entertainment Services and Technology Association (ESTA).
   7. Industrial Fasteners Institute (IFI).
   8. International Organization for Standardization (ISO).
   9. National Association of Chain Manufacturers (NACM).
   10. National Fire Protection Institute (NFPA).
   11. Society of Automotive Engineers (SAE).
   12. American Gear Manufacturers Association (AGMA).
   13. National Electrical Code (NEC).
   14. National Electrical Manufacturers Association (NEMA).

B. Minimum design factor for lifted loads: 8:1. Design factor shall include the effects of static loads, dynamic impact loads and reductions for end terminations and bending ratios.

C. Minimum design factor for static loads: 6:1

D. Maximum fleet angle: 1-1/2 degrees.

E. Cable bending ratio for manually operated systems shall be at least 30 times the diameter of the cable. Motorized systems shall comply with the wire rope manufacturer's minimum recommended bending ratio.

F. Wire rope clips shall be drop-forged.

G. Fasteners typically shall have a minimum SAE J429 Grade 5 or ISO R898 Class 8.8 rating. Bolts in tension shall have nuts of equivalent rating. Fasteners shall be self-locking or secured by alternate means to prevent loosening.

H. Shackles and turnbuckle jaws shall have screw pins, moused with plastic tie-wrap after installation.

I. Helically grooved drums shall accept the wire rope in a single layer, plus 3 dead wraps. Drum construction shall be all-welded Lifting lines shall enter the drum through the tubing wall at a 45 degree angle, and shall be retained by a copper Nicopress stop sleeve.

J. Overspeed brakes shall require neither electricity nor external pressure for operation. The brake shall be factory set to automatically apply itself at 125 percent of the maximum rated winch speed Locate the brake either on the low speed output shaft of the reducer, or directly to the lifting line drum.

K. Rotary limit chain sprockets shall be pinned to prevent slipping and sized for maximum usable rotation of the switch cams.

L. Limit switch chains and encoder belts located in trafficked areas shall be fully guarded.

M. Gearmotor service factors and load classifications shall conform to AGMA recommendations. The minimum service factor shall be 1.0 for continuous operation and the minimum gearing service factor shall be 1.0 with a minimum mechanical service factor of 1.3.

N. Fixed speed motors shall have high inertia fans or electronic “soft” stopping and starting characteristics as dictated by the load capacity and speed of the winch.

O. Shafting shall be keyed and designed to meet ANSI standards in order to properly transmit applied loads and torques with allowance for impact.

P. Chain transmission shall be made with roller chain selected to meet ANSI standards and safely transmit the full load, including impact, applied by the motor and the unbalanced set. The strength of the chain connectors shall be equal to the strength of the chain. Provide a means of lubricating and tightening the chains.

Q. This specification sets forth minimum safety standards, operational criteria, and minimum standards for quality in workmanship. It is the sole responsibility of the Contractor to design, engineer, furnish and install a safe, fully functional system in compliance with the design intent of the Contract Documents.

1.06 SUBMITTALS

A. Submit the following with the bid:
   1. Bill of materials, with parts identified by common industry standard numbers and/or descriptions.
   2. Specified manufacturer’s catalog cut sheets of all products called out in the bill of materials.
   3. Statement that the Manufacturer agrees to the warranty provisions.
   4. Projected timetable listing the time in weeks for each of the following activities:
      a. Shop drawing preparation
      b. Fabrication
      c. Shipping to site
      d. System commissioning
      e. As built drawing preparation

B. Shop Drawings
   1. Submit shop drawings for review. Drawing sheet size shall be uniform. Submittals of more than 5 drawings shall be bound.

2. Shop drawings relating to the fire curtain shall be stamped by a structural engineer licensed in the state of Delaware.
3. Shop drawings shall include:
   a. Title sheet listing all sheets in the submittal.
   b. Scale plans and elevations.
   c. All information necessary to explain fully the design features, appearance, function, fabrication, installation, and use of system components in all phases of operation.
   d. Country of origin for equipment
4. Fabrication shall not commence until the Theatre Consultant and the Architect determine that the shop drawings comply with the design intent of the Contract Documents.
5. Shop drawings shall be revised and resubmitted as required.

C. Manuals
1. Provide an operations and maintenance manual to the Owner at time of Owner Training. The manual shall include:
   a. Contractor contact information
   b. Manufacturer contact information
   c. System description
   d. Operation instructions, including safety measures
   e. Maintenance instructions, including recommended procedures and schedules for inspecting system components
   f. Equipment design parameters including safe working loads and duty cycles.
   g. Parts and subassembly lists
   h. Spare parts list and source information
   i. Catalog cuts for all purchased equipment
2. Provide the above on letter size and/or tabloid size paper, bound in standard 3-ring binders. Also provide documents in printable electronic format, such as PDF or other universal format files, on USB storage drives.

D. As-built Drawings
1. Within one month of system acceptance, provide complete as-built drawings. The as-built drawings shall include:
   a. Final shop drawings.
   b. Final bill of materials.
2. Provide the as-built drawings on tabloid size paper, bound in standard 3-ring binders. Also provide as-built drawings in printable electronic format, such as PDF or other universal format files, on USB storage drives.

1.07 FABRIC SAMPLES

A. Provide two 12 inch square samples of all non-black colored fabric.

1.08 WARRANTY

A. The Manufacturer shall warrant the equipment as follows:
1. Part One - According to the guarantee provisions in the General Conditions
2. Part Two - Additionally, for three years from acceptance of the systems, provide services detailed below:
   a. Provide for the Owner's operating staff a technical and operational assistance hotline and advice service at no additional cost for the duration of the warranty period. Such advice to be available during normal working hours and on evenings and weekends.
   b. Provide all required maintenance or replacement within 30 days of notification by the Owner, with the following exception: All required maintenance or replacement which affects the safe operation of the installation shall be accomplished within 48 hours.

PART 2 EQUIPMENT

2.01 ACCEPTABLE CONTRACTORS

A. The equipment shall be furnished, installed, and provided by only one of the following:
   1. J. R. Clancy, Inc./Wenger Corp.
      7041 Interstate Island Road
      Syracuse, NY 13209
      315.451.3440
   2. InterAmerica Stage
      4300 St. Johns Parkway
      Sanford, FL 32771
      407.302.0881
   3. Pook Diemont and Ohl, Inc./ Texas Scenic Company
      701 East 132nd Street
      Bronx, New York, 10454
      718.402.2677
   4. Protech
      3431 N. Bruce Street
      North Las Vegas, NV 89030
      702.639.0290

B. Additional companies wishing to bid shall submit the following 10 days before submission of bids, for review and approval by the Theatre Consultant:
   1. Firm history.
   2. A list of completed installations which are comparable in scope to the job described here.
   3. A minimum of 5 representative shop drawing sheets.
   4. If requested, a current certified financial statement showing sufficient financial base for the size of job described here.

2.02 FINISHES

A. Metal parts shall be free from rust, scale, dirt, and welding spatter. All weldments or other metal components shall receive a coat of corrosion resistant primer prior to finish coating and component assembly.

B. Finish coat shall be flat alkyd enamel. Color shall be black, except where noted otherwise in the Contract Documents.

2.03 ARBOR GUIDES

A. Arbor guides shall be steel or aluminum tee, aluminum J-bar, aluminum A-bars, or approved equal.

B. Splice joints in proper alignment, free of burrs and irregularities.

C. Support the arbor guides with wall battens spaced on not more than 5-foot vertical centers over the entire area of the guide system. Hold wall battens plumb and in place with adjustable steel wall knees. Guides shall be plumb.

D. Provide a continuous angle for securing the bottom of the arbor guides at the floor.

E. Provide continuous bottom and top stop battens of 2 inch X 2 inch hardwood. Mechanically fasten strips of 1/4" inch X 2 inch synthetic rubber to the stop battens.

F. In order to maximize arbor travel, locate the top of the tee bars and bumper so that the top of the arbor is nominally 15 inches below the shaft of the head block sheave.

G. Arbor guides shall be black, painted, powder-coated, or anodized as required by the material.

2.04 SHEAVES

A. Sheaves for manual sets shall be made from high strength nylon resin, or reinforced polymer composite.

B. Sheave grooves shall be milled or injection molded.

C. Sheave grooves shall conform to cable and rope manufacturers' standards for groove shape and tolerance.

D. Sheaves shall have precision ball bearings, except as specified otherwise below. Bearings shall be rated for the maximum static and dynamic loads at 300 feet per minute maximum RPM, plus manufacturer's recommended safety factor. Minimum lifespan rating: 2000 hours.

E. Injection molded sheave bearings and bearing bores shall be shrink fit. Bearings shall not be pressed into the bearing bore.

F. Shafts shall be made of machined steel.

G. Sheave hubs shall be sized to provide adequate load support for the bearing assembly. Hub bores shall conform to the tolerances of the bearing manufacturer.

H. Sheaves shall rotate plumb and true without touching the side plates.

2.05 HEAD BLOCKS

A. Head blocks shall be designed and fabricated to support a 3000-pound minimum manufacturer's recommended working load.

B. Head block sheaves shall be 12 inches in diameter with a groove for each wire rope lifting line and a groove for the hand line. Grooving shall be such that the centers of the wire rope and hand line have equal radii from the sheave axis.

C. Sheaves shall have 1-inch minimum diameter shafts on tapered roller bearings.

D. Side plate thickness shall be 10-gauge minimum.

E. Base angles shall be 2 x 1-1/2-inch minimum, with the horizontal legs turned in.

F. Provide mounting clips extending the full width of the base angles. Rigidly position each clip with at least two appropriately sized rated bolt assemblies. Welding is not permitted.

G. Head blocks shall be labeled with the following information:
   1. Manufacturer contact information
   2. Recommended weight limit capacity.
   3. Set number.

H. Locate the head block sheave in coordination with all related elements, including the loft blocks, loading and fly galleries, and lock rails. The onstage portion of the hand line shall be approximately 3 inches clear of the edge of the loading gallery.

2.06 LOFT BLOCKS

A. Loft blocks shall be designed and fabricated to support a 750-pound minimum manufacturer's recommended working load.

B. Loft block sheaves shall be 8 inches in diameter.

C. Sheaves shall have 5/8-inch minimum diameter shafts.

D. Side plate thickness shall be 12-gauge minimum. Provide pipe spacers to stiffen the side plates and prevent the wire rope from leaving the grooves.

E. Base angles shall be 1-1/2 x 1-1/2-inch minimum.

F. Each loft block shall have a single-line sheave, except for the near block, which shall be grooved for each of the lifting lines in the set.

G. Provide solid nylon idler sheaves on ball bearings for intermediate blocks, with a groove for each adjacent lifting line. Provide a wire rope retaining pipe spacer for the idler sheave.

H. Blocks shall be positioned so that cables pass through the grid well at its centerline.

I. Loft blocks shall be labeled with the following information:
   1. Manufacturer contact information
   2. Recommended weight limit capacity.
   3. Set number.

2.07 TENSION BLOCKS

A. Tension block sheaves shall be 10 inches diameter cast iron, grooved for a 3/4-inch diameter hand line.

B. Sheaves shall have 5/8-inch minimum diameter shafts on sealed precision ball bearings.

C. The tension block shall ride freely in the arbor guides on similar shoes as provided for the counterweight arbors. Ensure that the tension block remains in its set location when the operating line is under tension.

D. Provide each block housing with a kick plate.

E. The tension block shall be of sufficient weight to maintain tension on the operating line.

2.08 COUNTERWEIGHT ARBORS

A. Arbor tops and bottoms shall be steel and connected by two 3/4 inch diameter solid steel rods and a back framing bar. Plate stock for the back framing bar shall be a minimum of 3/8 inch thick.

B. The 3/4-inch diameter rods shall be threaded at both ends and fitted with nuts. The bottom, onstage nut shall be a forged steel eye nut for attaching a capstan winch snap hook.

C. The bottom of the arbor shall be configured so that there is a flat, stable surface on which the counterweights rest. Counterweights shall not rest on bolts, nuts or fasteners.

D. The back framing bar shall have 2 ultra high molecular weight (UHMW) polyethylene shoe assemblies for engaging the arbor guides. Each assembly shall consist of 2 shoes, a minimum of 1/4 inches thick with the width sized for working with the guide spacing. Provide steel backing plates for each shoe assembly.

E. Provide steel eyes for the top and bottom hand line attachments.

F. Provide each arbor with a 12 gauge spreader plates for every 2 feet of counterweights. Provide 2 lock collars with screw knobs. Spreader plates shall be black.

G. Label the back plate with painted INSERT SPREADER signs 2 feet on center. Adhesive signs are not acceptable.

H. Label arbor with set number.

2.09 LIFTING LINES

A. Lifting lines shall be of sufficient diameter and appropriate classification to suit the system operational requirements. Minimum standard for overhead lifting: 7X19 IWRC

B. Do not use any damaged or permanently deformed wire rope.

C. Use continuous lines from the same spool, free of knots, splices or intermediate fasteners unless specifically called for elsewhere in the Contract Documents.

2.10 ARBOR TERMINATIONS

A. Lifting line terminations at the arbor shall consist of a thimble and a copper Nicopress fitting. Attach the lines with a 5/16-inch screw pin anchor shackle, or approved substitute. Provide pipe spacers if required to keep the lines from shifting.

2.11 BATTEN TERMINATIONS

A. Lifting line terminations at the batten shall consist of a thimble, a copper Nicopress fitting, a jaw/jaw turnbuckle, and a pipe clamp. Mouse turnbuckles with plastic tie wrap. Wire mousing is not acceptable.

B. Secure the loose ends of the wire rope to the standing portion of the lines with plastic tie wrap.

2.12 HAND LINES

A. Hand lines shall be 3/4-inch diameter, 3-strand composite polyester rope, New England Ropes "Multiline II," or approved equal. Color: white

B. Attach the hand line to the arbor with 2 half hitches. Secure the rope ends to the standing portion of the line with plastic tie wrap.

2.13 COUNTERWEIGHTS

A. Counterweights shall be torch-cut, hand-smooth steel plate, with no sharp edges. Each shall be 6 inches wide and weigh nominally 21 pounds per inch of thickness.

B. Counterweights shall have a chamfered corner for ease of handling.

C. 60 percent of the weights, by quantity of individual weights, for the undedicated counterweight sets shall be 2 inches thick, 40 percent shall be 1 inch thick.

D. Paint the front and sides of the counterweights required to balance the unloaded batten white. Weights shall be painted prior to installation.

E. Locate the counterweights on the galleries as directed by the Owner, within the safe loading capacities of the galleries.

F. Upon completion of the installation, clean counterweights of surface rust.

2.14 ROPE LOCKS

A. Rope locks shall consist of a one-piece ductile iron casting, two cams and a 9 inch long handle. Provide a thumb screw with jam-nuts for pressure adjustment.

B. Rope locks and handles shall have holes for attaching a padlock.

C. Rope locks shall not “chatter” excessively when open during set operation.

D. Rope locks shall hold a minimum of 250 pounds when properly adjusted. Normal recommended counterweight set imbalance shall be 40 pounds.

E. Provide an oval keeper ring for each lock. Coat the handles and rings with matching poly-vinyl.

F. ‘Push-button’ style rope locks are acceptable.

2.15 LOCK RAILS

A. Provide a rubber pad on the lock rail to quiet the handle when it is opened.

B. Provide a white plastic “write-on/wipe-off” card for each holder with 1-inch black vinyl numbers in the upper left corner identifying the consecutive set number.

C. Design the lock rail to withstand a uniform uplift of 500 pounds per linear foot and two 2000 pound concentrated loads.

D. Provide holes in the lock rail to receive shoulder eyebolt tie off points. Provide two ½-inch shoulder eyebolt assemblies.

E. The lower lock rail shall have a continuous 3-inch square tube located 1 inch above the finished floor to serve as a kick-plate, and a means of attaching a 2000 pound capacity movable capstan winch.

F. The upper lock rail shall have a 12-inch high kickplate.

G. Fabricate the lock rail supports so that the top of the rail is 27 inches above the finished floor.

H. The lower lock rail shall be attached to the concrete subfloor. The finished stage floor shall stop at the lock rail stanchion, under the capstan tube. Adjust the height of the lock rail support structure as required.

I. Where the lock rail serves as a guardrail, extend the rail past the rope locks as required to provide continuous guardrail protection at both ends. Provide a 42-inch-high horizontal pipe on the portion of the rail that extends past the rope locks.

2.16 PIPE BATTENS

A. Battens shall be 1-1/2 inch nominal diameter standard weight (Schedule 40) black iron pipe.

B. Batten splices shall be made with an 18-inch-long, 1-9/16 inch diameter DOM tube with a minimum wall thickness of 3/16 inch. Weld one end of the splice tube. Fasten the other end with two 3/8-inch bolts. Threaded couplings are not acceptable.

C. Provide yellow plastic end caps on the batten ends.

D. Mark the centerline of the batten with a 1/2-inch-wide, painted safety yellow line.

1) Paint set numbers at both ends of the batten on the top and bottom in 1” high white stencil numbers. Adhesive numbers are not acceptable.

2.17 FIRE CURTAIN

A. The fire curtain shall conform to all applicable codes and laws, and meet the approval of the appropriate local agency. Minimum standards, subject to local approval, are described below.

B. The fire curtain shall be designed and installed to intercept hot gases, flames and smoke, and to prevent glow from a severe fire on the stage from showing on the auditorium side for a period of 20 minutes. The closing of the curtain from the full open position shall be achieved in less than 30 seconds, but the last 8 feet of travel shall require not less than 5 seconds.

C. The fire curtain and related components shall withstand a minimum pressure differential of 2 pounds per square foot.

D. Under emergency conditions the fire curtain shall close when the fireline is released, when a fusible link separates, or when the electric fireline release is activated.

E. The fire curtain shall overlap the fire-resistive proscenium opening by 18 inches on each side and 24 inches at the top.

F. Curtain fabric shall be Newtex Industries’ “Zetex Plus 1210”, or approved equal. Color: natural. Provide wire inserted fabric only if required by the local jurisdiction.

G. The fire curtain shall be labeled for compliance to applicable test methods. Labeling shall also include the curtain fabricator and the date of installation.

H. The fire curtain shall consist of a rigid steel frame covered on one side with fabric.

I. Cover the curtain frame with the minimum number of fabric widths. Sew the fabric widths together with non-combustible, non-asbestos thread. Fabric widths shall overlap by at least 1 inch at the seams.

J. Provide a non-combustible, non-asbestos yield pad at the bottom of the curtain to form a seal at the floor.

K. Provide a smoke stop along the top of the curtain.

L. Provide steel smoke pockets which extend a minimum of 3 feet above the top of the fully raised curtain. Smoke pockets shall consist of steel channels with 14-inch x 1/4 inch minimum steel plates opposite the proscenium wall.

M. Provide knife guides in the smoke pockets for smooth operation and resistance to air pressure.

N. Paint the smoke pockets, including the insides, flat black. Do not paint the fire curtain fabric.

O. Grind smooth or cover any surfaces which may catch on the house curtain.

P. The fire curtain rigging system shall include the following:
   1. 1/4-inch wire rope winch lines.
   2. Lineshaft winch with 8-inch diameter drums helically grooved for 1/4 inch wire rope..
   3. Quiet-running brakemotor with worm gear reduction. Speed: 20 feet per minute.
   4. Clutch release.
   5. Hydraulic speed governor at the winch.
   6. Rotary limit switch for high, low and overtravel trims.
   7. Lattice track counterweight.
   8. 3/8-inch diameter counterweight lines.
   9. 8-inch diameter steel counterweight loft blocks on tapered roller bearings.
   10. 12-inch diameter steel counterweight head block on tapered roller bearings.
   11. Additional mounting steel, as required.
   12. Proof coil safety stay chains at each end of the curtain and centered between the lifting lines
   13. 1/8-inch diameter wire rope release line and associated release system.
   14. Electrically activated, mechanical fire line release device that is linked to the building fire protection system, J.R. Clancy “Sure-Guard II", or approved substitute. Wiring to the fire protection system is by others. Release device must be resettable. Electro thermal links are not acceptable.
   15. A minimum of six 165-degree fusible links along the release line: 2 on each side of the proscenium and 2 along the top.
   16. Manual emergency release levers on both sides of the proscenium, each consisting of a sign which says IN CASE OF FIRE PULL LEVER TO LOWER FIRE CURTAIN. Levers shall be JR Clancy No. 016-14L, with protective enclosures, or approved substitute.
   17. Wall-mounted control station, consisting of a key switch, “dead man” style UP and DOWN pushbuttons, and a mushroom head EMER STOP pushbutton. Label the control station FIRE CURTAIN.

Q. Design the curtain system for 100 percent impact loading.

R. Resetting after emergency closing or testing shall require no more than 2 people, without the need for tools, ladders, or other equipment.

S. Modify and reinforce the gridiron deck channels as required to allow for lifting line passage, and to support counterweight loft block mounting and shock loads associated with stay chains.

T. Conduct a test of the fire curtain for both normal operation and emergency release. Any damage to the fire curtain or any part of the theatre as a result of this test shall be repaired by the Contractor at no cost to the Owner.

2.18 HOUSE CURTAIN COUNTERWEIGHT SET

A. The head block shall be a 16-inch diameter block, grooved for 1/4 inch diameter lifting lines, plus a 1-inch diameter hand line.

B. Loft blocks shall be 12-inch diameter single-line blocks. Each block except the far block shall have a 3-inch minimum diameter, nylon idler sheave on ball bearings, with a groove for each adjacent lifting line.

C. Head block and loft block sheaves shall be high strength nylon resin or reinforced polymer composite. Sheaves shall be on tapered roller bearings.

D. The arbor shall be 20 percent longer than the required length, based on the estimated weight of the curtain.

E. The hand line tension block shall be a 12-inch diameter cast iron floating floor block grooved for 1-inch hand line.

F. Lifting lines shall be 1/4-inch diameter, 7 x 19 galvanized wire rope.

G. Lifting line terminations at the batten shall consist of a thimble, a copper Nicopress sleeve, and a jaw/jaw turnbuckle, and a full pipe clamp.

H. Hand line shall be 1-inch diameter polyester rope, with a core of parallel polyester filaments, New England Ropes "Stage-Set X"," or approved equal. Color: white.

I. The pipe batten shall be a 2-inch nominal diameter standard weight (Schedule 40) pipe with an eye for engaging a guide wire at each end.

J. House curtain guide wires shall be 1/4-inch diameter wire rope. Provide turnbuckle adjustment at the gridiron on upright frames. Provide flush D-rings at the stage floor, with snap hook attachment of the guide wires to the D-rings.

K. Design the house curtain set to produce minimum noise and friction during operation.

L. House curtain track shall be H&H model 400 track, or approved equal, providing manual bi-part traveler operation as follows:
   1. Track shall be 14-gauge galvanized steel, roll-formed to 2-5/8-inch wide X 2-3/4-inch high channel with continuous slot in bottom. Provide unspliced in lengths up to 26-feet.
   2. Suspend track with two-piece steel clamp hanger. Provide 3-foot overlap at center, rigidly separated by two overlap clamps.
   3. Install end stop with cord support at each track end. Where lengths exceed 26-feet, connect tracks with 12-inch long, two-piece steel splicing clamp.
   4. Provide single carriers, spaced on 12-inch centers, constructed of two nylon-tired sealed ball bearing wheels fastened parallel to nylon carrier body. Supply with heavy-duty hook, swivel eye and 6-inch trim chain for attachment of curtain.
   5. Master carriers shall be 4-wheel nylon-tired sealed ball bearing assemblies with bodies formed from 11-gauge steel. Connect to operating line with two formed steel cord clamps attached to each body. Supply each master carrier with two heavy-duty hooks, swivel eyes and 6-inch trim chains for attachment of leading edge of curtain.
   6. Single and double end pulleys shall clamp securely to the underside of the track channel and shall be equipped with 8-inch diameter Nylatron GS sheaves grooved for 1/2-inch operating line. Install two 5/8-inch sealed precision ball bearings in each sheave. Lock shaft to side plate on head end with keeper pin to prevent rotation and install fine-threaded nylon insert lock nut.
   7. Provide floating floor block in 12-gauge steel housing containing 8" Nylatron sheave with two 3/8" sealed precision ball bearings. Suspend a 5-pound gravity point bag beneath the floor block to maintain tension on the operating line.
   8. Black operating line shall be 1/2-inch diameter, stretch-resistant rope with spun polyester outer jacket braided over polyester core.
   9. All steel components shall be zinc plated to resist corrosion.

2.19 PORTAL (ALTERNATE 29)

A. The portal shall consist of a framed black velour border and 2 tracked, framed black velour legs with associated soft legs.

B. Portal framing shall be made from aluminum tube.

C. Fabrication shall ensure that the portal border and legs will hang plumb and not bow in either direction.

D. The bottom 12 feet of the portal legs shall have a 1/4-inch plywood backing. Attach continuous 1/4-inch plywood strips to the leg frames above the hard bottom portion for uniform velour attachment.

E. Track shall be the Cargo track manufactured by Gerriets, or approved equal. Track shall have end stops at both ends.

F. Portal leg framing shall be in modular sections, as shown on the drawings, to facilitate disassembly.

G. Velour shall wrap around the framing edges. Attach velour to the portal legs with Velcro, or approved alternative system, to facilitate disassembly of the portal.

H. Velour shall be 24 ounce, 100% Trevira CS Polyester, inherently flame retardant fabric, KM Fabrics' "Charisma", or approved equal. Color: black.

I. Wood shall be flame treated in a manner approved by the appropriate local agency. A notarized affidavit shall accompany the portal attesting to approved flame treatment.

2.20 ORCHESTRA SHELL COUNTERWEIGHT SETS (BASE BID)

A. Counterweight sets for the Orchestra Shell reflectors shall be identical to the undedicated counterweight sets, with the following exceptions:
   1. Arbor shall be of sufficient length to counterbalance the shell ceiling panels plus 10 per cent.
   2. Battens shall be truss battens.
      a. Truss battens shall consist of two 1-1/2-inch nominal diameter standard weight (Schedule 40) pipes held 10 inches apart by welded steel plates.
      b. Batten splices shall be similar to the single pipe battens.

2.21 ORCHESTRA SHELL MOTORIZED SETS (ALTERNATE 16B)

A. Lineshaft winches shall include the following:
   1. Capacity: as required to support orchestra shell ceiling panels plus 10 per cent.
   2. Speed: 20 feet per minute.
   3. Lifting lines: 1 /4-inch diameter wire rope.
   4. Fleet compensated wire rope drums which are a minimum of 8-inches in diameter. Drums shall track on rollers to maintain consistent lift line drop position.
   5. Quiet running brakemotor with worm gear reduction and spring applied, electrically released brake.
   6. Additional load brake.
   7. Cross-groove detection kit.
   8. Incremental encoder for position monitoring and preset trims.
   9. Rotary limit switch for overtravel limits.
   10. Additional support steel as required.

B. Controller shall be a wall-mounted station with "dead man" style push buttons for each shell section and a LED readout that identifies the elevation of each batten above the stage.
   1. When the batten is in the fully raised position, the readout shall read "OUT".
   2. When the batten is in the fully lowered position (stowed shell 2-feet above the stage), the readout shall read "IN"

3. Otherwise the readout shall identify the height of the batten in feet and inches.

C. Battens shall be truss battens.
   a. Truss battens shall consist of two 1-1/2-inch nominal diameter standard weight (Schedule 40) pipes held 10 inches apart by welded steel plates.
   b. Batten splices shall be similar to the single pipe battens.

2.22 INDEX LIGHTS

A. Index light shall be the same length as the lock rails, with blue and white LED strips wired in two-circuits.

B. Paint the inside of the light housing white, and outside of the housing flat black.

C. Attach the index lights to brackets which are attached to the wall, corresponding to the spaces between sets where the gridiron hangers occur. Brackets shall include continuous Unistrut for work light fixture mounting. Work light fixtures are by others.

D. The stage level index light bracket shall have a continuous 1-1/2-inch nominal diameter standard weight (Schedule 40) pipe onstage of the index light, to serve as a scenery guard.

E. Hook-up to power is by others.

2.23 SIGNAGE

A. Provide a wall-mounted loading gallery sign which says the following in 3/4-inch-high, Helvetica Medium characters: MAX LIVE LOAD ON LOADING GALLERY: 750 LBS/SQ FT.

B. Provide two “Rigging Information” signs, as illustrated in the drawings. Wall mount the signs upstage, near each lock rail.

C. Protect the above signs with 1/8-inch-thick clear plastic sheets screwed to the wall.

2.24 PIN RAILS

A. Provide pin rails as per the drawings.

B. Paint the pin rails black.

C. All edges shall be ground smooth with no burrs or sharp edges.

2.25 BELAYING PINS

A. Belaying pins shall be 22-inch-long, 3/4 inch diameter solid steel rods with chamfered ends. Weld a 1 inch long, 3/4-inch stop-collar to each pin. Grind all welds smooth.

B. Paint the pins black.

C. Pins shall be ground smooth with no burrs or sharp edges.

2.26 ROPE RIGGING

A. Rope blocks shall be upright style blocks which can be mounted either to a loft block well or to the gridiron deck.

B. Sheaves shall be 8 inches in diameter and grooved for a single 5/8-inch diameter rope. Multiple line blocks shall have separate sheaves for each line.

C. Paint the rope blocks and cable cradles safety yellow.

D. Provide the following for stage lighting multiconductor cable pick-up. Install as directed by the Theatre Consultant and in coordination with the Electrical Contractor.
   1. 20 single-line blocks with angle clamps.
   2. 16 cable cradles.
   3. 2250-feet of 5/8 inch diameter, 3-strand composite polyester rope, New England Ropes "Multiline II," or approved equal. Color: black.

E. Provide the following as turnover items for the Owner:
   1. 10 single-line blocks.
   2. 5 two-line blocks.
   3. 5 four-line blocks.
   4. 4 trim clamps.
   5. 5 fifty-pound sand bags.
   6. 2 one-hundred-pound sand bags.
   7. 3600 feet of 5/8-inch diameter 3-strand composite polyester rope, New England Ropes "Multiline II," or approved equal. Color: black

F. Sand bags shall be made from heavy duty canvas with manila rope slings and heavy metal hooks with safety catches. Fill the bags with clean, dry sand.

2.27 CHAIN HOIST AND CONTROLS

A. Chain hoists shall be by Columbus McKinnon or approved equal as follows:

B. Grid trap
   1. Capacity: 2000 pounds
   2. Speed: Fixed 16 feet per minute
   3. Travel: 70’-0”
   4. Braking: Double independent DC brakes.
   5. Equip with fabric chain bag and sufficient chain to reach the floor from the installed position.
   6. Equip with manual trolley.
   7. Power connector: NEMA L16-20
   8. Control connector: NEMA L14-20
   9. Provide a hand-held pendant that includes the following:
      1) UP/DOWN select switches and associated indicators.
      2) Dead man RUN switch
      3) Emergency Stop mushroom button.

2.28 TRACKED VARIABLE ACOUSTICS CURTAINS

A. Variable acoustics curtains shall be lined, and sewn with 100 percent fullness.

B. Fabric shall be 24 ounce, 100% Trevira CS Polyester, inherently flame retardant velour, KM Fabrics’ “Charisma”, or approved equal. Color: black

C. Fabrics shall be flame treated in a manner approved by the appropriate local agency. A notarized affidavit shall accompany the draperies attesting that all fabrics have been flame treated in the approved manner.

D. No pieced horizontal or split widths of fabric shall be incorporated in any part of any curtain.

E. Fabrics of 1 color shall be from 1 dye lot.

F. Velour nap shall run in a consistent direction. Nap shall run up.

G. Reinforce the top of each piece with polyester webbing, and double stitched at the top.

H. Curtains shall attach to the track with hidden snap hooks. Hooks shall be attached with nylon strap and rivets. The top of the hooks shall be level with the top of the curtain. Hooks and attachments shall not be visible on the front side of the curtain.

I. Hem the bottom of each piece with a 6-inch-deep double turned hem with a separate canvas chain pocket approximately 3 inches above the bottom of the face fabric. Provide No. 8 zinc coated chain.

J. Sew back the face fabric of each piece 4 inches on both sides. The sides of each piece shall hang plumb within 2 inches.

K. Track shall be manufactured by the H&H Specialties, or approved equal.

L. Straight track shall be H&H Specialties Model 200 track. Curved track shall be H&H Specialties Model 300 or Model 500 track, as dictated by the track application and curtain dimensions. Color: black

M. Walk-along style track shall be provided with single nylon tired carriers on 1-foot centers and end stops.

N. Tracked cord operated drapes are one-way draw.
   1. Provide carriers on 1-foot centers. Master and single carriers shall have nylon-tired, ball bearing wheels.
   2. Provide live and dead-end pulleys, end stops, and lap clamps as required.
   3. Provide stay chains to keep the trailing edges of the curtains from leaving the pockets when the curtains are deployed.

2.29 GRID TRAP

A. Provide a hinged grid trap, as shown on the drawings. Coordinate the size and location of the required opening in the gridiron with the Steel Contractor.

B. Trap construction, including stop plates and hardware, shall be rated for a live load of 50 pounds per square foot.

C. Trap deck shall be steel grating.

D. Provide guardrail sockets, associated stanchions and removable, proof coil chain railings, as shown on the drawings.
   1. Provide trolley stops at each end of the associated hoist beam

2.30 BLACK BOX PIPE GRID

A. The pipe grid shall consist of 1-1/2-inch nominal diameter standard weight (Schedule 40) pipe connected with clamps.

B. Clamps shall be JR Clancy “Cross Grid Connectors”, or approved substitute. Provide a clamp at every pipe intersection.

C. Pipe splices shall be made with an 18-inch-long, 1-9/16-inch diameter DOM tube with a minimum wall thickness of 3/16-inch. Weld one end of the splice tube. Fasten the other end with two 3/8-inch bolts.

D. Paint the pipe grid and hanger assemblies black.

2.31 BLACK BOX ROPE RIGGING HARDWARE

A. Studio Theatre rope blocks shall be underhung style blocks.

B. Sheaves shall be grooved for a single 5/8-inch diameter rope. Multiple line blocks shall have separate sheaves for each line.

C. Provide the following blocks:
   1. 10 single-line blocks.
   2. 4 three-line blocks with separate 8-inch diameter sheaves.
   3. 4 four-line blocks, with 8-inch diameter sheaves
   4. 4 trim clamps.
   5. 10 twenty-five-pound sand bags with related hardware.
   6. 4 fifty-pound sand bags with related hardware.

D. Provide 800 feet of 5/8-inch diameter black “Multi-line II.”.

2.32 BLACK BOX PORTABLE PINRAILS

A. Pinrails shall be 4 inches in diameter and 4 feet long, with holes 6 inches on center for wooden belaying pins. Pinrails shall be made of aluminum.

B. Pinrails shall be wall-mounted to Unistrut channels. Attachment to the wall shall anticipate a live load of 250 pounds per linear foot.

C. Provide three pinrails and six belaying pins.

2.33 STAGE DRAPERY SCHEDULE

A. Base Bid stage drapery schedule is as follows:

Description	Quantity	Height	Width
House Curtain	1	27’-0”	65’-9”
Valance	1	8’-0”	56’-0”

B. Alternate 33 stage drapery schedule is as follows:

Description	Quantity	Height	Width
Borders	5	8’-0”	56’-0”
Legs	14	30’-0”	10’-0”
Bi-part Traveler	2	30’-0”	56’-0”
Cyclorama	1	30’-0”	56’-0”
Scrim	1	30’-0”	56’-0”

2.34 HOUSE CURTAIN AND VALANCE (BASE BID)

A. The width of the house curtain is the finished width. The house curtain is in 2 halves, with a 3 foot overlap in the center.

B. Face fabric – 24 ounce, 100% Trevira CS Polyester, inherently flame retardant velour, KM Fabrics’ “Charisma”, or approved equal. Color: color to be selected by the Architect from the manufacturer’s standard color range.

C. Lining - 100 percent polyester inherently flame retardant fabric, Dazian’s “Janus”, or approved equal. Color: beige.

D. The house curtain and valance shall be sewn with box pleats to 50 percent fullness.

E. Reinforce the top of the curtains with polyester webbing weighing a minimum of 2.8 ounces per yard, and double stitched at the top. Provide machine-set black anodized No. 3 grommets on 1 foot centers.

F. Provide 36-inch-long, cotton No. 4 black tie lines. The center tie line shall be white.

G. Hem the bottom of the curtains with a 6 inch deep double turned hem with a separate canvas pocket approximately 3 inches above the bottom of the face fabric. Provide No. 8 zinc coated chain.

H. Finish the onstage edges over the entire height of the curtains so that no stitches are visible on the face.

I. Face back the center edges of the house curtains with two feet of the face fabric.

J. Face back the offstage edge of the house curtain and valance 6 inches.

K. Lining of house curtain shall have same fullness as face fabric. Attach lining to face fabric with lace loops.

L. Valance shall be unlined.

M. Velour nap shall run down.

N. Label each piece at both bottom corners with the dimensions of the piece, the manufacturer, and the date of manufacture.

O. Install the house curtain on the traveler track specified elsewhere in this section.

2.35 MASKING DRAPERIES (ALTERNATE 33)

A. FABRICS
1. Legs, Borders, Travelers: 24 ounce, 100% Trevira CS Polyester, inherently flame retardant velour, KM Fabrics' "Charisma", or approved equal. Color: black.
2. Muslin Cyclorama: 100 percent cotton, .7 ounce per square foot, 32 foot wide, seamless fabric.. Color: bleached white.
3. Sharkstooth Scrim: 100 percent cotton, 35 foot wide seamless fabric. Color: Black
4. Fabrics shall be flame treated in a manner approved by the appropriate local agency, where applicable. A notarized affidavit shall accompany the draperies attesting that all fabrics have been flame treated in the approved manner.
5. No pieced horizontal or split widths of fabric shall be incorporated in any part of any drapery.
6. Fabrics of 1 color shall be from 1 dye lot.
7. Velour nap shall run in a consistent direction. Nap shall run up for black velour masking pieces.

B. DRAPERY FABRICATION
1. The width of the travelers is the finished width. The travelers are in 2 halves, with a 2 foot overlap in the center.
2. All draperies are sewn flat and are unlined, except for the traveler curtains which shall be sewn to 50% fullness.
3. Reinforce the top of each piece with polyester webbing weighing a minimum of 2.8 ounces per yard, and double stitched at the top. Provide machine-set black anodized No. 3 grommets on 1-foot centers.
4. Provide 36-inch-long, cotton No. 4 tie lines on all pipe-mounted pieces. Tie lines shall be black, except for the one at centerline, which shall be white. If a tie line is not on center, the two symmetrical about center shall be white.
5. Provide each tracked piece with oblong spring, carabiner type snaps.
6. Hem the bottoms of the legs and travelers with a 6 inch deep double turned hem with a separate canvas chain pocket approximately 3 inches above the bottom of the face fabric. Provide No. 8 zinc coated chain.
7. Hem the bottoms of the borders, cyclorama and scrim with a 6 inch deep double turned hemmed pipe pocket. Line the pocket with nylon fabric to prevent tearing. Furnish appropriate lengths of pipe for each piece. Cap both ends of each pipe.
8. Sew back the face fabric of each piece 4 inches on both sides. The sides of each drapery piece shall hang plumb within 2 inches.
9. Label each piece at both bottom corners with the dimensions of the piece, the manufacturer, and the date of manufacture.
10. Install the traveler curtains on traveler tracks specified below

2.36 TRAVELER TRACK (ALTERNATE 33)

A. Curtain track and related hardware shall be H&H Specialties Model 400 track rigged for bi-part operation. Supply track lengths with the minimum possible number of splices. Color: black.

B. Tracks shall be in two lengths with 2-feet of overlap.

C. Master and single carriers shall have nylon-tired wheels. Carriers shall have swivel eyes, trim chains, and rubber spacers. Provide carriers on 1-foot centers.

D. Provide live and dead-end pulleys, end stops, and lap clamps as required.

E. Operating lines shall be 3/8-inch stretch-resistant cord with a fiberglass center.
   1. Provide floating floor pulley. Suspend a 5-pound gravity point bag beneath the floor block to maintain tension on the operating line.
   2. Provide clamps for attaching the tracks to the pipe battens.

2.37 DRAPERY STORAGE HAMPERS (ALTERNATE 33)

A. Storage hampers shall have plywood tops and caster “donuts”.

PART 3 EXECUTION

3.01 COORDINATION

A. The Contractor is responsible for reviewing all drawings, specifications, and field conditions which affect the work in this Section. Notify the Architect whenever field measurements, analysis of the drawings and specifications, or progress of other trades indicates that the work in this Section cannot be completed as specified or as scheduled.

B. Within 6 weeks of the award of contract, and prior to the preparation of shop drawings, the Stage Rigging Contractor shall submit a written review of related work as it appears on the Contract Documents. The review shall identify errors, omissions or obstructions related to the installation and operation of the equipment in this Section. The sole intent of this written review is to identify potential problems as soon as possible. It is understood that some errors, omissions or obstructions may not be evident until the Rigging Contractor prepares shop drawings.

3.02 JOB CONDITIONS

A. The Contractor shall visit the site and verify all dimensions and existing conditions. The Contractor shall also be familiar with the work of adjoining trades and coordinate with their work.

B. The Contractor is ultimately responsible for the equipment fitting the intended spaces without interference.

3.03 INSTALLATION

A. Only trained personnel shall install the equipment in this Section.

B. Provide scaffolding and platforms as required for installation.

C. Wire ropes shall be aligned and muled so as not to touch anything except their sheave grooves and terminations.

D. Install all rigging components to maximize batten travel. High trim shall be 6 inches clear of the sprinkler pipes.

E. Turnbuckles shall be moused with plastic tie wrap after adjustment. Wire mousing is not acceptable.

F. Shackle screw pins shall be moused with plastic tie wrap. Wire mousing is not acceptable.

G. Wire rope clips shall be spaced and bolts shall be tightened to the manufacturer’s recommended torque.

H. Attach Nicopress sleeves according to the manufacturer's instructions. Check the crimps with the manufacturer's go/no-go gauge. Check the adjustment of the Nicopress tool after every 50 crimps. Maximize the number of in-shop Nicopress attachments.

I. Use lock washers with all pipe clamps.

J. Battens shall be level and shall all trim to the same high and low positions within 1 inch.

K. Batten ends shall align within 1 inch.

L. Adjust set locations in the field as required and as directed by the Theatre Consultant for final adjustment, such as maintaining clearances, and minimizing spacing where desirable.

M. Secure all loose equipment, tools and debris from falling from the gridiron and galleries during all phases of the installation.

N. At the end of each day during the installation period, remove all refuse and scrap materials to collection points specified by the Owner Upon completion of the installation, leave all areas broom clean.

O. Locate all loose system parts as directed by the Owner.

3.04 PROTECTION OF EQUIPMENT

A. Protect the equipment in this Section from damage and deterioration, including rust, during all phases of the work, from the time of manufacture to installation.

B. Notify the General Contractor or Construction Manager in writing of jobsite conditions that would adversely affect the equipment after installation. Do not install the equipment if jobsite conditions beyond the control of the Rigging Contractor will result in damage or deterioration, including rust.

C. Rust resulting from flaws in manufacturing and finishing shall be covered under the Warranty.

3.05 CLEANING AND REPAIR

A. When construction is complete, restore all system components to their delivered condition. This includes dusting, cleaning, and removal of construction materials such as fireproofing.

B. Repair any work or finishes that are damaged during installation by the Contractor for the work in this Section. This includes the work in this Section and the work of others. Where the work of others is damaged, reimburse the appropriate contractor for the repair.

3.06 OPERATION OF EQUIPMENT

A. Prior to completion of the installation and turnover to the Owner, the equipment in this section shall be operated by employees of the Contractor, those authorized by the Contractor, or those under the Contractor's supervision.

B. The Contractor shall advise the General Contractor or Construction Manager in writing of any unauthorized operation of the equipment.

3.07 DRAPERY INSTALLATION

A. Hang the house curtain. Hang all other draperies as directed by the Owner for inspection and acceptance. If the Owner requests, return the draperies to their storage bags and hampers after inspection. The Owner shall assume responsibility for soiling and damage after acceptance.

B. Do not hang the draperies if environmental conditions in the building will be detrimental to the goods. Notify the Architect and the General Contractor or Construction Manager in writing of any adverse environmental conditions.

3.08 COMMISSIONING AND PUNCHLISTING

A. The Contractor shall work with the General Contractor or Construction Manager to arrange for a punchlisting period for the work in this Section. The punchlisting period shall take place at least 1 month before the first scheduled rehearsal on stage. Punchlisting shall consist of a minimum of an 8-hour day. The building schedule shall be such that no other conflicting or obstructing activity is taking place. Punchlisting shall include the operation of every component of each system specified here, including individual counterweight sets.

B. Set labeling shall be installed prior to punchlisting.

C. Prior to punchlisting, the Rigging Contractor shall commission the system and certify that the installation is complete and ready for punchlisting by the Theatre Consultant. If substantial portions of the installation are not complete, requiring the Consultant to make another punchlist trip, the Rigging Contractor shall compensate the Consultant for time spent and travel expenses. Compensation shall be at the Consultant's prevailing hourly and per diem rates.

3.09 TRAINING

A. Assist the Owner in becoming familiar with the completed installation and personally instruct representatives of the Owner in the proper operation and maintenance of all equipment provided. Training shall be a minimum of 4 hours.

3.10 OWNER'S ACCEPTANCE

A. The Owner will accept the work in this Section upon the satisfactory completion of all punch list items.

B. Prior to final acceptance, the Owner reserves the right to use any completed portion of the work in this Section at no additional cost, unless said use poses a potential hazard to personnel or risks damage to the work in this Section or the work of others.

C. The Warranty period shall commence upon final acceptance by the Owner.

END OF SECTION

SECTION 11 6625
GYMNASIUM EQUIPMENT

PART 1 GENERAL

1.01 SECTION INCLUDES

A. Basketball backboards, goals, and support framing.

B. Wrestling mats, storage and accessories.

C. Floor anchors for tensioned elements.

D. Floor sleeves for net and goal posts.

E. Wall mounted protection pads.

F. Gym divider curtains.

G. Volleyball nets and posts.

1.02 RELATED REQUIREMENTS

A. Section 03 3000 - Cast-in-Place Concrete: Concrete floor slab to receive floor sleeves and anchors.

B. Section 05 1200 - Structural Steel Framing: Structural members supporting basketball systems.

C. Section 05 5000 - Metal Fabrications: Secondary structural members supporting gymnasium equipment.

D. Section 09 6429 - Wood Strip Flooring: Gymnasium flooring.

E. Section 26 0583 - Wiring Connections.

1.03 REFERENCE STANDARDS

A. ASTM D412 - 06 - Standard Test Methods for Vulcanized Rubber and Thermoplastic Elastomers—Tension

B. ASTM D1056 - 07 - Standard Specification for Flexible Cellular Materials—Sponge or Expanded Rubber.

C. ASTM E84 - Standard Test Method for Surface Burning Characteristics of Building Materials; 2016.

D. ASTM F-355-01 - Test Method for Shock Absorbing Properties of Playing Surface Systems and Materials.

E. ASTM F-1081-03 - Standard Specification for Competition Wrestling Mats.

F. ASTM F1292 - 09 Standard Specification for Impact Attenuation of Surfacing Materials within the Use Zone of Playground Equipment

G. AWS D1.1/D1.1M - Structural Welding Code - Steel; 2015 (Errata 2016).

H. NFPA 70 - National Electrical Code; Most Recent Edition Adopted by Authority Having Jurisdiction, Including All Applicable Amendments and Supplements.

I. NFPA 101 - Life Safety Code; 2015.

J. NFPA 286 - Standard Methods of Fire Tests for Evaluating Contribution of Wall and Ceiling Interior Finish to Room Fire Growth; 2015.

1.04 ADMINISTRATIVE REQUIREMENTS

A. Large Components: Ensure that large components can be moved into final position without damage to other construction.

B. Electrically Operated Equipment: Coordinate location and electrical characteristics of service connection.

1.05 SUBMITTALS

A. Product Data: Provide manufacturer's data showing configuration, sizes, materials, finishes, hardware, and accessories; include:
   1. Electrical characteristics and connection locations.
   2. Fire rating certifications.
   3. Structural steel welder certifications.
   4. Manufacturer's installation instructions.

B. Shop Drawings: For custom fabricated equipment indicate, in large scale detail, construction methods; method of attachment or installation; type and gage of metal, hardware, and fittings; plan front elevation; elevations and dimensions; minimum one cross section; utility requirements as to types, sizes, and locations.

C. Samples: Submit samples of wall pad coverings in manufacturer's available range of colors.

D. Operating and maintenance data, for each operating equipment item.

E. Warranty: Submit manufacturer warranty and ensure that forms have been completed in Owner's name and registered with manufacturer.

1.06 QUALITY ASSURANCE

A. Manufacturer Qualifications: Company specializing in manufacturing products specified in this section, with not less than three years of documented experience.

B. Installer Qualifications: Company specializing in performing work of the type specified with minimum three years of experience.

1.07 DELIVERY, STORAGE, AND HANDLING

A. Deliver products to project site in manufacturer's original packaging with factory original labels attached.

B. Store products indoors and elevated above floor; prevent warping, twisting, or sagging.

C. Store products in accordance with manufacturer's instructions; protect from extremes of weather, temperature, moisture, and other damage.

PART 2 PRODUCTS

2.01 MANUFACTURERS

A. Gymnasium Equipment:
   1. Draper, Inc: www.draperinc.com/sle.
   2. Performance Sports Systems: www.perfsports.com.
   3. Porter Athletic Equipment Company: www.porterathletic.com.

2.02 GENERAL REQUIREMENTS

A. See drawings for sizes and locations, unless noted otherwise.

B. Where mounting dimensions or sizes are not indicated, comply with applicable requirements of the following:
   1. National Federation of State High School Associations (NFHS) sports rules.

C. Provide mounting plates, brackets, and anchors of sufficient size and strength to securely attach equipment to building structure; comply with requirements of contract documents.

D. Hardware: Heavy duty steel hardware, as recommended by manufacturer.

E. Electrical Wiring and Components: Comply with NFPA 70; provide UL-listed equipment.

F. Structural Steel Fabrications: Welded in accordance with AWS D1.1/D1.1M, using certified welders.

2.03 DIVIDER CURTAINS

A. Gymnasium Divider Curtains:
1. Curtain Material: Class A rated, self-extinguishing vinyl coated polyester meeting NFPA 101.
   a. Upper Section: 9 oz/sq yd vinyl mesh fabric.
   b. Lower Section: 18 oz/sq yd solid vinyl coated polyester.
2. Operation: Vertical lift fold-up.
3. Controls: Wall switch.
4. Basis of Design:
   a. Draper, Inc; Fold Up, Motorized: www.draperinc.com/#sle.
   b. Porter Athletic Equipment Company; 90670000 - Roll Fold Gymnasium Divider Curtain.

2.04 BASKETBALL

A. Goals:
1. Ceiling-Suspended Backstop Assemblies: Capable of mounting both rectangular and fan-shaped backboards.
   a. Framing: Dual strut; forward folding framing.
   b. Folding Control System: Electric hoist that folds backstop with 115 volt actuator, integral limit switches that provide automatic shut-off in both positions, and safety catch with automatic reset.
   c. Framing Color: Manufacturer's standard.
   d. Basis of Design: No 90949-000 manufactured by Porter Athletic Equipment Company.
      1) Other Products:
         (a) Draper, Inc; EZ Fold Ceiling Suspended Forward-Folding: www.draperinc.com/#sle.
2. Backboards: Tempered glass, rectangular shaped.
   a. Frame: Brushed aluminum edge, steel mounting.
   b. Markings: Painted.
   c. Provide safety padding for bottom edge of backboard.
   d. Provide mounting kit.
   e. Color: Manufacturer's standard.
   f. Basis of Design: No.00208-000 manufactured by Porter Athletic Equipment Company.
3. Goals: Steel rim, mounted to backboard, with attached nylon anti-whip net; complete with mounting hardware.
   a. Net Attachment Device: Tube-tie.
   b. Finish: Powder coat orange.
   c. Basis of Design: No.00245-500 manufactured by Porter Athletic Equipment Company.
   d. Manufacturers:
      1) Porter Athletic Equipment Company.
      2) Draper, Inc.: Product No. 503581.

3) Performance Sports Systems: Product No. 2000.

2.05 VOLLEYBALL

A. Standards:
1. Powr-Trak Universal Sleeve-Type Volleyball standards, No. 01951-000 manufactured by Porter Athletic Equipment Company.
2. Volleyball System, No. PVS 500001 manufactured by Draper, Inc.
3. Performance Sports Systems: Product No. 6100.

B. Net:
1. No. 02255-000 with Boundary Marker with Antenna No. 00546-000 manufactured by Porter Athletic Equipment Company.
2. Volleyball System, No. PVS 500001 manufactured by Draper, Inc.
3. Performance Sports Systems: Product No. 6100.

C. Protective Pads:
1. No. 00717-003 manufactured by Porter Athletic Equipment Company.
2. No. 5011XX manufactured by Draper, Inc.
3. Performance Sports Systems: Product No. 6100.

D. Judge's Stand:
1. Folding Stand No. 00540-100 with protective pads No. 00547-003 manufactured by Porter Athletic Equipment Company.
2. No. 5013XX manufactured by Draper, Inc.
3. Performance Sports Systems: Product No. 6446/6040.

E. Storage Rack and Transporter:
1. No. 00956-100 manufactured by Porter Athletic Equipment Company.
2. No. 501016 manufactured by Draper, Inc.
3. Performance Sports Systems: Product No. 6295.

2.06 WRESTLING

A. Wrestling mat:
1. Fire-retardant continuous 1.25" thick rubber nitrile foam core.
2. ASTM F-1081-03: The foam core shall have received a PASS rating of less than 100 maximum Gmax when tested in accordance with Procedure A of ASTM F-355-01.
3. ASTM F-1292-09: Wrestling Mat shall be tested for impact protection. The wrestling mat shall have a Gmax reading of less than 200 and a HIC score (Head Injury Criterion) of less than 1,000 from a four foot (4') drop height.
4. ASTM D-1056: Foam core shall have a compression / deflation of 5.5 - 7.5 psi.
5. ASTM D-412: Foam core shall have a tensile (tension) strength of 75 psi or greater and an elongation property of 100 percent.
6. Provide mats with a built-in antimicrobial product, providing protection against bacteria, mold and mildew.
7. Provide custom mat sizes and configurations as shown on the Drawings.
8. Provide full-color, computer renderings of wrestling mats with graphics for review for layout, design and placement.
9. Provide two-sided wrestling and/or practice areas on both sides of the mat.
10. Foam shall be coated on all sides and edges with hot-spray polyvinyl coating.
11. Manufacturer shall be able to provide 3rd party, independent test results upon request.
12. Manufacturer shall provide a 3 year warranty from the date of shipment.
13. Wrestling Mat to be able to be reconditioned in the future.

14. Provide mat storage tubes and straps.

B. Mat Hoist: Capacity: Three (3) 15' by 45'wrestling mats (1,800-lb. maximum).
   1. Stationary Mat Hoist: "Mini" Mat Mover, No. 91105-100, manufactured by Porter Athletic Equipment Company.
   2. Triple Mat Lifter: Product: Sectional M. L. 502019 manufactured by Draper, Inc.
   3. Performance Sports Systems: Product No. 4091.

2.07 MISCELLANEOUS

A. Gym Equipment Group Control System:
   1. Product: Smart Gym Control System as manufactured by Draper, Inc.
      a. Processor assembly in surface mounted 18 x 18 x 6 inch enclosure.
      b. Relay Panels in surface mounted 8 x 15 x2 inch enclosure, quantity as required for controlling all gym equipment.
      c. Color Touchscreens in recessed 3.5 x 5.5 x 2.5 inch box, locations and quantity as shown on Drawings.
      d. Main Gym:
         1) Up/down control:
            (a) Basketball Goals, Main Court.
            (b) Basketball Goals, Side Courts
            (c) Divider Curtains
            (d) Projection screen
            (e) Wrestling Mat Hoist
         2) On/off control:
            (a) Lights
            (b) Scoreboards
            (c) Projector
      e. Auxiliary Gym:
         1) Up/down control:
            (a) Basketball Goals, Side Courts
            (b) Batting Cages
         2) On/off control:
            (a) Lights
   2. Subject to compliance with performance specified, the following manufacturer will be considered:
      a. Performance Sports Systems: Product No. TSC2000X.

B. Ceiling-Suspended Batting Cage:
   1. Product: No. 90900-000 manufactured by Porter Athletic Equipment Company.
   2. Product: BL-Practice Cage manufactured by Draper, Inc.
   3. Performance Sports Systems: Product No. 4080.

C. Divider Curtain: Roll-Fold Type:
   1. Product: No. 90670-000 manufactured by Porter Athletic Equipment Company.
   2. Product: Fold-up Divider Curtain manufactured by Draper, Inc.
   3. Performance Sports Systems: Product No. 4030.

D. Floor Cover and Transport/Storage System, Power Winder, Dust Cover, Tape Applicator:
   1. Floor Cover and Transport/Storage System: No. 02400-012 manufactured by Porter Athletic Equipment Company.
   2. Power Winder: No. 02405-000 manufactured by Porter Athletic Equipment Company.

3. Dust Cover: No. 92404-000 manufactured by Porter Athletic Equipment Company.
4. Tape Applicator-Walk Type: No. 02406-300 with case of tape No. 02406-112 manufactured by Porter Athletic Equipment Company.
5. Additional Product Manufacturers: Subject to meeting the requirements specified above the following products are approved:
    a. GymGuard floor cover and storage rack system manufactured by Cover Sports.

E. Scoreboards:
1. Type: Interior, electronic basketball scoreboard with two integral horns and LED displays for time, scores, period, number for player fouling with personal fouls, team fouls, time outs left, bonus and double bonus indicators and next possession arrows; Team Name and Intelligent Captions™ 100% electronic. Provide with Nevco Full Color, Red or Amber Message Centers.
    a. Product: Model 2750 as manufactured by Nevco.
2. Control Console: Wireless, microprocessor based, operator's control center with receiver unit mounted at scoreboard and designed to operate different models of scoreboard by interchange of keyboard overlay.
    a. Product: Model MPCW as manufactured by Nevco.
    b. Product: Model BB-2153-13 as manufactured by Daktronics.

F. Wrestling Mat Hoist:
1. Product: Sectional Mat Lifter, Model No. 502019 manufactured by Draper, Inc.
2. Product: Model No. 4091 manufactured by Performance Sports Systems, Inc.
3. Capacity: Three 15 x 45 foot sections of one standard 45 x45 foot wrestling mat with a 5 to 1 safety factor.
4. Provide a 2 hp motor, 208/230/460 volt, 3-phase with 6 lb. per ft electric safety brake.

G. Wrestling Timer:
1. Provide wall mounted timer with 4 inch display and wireless control.
2. Basis of Design: Platinum Professional Fight & Gym Timer manufactured by Title Boxing.

H. Free standing Scorer's Table
1. Product: AST-F08 by Allied Scoring Tables, Inc.
2. Length: 8 feet
3. Features:
    a. Illuminated Designer Panels
    b. 3" Padded Frame
    c. No marking wheels
4. Options:
    a. Color: To be selected from manufacturer's Standards
    b. Printed Vinyl: Graphics to be provided by Architect
    c. Possession Unit with double bonus
    d. Cup Holders
    e. Protective Cover

2.08 FLOOR-MOUNTED EQUIPMENT

A. Volley Ball Nets and Posts: One court system of adjustable posts, net, and tensioning winch meeting requirements for FIVB, USA Volleyball, NCAA and NFHS competition requirements.
1. Posts: 3-1/2 inch O.D. schedule 80 aluminum tube with 1 inch height adjustments between 42 and 96 inches.

2. Net: 4 inch square #36 nylon cord with vinyl coated polyester hem, double stitched around the perimeter.
3. Tensioning Winch: Manual crank heavy duty, self-locking worm gear mechanism.

B. Floor Anchors for Portable Gymnasium Equipment: Steel plate cast into concrete, with center screw-down button for securing tensioned elements; installed flush with finish floor surface.
1. Screw Size: 1/2 inch #13 threads.

C. Floor Sleeves for Posts: Metal sleeve, with latch cover, cast into concrete subfloor to hold poles for nets and goals; installed flush with finish floor surface.
1. Latch Cover: Brass, round; tamper resistant lock with key.
2. Sleeve: Aluminum.
3. Depth of Sleeve: 9 inches from floor surface to bottom, including latch cover.

2.09 WALL PADDING

A. Wall Padding: Foam filling bonded to backing board, wrapped in covering; each panel fabricated in one piece.
1. Surface Burning Characteristics: Flame spread index (FSI) of 25 or less, smoke developed index (SDI) of 450 or less, Class A, when tested in accordance with ASTM E84 as a complete panel.
2. Flammability: Comply with NFPA 286.
3. Covering: Vinyl-coated polyester fabric, mildew and rot resistant; stapled to back of board.
a. Color: As selected from manufacturer's standard range.
b. Texture: Embossed leather-look.
c. Fabric Weight: 14 oz/sq yd.
4. Foam: Urethane, soft, 3.5 pcf nominal density.
5. Foam: Open cell polychloroprene (Neoprene) 5.5 pcf nominal density.
6. Foam Thickness: 1-1/2 inches.
7. Backing Board: Plywood.

PART 3 EXECUTION

3.01 EXAMINATION

A. Take field measurements to ensure proper fitting of work. If taking field measurements before fabrication will delay work, allow for adjustments within recommended tolerances.

B. Inspect areas and conditions before installation. Notify Architect in writing of unsatisfactory or detrimental conditions. Do not proceed until conditions have been corrected. Commencing installation constitutes acceptance of work site conditions.

C. Verify that electrical services are correctly located and of the proper characteristics.

3.02 INSTALLATION

A. Install in accordance with contract documents and manufacturer's instructions.

B. Coordinate installation of inserts and anchors that must be built in to flooring or subflooring.

C. Install equipment rigid, straight, plumb, and level.

D. Secure all equipment with manufacturer's recommended anchoring devices.

E. Install wall padding securely, with edges tight to wall and without wrinkles in fabric covering.

F. Separate dissimilar metals to prevent electrolytic corrosion.

3.03 ADJUSTING

A. Verify proper placement of equipment.

B. Verify proper placement of equipment anchors and sleeves. Use actual movable equipment to be anchored if available.

C. Adjust operating equipment for proper operation; remove and replace equipment causing noise or vibration. Lubricate equipment if recommended by manufacturer.

3.04 CLEANING

A. Remove masking or protective covering from finished surfaces.

B. Clean equipment in accordance with manufacturer's recommendations.

3.05 PROTECTION

A. Protect installed products until Date of Substantial Completion.

B. Replace damaged products before Date of Substantial Completion.

END OF SECTION

SECTION 12 2413
WINDOW TREATMENT – ROLLER SHADES

PART 1 - GENERAL

1.01 SECTION INCLUDES

A. Manual roller shades with fascia and light filtering fabric for exterior clear glazed windows and interior vision panels and sidelights as scheduled.

1.02 REFERENCES

A. ASTM G 21 - Standard Practice for Determining Resistance of Synthetic Polymeric Materials to Fungi

B. NFPA 701 - Fire Tests for Flame-Resistant Textiles and Films.

1.03 SUBMITTALS

A. Product data: Provide manufacturer's data sheets on each product to be used, including:
   1. Preparation instructions and recommendations.
   2. Styles, material descriptions, dimensions of individual components, profiles, features, finishes and operating instructions.
   3. Storage and handling requirements and recommendations.
   4. Mounting details and installation methods.

B. Shop Drawings: Show location and extent of roller shades. Include elevations, sections, details, and dimensions not shown in Product Data. Show installation details, mountings, attachments to other Work, operational clearances, and relationship to adjoining work.

C. Samples for Initial Selection: For each colored component of each type of roller shade indicated.

D. Window Treatment Schedule: Submit Window Treatment Schedule using same room designations indicated on Drawings.

E. Maintenance Data: Include in maintenance manuals:
   1. Methods for maintaining roller shades/blinds and finishes.
   2. Precautions about cleaning materials and methods that could be detrimental to fabrics, finishes, and performance.
   3. Operating hardware.

1.04 QUALITY ASSURANCE

A. Installer Qualifications: An experienced installer who has successfully completed and serviced installations similar in scope to that indicated for this Project.

B. Source Limitations: Obtain each type of window treatment through one source from a single manufacturer.

C. Anti-Microbial Characteristics: 'No Growth' per ASTM G 21 results for fungi ATCC9642, ATCC 9644, ATCC9645.

D. Fire-Test-Response Characteristics: Provide window treatment materials with the fire-test-response characteristics indicated, as determined by testing identical products per test method indicated below by UL or another testing and inspecting agency acceptable to authorities having jurisdiction:
   1. Flame-Resistance Ratings: Passes NFPA 701.

E. Mock-Up: Provide a mock-up (manual shades only) of one roller shade assembly for evaluation of mounting, appearance and accessories.

1. Locate mock-up in window designated by Architect.
2. Do not proceed with remaining work until, mock-up is accepted by Architect.

1.05 DELIVERY, STORAGE, AND HANDLING

A. Deliver in factory packages, marked with manufacturer and product name, fire-test-response characteristics, and location of installation using same room designations indicated on Drawings and in window treatment schedule.

1.06 PROJECT CONDITIONS

A. Environmental Limitations: Do not install window treatment until construction and wet and dirty finish work in spaces, including painting, is complete and ambient temperature and humidity conditions are maintained at the levels indicated for Project when occupied for its intended use.

B. Field Measurements: Where roller shades are indicated to fit to other construction, verify dimensions of other construction by field measurements before fabrication and indicate measurements on Shop Drawings. Allow clearances for operable glazed units' operation hardware throughout the entire operating range. Notify Architect of discrepancies. Coordinate fabrication schedule with construction progress to avoid delaying the Work.

1.07 WARRANTY

A. Products: Minimum 10 years from substantial completion or manufacturer’s standard warranty.

B. Installation: One year from substantial completion.

PART 2 - PRODUCTS

2.01 MANUAL ROLLER SHADES

A. Basis of specification
   1. For base bid:
      a. Draper Shade & Screen Co., Inc.; Manual FlexShade ceiling mounted, single shadecloth, with Phifer 4400 3% open or similar.
      b. MechoShade: MechoShade/5 with EuroTwill 6000 ~3% open or similar.
   2. Color: One standard color as selected by Architect from manufacturer’s standard
   3. Rollers: Electrogalvanized or epoxy primed steel or extruded-aluminum tube of diameter and wall thickness required to support and fit internal components of operating system and the weight and width of shade band material without sagging; designed to be easily removable from support brackets; with manufacturer's standard method for attaching shade material. Provide capacity for one roller shade band per roller.
   4. Direction of Roll: Regular, from back of roller.
   5. Mounting Brackets: Standard 1018 plated steel. Sizes to be compatible with window /shade size and clutch capacity. Bracket style to be compatible with mounting requirements and site conditions.
   6. Bottom Bar: Steel or extruded aluminum. Provide concealed, by pocket of shade material, internal-type bottom bar with concealed weight bar as required for smooth, properly balanced shade operation.
   7. Fascia:
      a. Continuous removable extruded aluminum fascia that attaches to shade mounting brackets without the use of adhesives, magnetic strips, or exposed fasteners.
      b. Fascia shall be able to be installed across two or more shade bands in one piece.
      c. Fascia shall fully conceal brackets, shade roller and fabric on the tube.
      d. Provide bracket / fascia end caps where mounting conditions expose outside of roller shade brackets.

8. Shade Operation: Manual - with continuous loop bead chain, clutch, and cord tensioner and bracket lift operator.
9. Position of Clutch Operator: Right side of roller, as determined by hand of user facing shade from inside, unless otherwise indicated or dictated by field conditions.
10. Clutch: Capacity to lift size and weight of shade; sized to fit roller or provide adaptor.
11. Lift Assist Mechanism: Manufacturer's standard spring assist for balancing roller shade weight and lifting heavy roller shades.
12. Bead Chain: Nickel-plated metal or Stainless steel.
13. Cord Tensioner Mounting: As required per installation.
14. Operating Function: Stop and hold shade at any position in ascending or descending travel.

B. ROLLER SHADE FABRICATION
1. Product Description: Roller shade consisting of a roller, a means of supporting the roller, a flexible sheet or band of material carried by the roller, a means of attaching the material to the roller, a bottom bar, and an operating mechanism that lifts and lowers the shade.
2. Concealed Components: Non-corrodible or corrosion-resistant-coated materials.
   a. Lifting Mechanism: With permanently lubricated moving parts.
3. Unit Sizes: Obtain units fabricated in sizes to fill window and other openings as follows, measured at 74 deg F:
   a. Shade Units installed outside (typical) : If inside mount is required, edge of shade not exceed 1/4 inch from face of jamb.
   b. Fabricate units to completely fill existing openings from head to sill and jamb-to-jamb, unless specifically indicated otherwise.
   c. Fabricate shadecloth to hang flat without buckling or distortion.
4. Installation Brackets: Shall allow for easy removal and reinstallation of shade, operating hardware and for hardware position and shade mounting method indicated.
5. Installation Fasteners: Not fewer than two fasteners per bracket, fabricated from metal non-corrosive to shade hardware and adjoining construction; type designed for securing to supporting substrate; and supporting shades and accessories under conditions of normal use.
6. Colors of Metal and Plastic Components Exposed to View: As selected by Architect from manufacturer's full range, unless otherwise indicated.

PART 3 - EXECUTION

3.01 EXAMINATION

A. Examine substrates, areas, and conditions, with Installer present, for compliance with requirements for installation tolerances, operational clearances, and other conditions affecting performance. Proceed with installation only after unsatisfactory conditions have been corrected.

3.02 ROLLER SHADE INSTALLATION AND ADJUSTING

A. Install roller shades level, plumb, square, and true according to manufacturer's written instructions, and located so shade band is not closer than 2 inches to interior face of glass. Allow clearances for window operation hardware.

B. Adjust and balance roller shades to operate smoothly, easily, safely, and free from binding or malfunction throughout entire operational range.

3.03 CLEANING AND PROTECTION

A. Clean roller shade surfaces after installation, according to manufacturer's written instructions.

B. Remove surplus materials, rubbish, and debris resulting from installation upon completion of work, and leave areas of installation in neat, clean condition.

C. Provide final protection and maintain conditions, in a manner acceptable to manufacturer and installer, which ensure that roller shades are without damage or deterioration at time of Substantial Completion.

3.04 SCHEDULE

A. Provide roller shades at the following locations:
   1. All exterior windows, except windows serving corridors, stair towers, gymnasium, vestibules, and storage rooms.
   2. All interior vision panels, and side lites as follows:
      a. Between classrooms and corridors
      b. Between offices, conference rooms and corridors.
   3. Elsewhere as noted on drawings.

END OF SECTION

SECTION 12 3400
LAMINATE CLAD CASEWORK

PART 1 – GENERAL

1.01 SECTION INCLUDES

A. Fixed modular laminate clad casework and components.

B. Countertops and backsplashes.

1.02 RELATED SECTIONS

A. Section 06100: Blocking within walls where indicated.

B. Section 09 6500 - Resilient Flooring: Base molding.

C. Section 12 3600: Countertops

D. Division 15: Service fixtures, service waste lines, connections, and vents.

E. Division 16: Electrical service fixtures.

1.03 DEFINITIONS

A. Identification of casework components and related products by surface visibility.
   1. Open Interiors: Any open storage unit without solid door or drawer fronts, units with full glass insert doors and/or acrylic doors, and units with sliding solid doors.
   2. Closed Interiors: Any closed storage unit behind solid door or drawer fronts.
   3. Exposed Ends: Any storage unit exterior side surface that is visible after installation.
   4. Other Exposed Surfaces: Faces of doors and drawers when closed, and tops of cabinets less than 72 inches above furnished floor.
   5. Semi-Exposed Surfaces: Interior surfaces which are visible, bottoms of wall cabinets and tops of cabinets 72 inches or more above finished floor.
   6. Concealed Surfaces: Any surface not visible after installation.

1.04 QUALITY ASSURANCE

A. Manufacturer: Minimum of 5 years experience in providing manufactured casework systems for similar types of projects, produce evidence of financial stability, bonding capacity, and adequate facilities and personnel required to perform on this project.

B. Manufacturer: Provide products certified as meeting or exceeding ANSI-A 161.1-2000 testing standards.

1.05 SUBMITTALS

A. Comply with Section 01300, unless otherwise indicated.

B. Product Data: Manufacturer's catalog with specifications and construction details.

C. Shop Drawings: Indicate dimensions, description of materials and finishes, general construction, specific modifications, component connections, anchorage methods, hardware, and installation procedures, plus the following specific requirements.
   1. Include section drawings of typical and special casework, work surfaces and accessories.
   2. Indicate locations of plumbing and electrical service field connection by others.

D. Component samples: Two sets of samples for each of the following:
   1. Decorative laminate color charts.
   2. PVC edgings.

1.06 PRODUCT HANDLING

A. Deliver completed laminate clad casework, countertops, and related products only after wet operations in building are completed, store in ventilated place, protected from the weather, with relative humidity range of 25 percent to 55 percent.

B. Protect finished surfaces from soiling and damage during handling and installation with a protective covering.

1.07 JOB CONDITIONS

A. Environmental Requirements: Do not install casework until permanent HVAC systems are operating and temperature and humidity have been stabilized for at least 1 week.
   1. Manufacturer/Supplier shall advise Contractor of temperature and humidity requirements for architectural casework installation areas.
   2. After installation, control temperature and humidity to maintain relative humidity between 25 percent and 55 percent.

B. Conditions: Do not install casework until interior concrete work, masonry, plastering and other wet operations are complete.

1.08 WARRANTY

A. All materials and workmanship covered by this section will carry a five (5) year warranty from date of acceptance.

PART 2 – PRODUCTS

2.01 ACCEPTABLE MANUFACTURERS:

A. Approved Manufacturers:
   1. Basis of specification: TMI Systems Design Corporation.
   2. LSI
   3. Case Systems

B. Substitution: See Section 01600 . Other manufacturers shall comply with the minimum levels of material and detailing indicated on the drawings or as specified.

2.02 MATERIALS

A. Core Materials:
   1. Certified Particleboard: SCS Certified 100% pre-consumer recycled wood fiber particleboard with no Urea Formaldehyde added during the manufacturing process.
      a. Up to 7/8 inch thick: Industrial Grade average 47-pound density meeting ANSI A 208.1-1999, M-3 requirements.
      b. 1 inch think: Industrial Grade average 45-pound density meeting ANSI A 208.1-1999, M-2 requirements.
      c. MR Moisture Resistant Particleboard: Average 47-pound density particleboard, ANSI A208.1 1-1999, M-3.
   2. Medium Density Fiberboard 1/4 inch thick: Average 54-pound density grade, ANSI A208.2.

B. Decorative Laminates: GREENGAURD Indoor Air Quality Certified
   1. High-pressure decorative laminate VGS (.028), NEMA Test LD 3-2005.
   2. High-pressure decorative laminate HGS (.048), NEMA Test LD 3-2005.
   3. High-pressure decorative laminate HGP (.039), NEMA Test LD 3-2005.
   4. High-pressure cabinet liner CLS (.020), NEMA Test LD 3-2005.
   5. High-pressure backer BKH (.048), (.039), (.028), NEMA Test LD3-2005.

6. Thermally fused melamine laminate, NEMA Test LD 3-2005, color matched with White.

C. Laminate Color Selection: Maximum 1 color per unit face and 12 colors per project. Refer to Finish Schedule.

D. Edging Materials:
1. Cabinet Body: 1mm PVC banding, machine applied.
2. Door and counter edges: 3mm PVC banding, machine applied and machine profiled to 1/8 inch radius.

2.03 SPECIALTY ITEMS

A. Support Members:
1. Countertop support brackets: Epoxy powder coated, 11 gauge steel with integral cleat mount opening and wire management opening.
2. Undercounter support frames: Epoxy powder coated.
3. Table Legs with adjustable foot:
a. Product: E-Leg, Item No. 635.68.971 manufactured by Hafele.
b. Height: 28 inches.
c. Diameter: 2 inches.
d. Finish: Silver aluminum RAL 9006
e. Location: School Store, Room B108.

B. Miscellaneous:
1. Product: Round Grommet A2340 manufactured by TMI Systems.
2. Diameter: 3-5/8 inches

2.04 CABINET HARDWARE

A. Hinges:
1. Five knuckle, epoxy powder coated, institutional grade, 2-3/4 inch overlay type with hospital tip. 0.095 inch thick. ANSI-BHMA standard A156.9, Grade 1.
a. Doors 48 inches and over in height have 3 hinges per door.
b. Magnetic door catch with maximum 5 pound pull provided, attached with screws and slotted for adjustment.

B. Pulls:
1. Door and drawer front pulls are rectangular, semi-recessed, injection molded plastic, screw fastened. Pull design shall comply with the Americans with Disability Act (ADA).
2. Stainless Steel Wire Pulls (4 inch).

C. Drawer Slides:
1. Full extension: 150-pound load rated epoxy coated steel, bottom corner mounted with smooth and quiet nylon rollers. Positive stop both directions with self-closing feature.

D. Adjustable Shelf Supports:
1. Injection molded transparent polycarbonate shelf supports friction fit into cabinet end panels and vertical dividers, adjustable. Shelf support have minimum 2 integral support pins to interface pre-drilled holes, and to prevent accidental rotation of support. The support shall adapt to 3/4 inch or 1 inch thick shelving and provides non-tip feature for shelving. Supports may be field fixed if desired. Structural load to 1200 pounds (300 pounds per support) without failure.

E. Locks:
1. Removable core, disc tumbler, cam style lock with strike. Lock for sliding 3/4 inch thick doors is a disc type plunger lock, sliding door type with strike.

2. Elbow catch or chain bolt used to secure inactive door on all locked cabinets.

2.05 FABRICATION:

A. Fabricate casework, countertops and related products to dimensions, profiles, and details shown.
   1. Flush Overlay Construction

B. All casework panel components sized/cured to be precisely finished in size and squareness to within 0.010 inches, ensuring strict dimensional quality and structural integrity in the final fabricated product.

C. Cabinet Body Construction:
   1. Tops and bottoms shall be glued and doweled to cabinet sides and internal cabinet components such as fixed horizontals, rails and verticals.
      a. Tops, bottoms and sides of all cabinets are particleboard core.
      b. Tops, bottoms and sides of sink base units are moisture resistant particleboard core.
   2. Cabinet backs: 1/4 inch thick medium density fiberboard panel fully captured by the cabinet top, bottom and side panels. Finish to match cabinet interior. 3/4 inch x 4 inch particleboard rails will be placed behind the back panel at the top and bottom, and doweled to the sides utilizing 10mm hardwood fluted dowels. A third intermediate rail will be included on all cabinets taller than 56 inches. Utilize hot melt glue to further secure back and increase overall strength.
   3. Fixed base and tall cabinets shall have factory mounted bases of 3/4 inch thick exterior grade plywood. Base is nominal 4 inch high unless otherwise indicated on the drawings.
   4. Base units, except sink base units: Full sub-top. Sink base units are provided with open top and a stretcher at the front, attached to the sides. Back to be split removable access panel.
   5. Side panels and vertical dividers shall receive adjustable shelf hardware. Mount door hinges, drawer slides and pull-out shelves in the line boring for consistent alignment.
   6. Exposed and semi exposed edges.
      a. Edging: 1mm PVC.
   7. Adjustable shelf core: 3/4 inch thick particleboard up to 36 inches wide, 1 inch thick particleboard over 36 inches wide.
      a. Front edge: 1mm PVC.
   8. Interior finish, units with open Interiors:
      a. Top, bottom, back, sides, horizontal and vertical members, and adjustable shelving faces with VGS high-pressure decorative laminate.
   9. Interior finish, units with closed Interiors:
      a. Top, bottom, back, sides, horizontal and vertical members, and adjustable shelving faces with thermally fused melamine laminate.
   10. Exposed ends:
      a. Faced with VGS high-pressure decorative laminate.
   11. Wall unit bottom:
      a. Faced with thermally fused melamine laminate.
   12. Balanced construction of all laminated panels is mandatory. Unfinished core stock surfaces, even on concealed surfaces (excluding edges), are not permitted.

D. Drawers:
   1. Sides, back and sub front: Minimum 1/2 inch thick particleboard, laminated with thermally fused melamine doweled and glued into sides. Top edge banded with 3mm PVC.

2. Drawer bottom: Minimum 1/2 inch thick particleboard laminated with thermally fused melamine, screwed directly to the bottom edges of drawer box.
3. Paper storage drawers: Minimum 3/4 inch thick particleboard sides, back, and sub front laminated with thermally fused melamine. Minimum 1/2 inch thick particleboard drawer bottoms screwed directly to the bottom edges of the drawer box. Provide PVC angle retaining bar at the rear of the drawer.

E. Door/Drawer Fronts:
1. Core: 3/4 inch thick particleboard except at sink units which is 3/4 inch thick moisture resistant particleboard.
2. Provide double doors in opening in excess of 24 inches wide.
3. Faces:
   a. Exterior: VGS High-pressure decorative laminate.
   b. Interior: High-pressure cabinet liner CLS.
4. Door/drawer edges: 1mm PVC, external edges and outside corners machine profiled to 1/8 inch radius.

F. Miscellaneous Shelving:
1. Core material: 3/4 inch or 1 inch thick particleboard.
2. Exterior: VGS High-pressure decorative laminate.
3. Edges: 3mm PVC, external edges and outside corners machine profiled to 1/8 inch radius.

PART 3- EXECUTION

3.01 INSPECTION:

A. The casework contractor must examine the job site and the conditions under which the work under this section is to be performed, and notify the building owner in writing of unsatisfactory conditions. Do not proceed with work under this Section until satisfactory conditions have been corrected in a manner acceptable to the installer.

3.02 PREPARATION:

A. Condition casework to average prevailing humidity conditions in installation areas prior to installing.

3.03 KEYING:

A. Key alike by room, unless otherwise instructed.

B. Provide locks for each cabinet.

3.04 INSTALLATION:

A. Erect casework, plumb, level, true and straight with no distortions. Shim as required. Where laminate clad casework abuts other finished work, scribe and cut for accurate fit.

B. Adjust casework and hardware so that doors and drawers operate smoothly without warp or bind.
1. Install drawer pulls horizontally.
2. Install door pulls vertically.

C. Repair minor damage per plastic laminate manufacturer's recommendations.

D. Install countertop and backsplash.
1. Scribe and cut for accurate fit to wall and under window stools.
2. Coordinate openings with grilles supplied in Section 06200.
3. Provide 1 inch overhang at countertop over lockers.

3.05 CLEANING:

A. Remove and dispose of all packing materials and related construction debris.

B. Clean cabinets inside and out. Wipe off fingerprints, pencil marks, and surface soil etc., in preparation for final cleaning by the building owner.

3.06 COLOR SELECTION:

A. Laminate Color Selection: From Wilsonart, Formica, Nevamar and Chem Metal standard and premium colors.

B. Hinge and Pull Color Selection: From manufacturer's standard

C. Miscellaneous Hardware Color Selection (support brackets, table frames, rail): From manufacturer's standard.

D. 1mm PVC Edge Banding Color Selection: From manufacturer's standard of colors matching decorative laminate.

E. 3mm PVC Edge Banding Color Selection: Match decorative laminate color selection.

END OF SECTION

SECTION 12 3553.19
WOOD LABORATORY CASEWORK

PART 1 GENERAL

1.01 SECTION INCLUDES

A. Wood cabinets and cabinet hardware.

B. Acid storage cabinets.

C. Countertops.

D. Service fittings and outlets.

1.02 RELATED REQUIREMENTS

A. Section 07 9200 - Joint Sealants: Sealing joints between casework and countertops and adjacent walls, floors, and ceilings.

B. Section 12 3600 - Countertops, Backsplashes and Window Stools: Additional requirements for countertops.

1.03 DEFINITIONS

A. Exposed: Portions of casework visible when drawers and cabinet doors are closed, including end panels, bottoms of cases more than 42 inches above finished floor, tops of cases less than 72 inches above finished floor and all members visible in open cases or behind glass doors.

B. Semi-Exposed: Portions of casework and surfaces behind solid doors, tops of cases more than 72 inches above finished floor and bottoms of cabinets more than 30 inches but less than 42 inches above finished floor.

C. Concealed: Sleepers, web frames, dust panels and other surfaces not generally visible after installation and cabinets less than 30 inches above finished floor.

1.04 REFERENCE STANDARDS

A. HPVA HP-1 - American National Standard for Hardwood and Decorative Plywood; 2009.

B. SEFA 1.2 - Laboratory Fume Hoods; 2010.

C. SEFA 2.3 - Installation of Scientific Laboratory Furniture and Equipment; 2010.

D. SEFA 3 - Work Surfaces; 2010.

E. SEFA 7 - Laboratory and Hospital Fixtures; 2010.

F. SEFA 8W - Laboratory Grade Wood Casework; 2010.

1.05 ADMINISTRATIVE REQUIREMENTS

A. Large Components: Ensure that large components can be moved into final position without damage to other construction.

B. Service Fixtures: Coordinate location and characteristics of service connections.

1.06 SUBMITTALS

A. Product Data: Component dimensions, configurations, construction details, joint details, attachments; manufacturer's catalog literature on hardware, accessories, and service fittings, if any.

B. Shop Drawings: Casework locations, large scale plans, elevations, cross sections, rough-in and anchor placement dimensions and tolerances, clearances required, and utility locations, if any.

C. Samples For Color Selection: Wood samples, fully finished, for color and species selection.

D. Test Reports: From independent laboratory indicating compliance with referenced chemical-resistance standards for cabinet finish and liner materials.

E. Manufacturer's Installation Instructions.

F. Maintenance Data: Manufacturer's recommendations for care and cleaning.

1.07 QUALITY ASSURANCE

A. Manufacturer Qualifications: Company specializing in manufacturing the products specified in this section with minimum three years of documented experience.

B. Installer Qualifications: Company specializing in performing work of the type specified in this section, with not less than three years of documented experience.

PART 2 PRODUCTS

2.01 MANUFACTURERS

A. Wood Laboratory Casework:
   1. Kewaunee Scientific Corp: www.kewaunee.com.
   2. Subject to compliance with the specifications the products of the following manufacturers are approved:
      a. Diversified Woodcrafts, Inc.
      b. CiF Solutions.

2.02 WOOD LABORATORY CASEWORK

A. Wood Laboratory Casework: Solid wood and wood panel construction; each unit self-contained and not dependent on adjacent units or building structure for rigidity; in sizes necessary to avoid field cutting except for scribes and filler panels.
   1. Species: Plain Sliced White Maple
   2. Style: Contemporary Full Overlay.
   3. Construction: Provide joints doweled, glued and screwed, except drawers may be lock shoulder jointed; with interior of units smooth and flush; cabinet bottom flush with top of face frame; without gaps or inaccessible spaces or areas where dirt or moisture could accumulate.
   4. Structural Performance: In addition to the requirements of SEFA 3, SEFA 7, and SEFA 8W, components safely support the following minimum loads:
      a. Base Units: 500 lbs/linear ft across the cabinet ends.
      b. Suspended Units: 300 lbs static load.
      c. Tables: 300 lbs, minimum, on four legs.
      d. Drawers: 125 lbs, minimum.
      e. Hanging Wall Cases: 300 lbs (136 kg).
      f. Shelves: 100 lbs, minimum.
   5. Fixture Locations: Cut and drill counter tops, backs, and other components for service outlets and fixtures.
   6. Access Panels: Provide access panels for maintenance of utility service and mechanical and electrical components.
   7. Worktop support: Provide worktop support frames at knee spaces and instructor's tables.
      a. Model no. A80W002248-00_0; 48 inches long by Kewaunee.
   8. Scribes and Fillers: Where cabinets do not fit tight to adjacent construction, provide filler panels of matching construction and finish.
   9. Cylinider Support: Provide triple cylinder wall bracket as shown.
      a. VWR model no. 82023-836.

10. Casters: Provide 3 inch casters without brakes at mobile cabinets.
11. Finish: Factory-finish all exposed and semi-exposed surfaces with the same finish.
    a. Finish Performance: Provide finish on all surfaces having chemical resistance of Level 0 (no change) or Level 1 (slight change of gloss or slight discoloration) according to SEFA 8W and no visible effect when surface is exposed to:
        1) Hot water at temperature between 190 degrees F and 205 degrees F trickled down the test surface at 45 degree angle for 5 minutes.
        2) Constant moisture in the form of 2 by 3 by 1 inch thick cellulose sponge kept continually saturated with water and in contact with test surface for 100 hours.
    b. Preparation: Wood sanded smooth, free from dust and mill marks.
    c. Coating: Clear, superior-quality, chemical-resistant acyclic urethane; applied in accordance with manufacturer instructions, force-dried, sanded and wiped clean.
    d. Coats: Multiple coats as required to achieve minimum 1.5 mil dry film thickness.
    e. Appearance: Clear satin gloss; not cloudy or muddy.

B. Bookcases: Chemical storage open shelving units.
    1. Dimensions: 36 inches wide by 16 inches deep by 72 inches high.

C. Acid Storage Cabinets: 18 gage, double wall construction, with following exceptions:
    1. Manufacturer: Eagle Manufacturing; Product: VWR Catalog no. 56610-462.
    2. Completely lined with corrosion-resistant liner material; stainless steel fasteners for all connections and hardware inside cabinets.
    3. Shelves: Removable, same material as cabinet, covered with corrosion-resistant liner.
    4. Bottom Pan: Liquid-tight liner covering entire bottom of acid-storage cabinet.
    5. Vents: Comply with SEFA 1.2.
        a. Locate acid-storage cabinet vents in accordance with manufacturer's instructions.
        b. Vent base cabinets through work surface with manufacturer's vent kit.
        c. Vent each acid-storage cabinet separately.
        d. Seal penetrations with chemical-resistant sealant.

D. Epoxy Resin Countertops: Refer to Section 12 3600.

2.03 MATERIALS

A. Wood-Based Materials:
    1. Solid Wood: Air-dried to 4.5 percent moisture content, then tempered to 6 percent moisture content before use.
    2. Composite Wood Panels: Containing no urea-formaldehyde resin binders.

B. Exposed Solid Wood: Clear, dry, sound, plain sawn, selected for compatible grain and color, no defects.

C. Exposed Hardwood Plywood: Veneer core; HPVA HP-1 Grade AA, Type I; same species as exposed solid wood, clear, compatible grain and color, no defects. Band exposed edges with solid wood of same species as veneer.

D. Semi-Exposed Solid Wood: Dry, sound, plain sawn, no appearance defects, any species similar in color and grain to exposed portions.

E. Semi-Exposed Hardwood Plywood: Veneer core; HPVA HP-1 Grade C, Type I; plain sliced, any species similar in color and grain to exposed portions.

F. Liner Material: High-density, asbestos-free, non-combustible, calcium-silicate-based panel consisting of autoclaved Portland cement, mineral fillers and synthetic fibers.

G. Cabinet Hardware: Manufacturer's standard styles, exposed components stainless steel.

1. Finish of Exposed Components: No. 4 finish.
2. Locks: Disk tumbler locks, keyed alike in sets, masterkeyed..
   a. Provide Lund key case, 200 key capacity.
3. Shelves:
   a. Shelf Standards and Rests: Vertical chrome steel standards with rubber button fitted steel rests.
   b. Shelf Brackets: Vertical chrome steel standards with chrome steel arms.
   c. Shelf Lips: 1/2 inch solid hardwood lip at open shelves.
4. Swinging Doors:
   a. Hinges: Offset pin.
   b. Catches: Magnetic.
   c. Pulls: Chrome wire pulls, 4 inches wide.
5. Drawers:
   a. Pulls: Chrome wire pulls, 4 inches wide.
   b. Slides: Steel, full extension arms, ball bearings; capacity as recommended by manufacturer for drawer height and width.

H. Rod Assemblies: Provide standard rod assembly, 3/4 inch diameter by 36 inch wide by 36 inch long.
   1. Provide rod sockets and clamps for assemblies.

I. Service Fittings and Fixtures:
   1. Natural Gas Outlet: Model: W-0286-02 gas/air combination fitting manufactured by Kewaunee.
   2. Water Outlet: Model: W-034-00 deck mounted hot and cold mixing gooseneck faucet with W-0358-00 4" wrist blade handles manufactured by Kewaunee.

PART 3 EXECUTION

3.01 EXAMINATION

A. Verify adequacy of support framing and anchors.

B. Verify that service connections are correctly located and of proper characteristics.

3.02 INSTALLATION

A. Perform installation in accordance with manufacturer's instructions and with SEFA 2.3.

B. Use anchoring devices to suit conditions and substrate materials encountered.

C. Set casework items plumb and square, securely anchored to building structure.

D. Align cabinets to adjoining components, install filler panels where necessary to close gaps.

E. Vented Cabinets: Install in strict compliance with manufacturer's written installation instructions.
   1. Install vent kits and connect to fume hood exhaust system.
   2. Use only rigid materials for venting. No flexible materials permitted.

F. Replace units that are damaged, including those that have damaged finishes.

3.03 ADJUSTING

A. Adjust operating parts, including doors, drawers, hardware, and fixtures to function smoothly.

3.04 CLEANING

A. Clean casework surfaces thoroughly.

3.05 PROTECTION

A. Do not permit finished casework to be exposed to continued construction activity.

B. Repair damage that occurs prior to Date of Substantial Completion, including finishes, using methods prescribed by manufacturer; replace units that cannot be repaired to like-new condition.

END OF SECTION

SECTION 12 3583
SPECIALTY CASEWORK

PART 1 GENERAL

1.01 SECTION INCLUDES

A. Musical instrument storage casework.

1.02 RELATED SECTIONS

A. Section 09 6500 - Resilient Flooring.

B. Section 12 3400 - Laminate Clad Casework.

1.03 REFERENCES

A. American National Standards Institute (ANSI):
   1. ANSI A208.1 - Particleboard.

B. American Society of Civil Engineers (ASCE):
   1. ASCE 7 - Minimum Design Loads for Buildings and Other Structures.

C. ASTM International (ASTM):
   1. ASTM C 423 - Standard Test Method for Sound Absorption and Sound Absorption Coefficients by the Reverberation Room Method.
   2. ASTM C 1503 - Specification for Silvered Flat Glass Mirror.
   3. ASTM E 488 - Standard Test Methods for Strength of Anchors in Concrete and Masonry Elements.
   4. ASTM E 795 - Standard Practices for Mounting Test Specimens During Sound Absorption Tests.

D. Audio Engineering Society (AES):
   1. AES-4id - AES information document for room acoustics and sound reinforcement systems -- Characterization and measurement of surface scattering uniformity.

E. Builders Hardware Manufacturers Association (BHMA):
   1. ANSI/BHMA A156.9 - Cabinet Hardware.

F. GREENGUARD Environmental Institute (GEI):
   1. GREENGUARD certified low emitting products.

G. International Electrotechnical Commission (IEC)
   1. Requirements for listing and labeling of products.

H. National Electrical Manufacturers Association (NEMA):
   1. NEMA LD 3 - High Pressure Decorative Laminates.

I. National Fire Protection Association (NFPA):
   1. NFPA 70 - National Electrical Code (NEC).

J. Underwriters' Laboratories, Inc. (UL) and Underwriters' Laboratories of Canada (ULC):
   1. Requirements for listing and labeling of products.

K. U.S. Department of Commerce, National Institute of Standards and Technology (NIST):
   1. DOC PS 1 - U.S. Product Standard for Construction and Industrial Plywood.

1.04 SUBMITTALS

A. Product Data: Manufacturer's data sheets, installation instructions, and maintenance recommendations.

B. Shop Drawings: Prepared by manufacturer. Include elevations showing casework components, details of each condition of installation, and types and locations of hardware and fasteners. Show fabrication and installation details. Include plans, elevations, sections, details, and attachments to other Work.
   1. Indicate seismic bracing and fastening requirements.

C. Samples: For each color and finish for each exposed casework component.

D. Operation and Maintenance Data.

E. Warranty: Submit sample meeting warranty requirements of this Section.

1.05 QUALITY ASSURANCE

A. Manufacturer Qualifications: Approved manufacturer listed in this section, with minimum 5 years experience in manufacture of similar products in use in similar environments.

B. Obtain music education casework through one source from a single approved manufacturer.

C. Electrical Components: Listed and labeled per NFPA 70, Article 100, by a testing agency acceptable to authorities having jurisdiction.

1.06 DELIVERY, STORAGE, AND HANDLING

A. Deliver, store, and handle casework in accordance with manufacturer's recommendations. Ship to jobsite only after roughing-in, painting work, and other related finish work has been completed and installation areas are ready to accept casework and recommended temperature and humidity levels will be maintained during the remainder of construction.

1.07 COORDINATION

A. Coordinate installation of blocking and supports in frame wall assemblies under work of other sections where required for anchoring casework.

1.08 WARRANTY

A. Special Warranty: Manufacturer's written warranty indicating manufacturer's intent to repair or replace components of music education storage casework that fail in materials or workmanship within 10 years from date of Substantial Completion. Failures are defined to include, but are not limited to, the following:
   1. Fracturing or breaking of casework components including doors, panels, shelves, or hardware resulting from normal wear and tear and normal use other than vandalism.
   2. Delamination or other failures of glue bond of components.
   3. Warping of casework components not resulting from leaks, flooding, or other uncontrolled moisture or humidity.
   4. Failure of operating hardware.

PART 2 PRODUCTS

2.01 MANUFACTURERS

A. Acceptable Manufacturer: Wenger Corporation.

B. Requests for substitutions will be considered in accordance with provisions of Division 1 - Product Requirements.

2.02 MATERIALS

A. Materials Meeting Sustainable Design Requirements:
   1. No Added Urea Formaldehyde Products: Provide music education storage casework made with composite products and adhesives with no urea formaldehyde added.

2. FSC Certified Wood Products: Provide music education storage casework made with wood from certified sources. Also available in Moisture Resistant, Class 1 Fire rated and Plywood cores.

B. Particleboard: ANSI A208.1, minimum 43 lb/cu. ft. (689 kg/cu. m) density, composite products and adhesives, with no urea formaldehyde added.

C. Fire Rated Particle Board: ANSI A208.1, minimum 45 lb/cu. ft. (720 kg/cu. m) density ASTM E-84 class 1.

D. Plywood: APA standards PS1-98 section 5.7.4 or 5.7.1 or ANSI /HPVA HP-1-2004 Panel provide with HDF skins to prevent grain telegraphing.

E. Particleboard Thermoset Panels: Particleboard finished with thermally-fused polyester surfacing on both sides meeting performance properties of NEMA LD 3 for VGS grade, edge-banded, including the following:
   1. Surface Abrasion Resistance: Taber Wheel, 400 cycles, for solid colors.

F. Polyethylene Shelves: High-density, one-piece, blow-molded or polyethylene, with radiused front edge, for abuse-resistant shelves. Same color throughout will not show scratches.

G. PVC Edge Banding: Radiused PVC extrusions, 1/8 inch (3 mm) thick.

2.03 MUSICAL INSTRUMENT STORAGE CASEWORK

A. Basis of Design: UltraStor Storage Cabinets as manufactured by Wenger Corporation. Modular instrument storage casework with integral bases, adjustable levelers, and through-bolted fastening, enabling owner reconfiguration of unit layout.

B. General: Provide through-ventilating instrument storage casework meeting requirements in System Description and Performance Requirements Articles.

C. Side Panels and Divider Panels: Particleboard thermoset panel with no urea formaldehyde added, 3/4 inch (19 mm) thick. Side panels machined to accept unit-to-unit through-bolting.

D. Panel Doors: Particleboard thermoset panel with no urea formaldehyde added, 3/4 inch (19 mm) thick.
   1. Color: As scheduled.

E. Panel Edge Banding: 3 mm thick, heat-bonded, with radiused and profiled edges and corners.

F. Shelving: Sized with adequate gap between shelving and casework side panels to allow air movement inside casework.
   1. Up to 27 inches (686 mm) wide: Removable molded polyethylene shelf, with impact-resistant, radiused front edge, mounted to cabinet wall with self-locking clip.
   2. Over 27 inches (686 mm) wide: For large instrument casework: Removable formed polyethylene shelf, ribbed, with high-impact-resistant, radiused front edge, supported by steel tube frame.
   3. Tubular steel supports are included for shelves over 19 inches (483 mm) wide.

G. Casework Panel Color: As selected by Architect from manufacturer's standard colors.

H. Butt Hinges: 2-3/4 inches (70 mm), 5-knuckle steel hinges made from 0.090 inch (2.29 mm) thick metal, ANSI/BHMA A156.9, Grade 1, with powder-coated finish, through-bolted to door and side panels and welded to grille door frames. Provide 2 hinges on compartment doors, and 4 hinges on full-height doors.

I. Slide Latch: 0.105 inch (2.67 mm) min. thickness steel, with padlock eye, powder-coat finish, through-bolted to panel door and side panel and welded to grille door frames. Latches securely

without padlock. Provide with clear plastic label holder for use with standard size labels; number system available for user to print. Padlocks furnished by Owner.

J. Panel Connectors: 1/4-20 by 1.77 inch (45 mm) panel connectors, with steel thread inserts, powder coated to match panels.

K. Cabinet Levelers: Leveling glides with 3/8 inch (9.5 mm) diameter threaded steel rod in steel corner brackets, minimum two each per cabinet side, accessible from within unit, and concealed in completed installation.

L. Carcass joinery includes lag screws powder coated to match substrate.

M. Back panel 7/32 inch (5.6 mm) reinforced with 3/4 inch (19 mm) stretchers panels held in a dado groove and lag screwed in place.

N. Fasteners: Manufacturer-recommended fasteners as required for casework substrate and project performance requirements, consisting of one or more of the following:
   1. Sheet Metal Screws: SAE J78, corrosion-resistant-coated, self-drilling, self-tapping steel drill screws.
   2. Wood Screws: ASME B18.6.1.
   3. Expansion Anchors in Concrete and Concrete Masonry Units: Carbon-steel, zinc plated.
   4. Hardware supplied to anchor the cabinets to the wall and to adjacent casework

O. Finish: Steel Sheet, Steel Wire, and Exposed Fasteners. Urethane-based electrostatic powder coating, color as indicated. Refer to Drawings.

PART 3 EXECUTION

3.01 EXAMINATION

A. Examine casework installation areas for compliance with requirements for installation tolerances, location of blocking and other anchoring reinforcements, and other existing conditions affecting installation and performance of casework. Proceed with casework installation upon correction of unsatisfactory conditions.

3.02 CASEWORK INSTALLATION

A. Install plumb, level, and true; using integral levelers. Install in accordance with manufacturer's recommendations and approved submittals.

B. Install hardware uniformly and precisely. Set hinges snug and flat. Adjust and align hardware so moving parts operate freely and contact points meet accurately. Allow for final adjustment after installation.

C. Adjust casework and hardware so doors and drawers operate smoothly without warp or bind and close with uniform reveals.

3.03 CLEANING AND PROTECTING

A. Repair or replace defective work as directed by Architect upon inspection.

B. Clean casework surfaces. Touch up, refinish, or replace damaged components in a manner acceptable to Architect.

C. Turn over operation and maintenance instructions to Owner.

END OF SECTION

SECTION 12 3600
COUNTERTOPS, BACKSPLASHES AND WINDOW STOOLS

PART 1 GENERAL

1.01 SECTION INCLUDES

A. Countertops for manufactured casework.

B. Wall-hung counters and vanity tops.

C. Sinks molded into countertops.

D. Epoxy resin sinks.

E. Solid surface window stools.

F. Solid surface thresholds.

1.02 RELATED REQUIREMENTS

A. Section 11 5300 - Laboratory Equipment: Work surfaces inside fume hoods.

1.03 REFERENCE STANDARDS

A. ANSI A208.1 - American National Standard for Particleboard; 2009.

B. ASTM D635 - Standard Test Method for Rate of Burning and/or Extent and Time of Burning of Plastics in a Horizontal Position; 2014.

C. AWI/AWMAC/WI (AWS) - Architectural Woodwork Standards; 2014.

D. AWMAC/WI (NAAWS) - North American Architectural Woodwork Standards, U.S. Version 3.0; 2016.

E. IAPMO Z124 - Plastic Plumbing Fixtures; 2012.

F. ISFA 2-01 - Classification and Standards for Solid Surfacing Material; 2013.

G. NEMA LD 3 - High-Pressure Decorative Laminates; 2005.

H. PS 1 - Structural Plywood; 2009.

1.04 SUBMITTALS

A. Product Data: Manufacturer's data sheets on each product to be used, including:
   1. Preparation instructions and recommendations.
   2. Storage and handling requirements and recommendations.
   3. Specimen warranty.

B. Shop Drawings: Complete details of materials and installation; combine with shop drawings of cabinets and casework specified in other sections.

C. Selection Samples: For each finish product specified, color chips representing manufacturer's full range of available colors and patterns.

D. Verification Samples: For each finish product specified, minimum size 6 inches square, representing actual product, color, and patterns.

E. Test Reports: Chemical resistance testing, showing compliance with specified requirements.

F. Installation Instructions: Manufacturer's installation instructions and recommendations.

G. Maintenance Data: Manufacturer's instructions and recommendations for maintenance and repair of countertop surfaces.

1.05 QUALITY ASSURANCE

1.06 DELIVERY, STORAGE, AND HANDLING

A. Store products in manufacturer's unopened packaging until ready for installation.

B. Store and dispose of solvent-based materials, and materials used with solvent-based materials, in accordance with requirements of local authorities having jurisdiction.

1.07 FIELD CONDITIONS

A. Maintain environmental conditions (temperature, humidity, and ventilation) within limits recommended by manufacturer for optimum results. Do not install products under environmental conditions outside manufacturer's absolute limits.

PART 2 PRODUCTS

2.01 COUNTERTOPS

A. Quality Standard: Custom Grade, in accordance with AWI/AWMAC/WI (AWS) or AWMAC/WI (NAAWS), unless noted otherwise.

B. Plastic Laminate Countertops: High-pressure decorative laminate (HPDL) sheet bonded to substrate.
   1. Laminate Sheet: NEMA LD 3, Grade HGS, 0.048 inch nominal thickness.
      a. Finish: Matte or suede, gloss rating of 5 to 20.
      b. Surface Color and Pattern: As indicated on drawings.
   2. Exposed Edge Treatment: Square, substrate built up to minimum 1-1/4 inch thick; covered with matching laminate.
   3. Back and End Splashes: Same material, same construction.
   4. Wall Protection above Backsplash: Same sheet material without substrate, adhered directly to wall surface as shown.

C. Epoxy Resin Countertops: Filled epoxy resin molded into homogenous, non-porous sheets; no surface coating and color and pattern consistent throughout thickness; with integral or adhesively seamed components.
   1. Flat Surface Thickness: 1 inch, nominal.
   2. Chemical-Resistance: Provide products that resist the following chemicals with not more than Moderate Effect when tested in accordance with NEMA LD 3:
   3. Flammability: Self-extinguishing, when tested in accordance with ASTM D635.
   4. Surface Finish: Smooth, non-glare.
   5. Color: Black.
   6. Exposed Edge Shape: 3/16 inch radius corner.
   7. Drip Edge: Drip groove 1/8 inch wide and deep, located 1/2 inch back from edge on underside of all exposed edges.
   8. Back and End Splashes: Same material, same thickness; separate for field attachment.
   9. Sinks: Same material, same color; integrally molded with counter; bottom sloped to outlet; molded outlets; drain outlet located in back corner.
      a. Sides and Ends: 1/2 inch minimum thickness.
      b. Bottoms: 5/8 inch minimum thickness.
      c. Interior Corners: 1 inch minimum radius.
      d. Clamping collars for 1-1/2 or 2 inch diameter waste pipe, for sealed but not permanent connection.
      e. Steel channel supports front to back on each side, fastened to underside of top to support twice full sink weight.

D. Solid Surfacing Countertops, Window Stools and Thresholds: Solid surfacing sheet or plastic resin casting over continuous substrate.
   1. Flat Sheet Thickness: 1/2 inch, minimum.
   2. Solid Surfacing Sheet and Plastic Resin Castings: Complying with ISFA 2-01 and NEMA LD 3; acrylic or polyester resin, mineral filler, and pigments; homogenous, non-porous and capable of being worked and repaired using standard woodworking tools; no surface coating; color and pattern consistent throughout thickness.
      a. Manufacturers:
         1) Avonite Surfaces: www.avonitesurfaces.com.
         2) Dupont: www.corian.com.
         3) Formica Corporation: www.formica.com.
      b. Sinks and Bowls: Integral castings; minimum 3/4 inch wall thickness; comply with IAPMO Z124.
      c. Finish on Exposed Surfaces: Matte, gloss rating of 5 to 20.
      d. Color and Pattern: As indicated on drawings.
   3. Other Components Thickness: 1/2 inch, minimum.
   4. Exposed Edge Treatment: Built up to minimum 1-1/4 inch thick; square edge; use marine edge at sinks.
   5. Back and End Splashes: Same sheet material, square top; minimum 4 inches high.
   6. Wall Protection above Backsplash: Same sheet material without substrate, adhered directly to wall surface as shown.
      a. Thickness: 1/4 inch.
   7. Thresholds: As indicated on drawings.

2.02 MATERIALS

A. Wood-Based Components:
   1. Wood fabricated from old growth timber is not permitted.
   2. Provide sustainably harvested wood, certified or labeled as specified in Section 01 6000 - Product Requirements.

B. Plywood for Supporting Substrate: PS 1 Exterior Grade, A-C veneer grade, minimum 5-ply; minimum 3/4 inch thick; join lengths using metal splines.

C. Particleboard for Supporting Substrate: ANSI A208.1 Grade 2-M-2, 45 pcf minimum density; minimum 3/4 inch thick; join lengths using metal splines.

D. Adhesives: Chemical resistant waterproof adhesive as recommended by manufacturer of materials being joined.

E. Joint Sealant: Mildew-resistant silicone sealant, clear.

2.03 FABRICATION

A. Fabricate tops and splashes in the largest sections practicable, with top surface of joints flush.
   1. Join lengths of tops using best method recommended by manufacturer.
   2. Fabricate to overhang fronts and ends of cabinets 1 inch except where top butts against cabinet or wall.
   3. Prepare all cutouts accurately to size; replace tops having improperly dimensioned or unnecessary cutouts or fixture holes.

B. Provide back/end splash wherever counter edge abuts vertical surface unless otherwise indicated.
   1. Secure to countertop with concealed fasteners and with contact surfaces set in waterproof glue.

2. Height: 4 inches, unless otherwise indicated.

C. Solid Surfacing: Fabricate tops up to 144 inches long in one piece; join pieces with adhesive sealant in accordance with manufacturer's recommendations and instructions.

D. Wall-Mounted Counters: Provide skirts, aprons, brackets, and braces as indicated on drawings, finished to match.

PART 3 EXECUTION

3.01 INSTALLATION

A. Securely attach countertops to cabinets using concealed fasteners. Make flat surfaces level; shim where required.

B. Attach plastic laminate countertops using screws with minimum penetration into substrate board of 5/8 inch.

C. Attach epoxy resin countertops using compatible adhesive.

D. Seal joint between back/end splashes and vertical surfaces.

3.02 CLEANING

A. Clean countertops surfaces thoroughly.

3.03 PROTECTION

A. Protect installed products until completion of project.

B. Touch-up, repair or replace damaged products before Date of Substantial Completion.

END OF SECTION

SECTION 12 6113
FIXED AUDIENCE SEATING

PART 1 GENERAL

1.01 RELATED DOCUMENTS

A. Drawings and general provisions of the Contract, including General and Supplementary conditions and Division 01 Specification Sections, apply to this Section.

1.02 DEFINITIONS

A. Furnish – supply equipment to the project for use or installation by others.

B. Install – install equipment provided to the project by others.

C. Provide – supply and install equipment.

1.03 WORK INCLUDED

A. Provide fixed theatre seating and related items, as indicated on the drawings, specified here, and as required to complete the installation.

1.04 RELATED WORK

A. Related work which is not part of the Fixed Seating Contract includes, but is not limited to, the following:
   1. Auditorium floors.
   2. Demountable platforms.
   3. Orchestra pit lifts.
   4. Handrails and guardrails.
   5. Electrical services and connections.
   6. Electrical connection to aisle lights.
   7. HVAC System

1.05 ACCEPTABLE CONTRACTORS

A. The following are acceptable Contractors:
   1. Irwin Seating Company
      PO Box 2429
      3251 Fruit Ridge Road NW
      Grand Rapids MI 49504
      (616) 784-2881
   2. Ducharme Seating
      9275 Le Royer
      St. Leonard
      Quebec H1P3H7
      (514)-328-1444
   3. Series Seating
      20900 NE 30th Ave, Ste 901
      Miami, FL 33180
      (800) – 706-3598

1.06 QUALITY ASSURANCE

A. Product reference: See section 2.1 below and refer to the Design Intent drawings for design details. (if applicable)

B. The installation shall comply with the applicable requirements of the laws, codes, ordinances and regulation of the Federal, State and Municipal authorities having jurisdiction.

C. Seating manufacturer shall verify that minimum clearances shall meet ADAAG (ADA Accessibility Guidelines for Buildings and Facilities) regulations and local code.

1.07 SUBMITTALS

A. If product coordination shop drawings or seating layout review is required more than three times because of seating manufacturer's failure to incorporate earlier comments, all subsequent reviews will be billed on a time and materials basis to the seating manufacturer.

B. Shop drawings shall be of uniform size, bound and include the following:
   1. Title sheet listing all sheets in the submittal.
   2. Scale plans and elevations.
   3. All information necessary to explain fully the design features, appearance, function, fabrication, installation, and use of components in all phases of operation.
   4. Country or origin for equipment not manufactured in the United States.

C. Product coordination shop drawings shall include the following:
   1. Complete plans for all levels indicating dimensions to aisle light stub-ups.
   2. Details showing methods of seat installation and anchorage, relationship to adjacent work and complete setting diagrams.
   3. Detail sections and elevations for each different seat condition, showing back pitch, viewer eye location, and clear distance from adjacent seat or guardrail with the seat both up and down, and (where applicable) the relationship to the adjacent riser or wall.
   4. Hinged end standard details.
   5. Removable seat details, including means of attachment to demountable platforms, if applicable.
   6. Details of aisle lighting connections, including connections for seats on platforms and removable seats.

D. Submit product development sample following approval of product coordination shop drawings. Fabrication shall not commence until the Theatre Consultant, the Architect, and the Owner determine that the product coordination shop drawing and sample are in compliance with the design intent of the Contract Documents.

E. Following approval of the product coordination shop drawings and once accurate as-built field measurements of the seating areas can be obtained, submit the seating layout for approval. The seating layout shall include the following:
   1. Complete seating plans for all levels, showing all seats, seat sizes, locations of base structures, aisle widths, end standards, transfer arms, and aisle lights.
   2. Field measurements and survey information. Seating layout will not be approved unless all dimensions have been field verified.

F. Submit complete manufacturer's product data for all work in this Section, consisting of complete product description and specifications, catalog cuts, laboratory test results, installation instructions, maintenance instructions, and other data required for product approval and use.

G. With Bid, submit the following detail samples for approval:
   1. 8-inch square minimum piece of wood in the species and finish specified, for both solid and laminated applications.
   2. 3-inch square minimum piece of metal in the finish specified.
   3. 12-inch square minimum piece of each fabric type of the material specified.
   4. Seat number and row letter plate.

H. The product development sample shall be complete in every respect, including upholstery and finishes. The architect reserves the right to request replacement samples or portions of the samples until the appropriate party's approval has been obtained. The samples may not be incorporated in the final installation. Samples shall remain the property of the Owner/Operator.

I. Submit written approval of the proposed seating as required from all building, safety, and fire officials and agencies having jurisdiction over the work. Copies of all such approvals shall be delivered to the appropriate party and the Owner prior to installation.

J. Provide an instruction and maintenance manual in a 3-ring binder for the Owner at time of installation. In addition, provide electronic copies on thumb drives for the Owner, Architect and Theatre Consultant. Electronic copies shall be in PDF format. The manual shall include:
   1. Manufacturer and installer contact information.
   2. Spare parts list and source information, including upholstery fabric.
   3. Recommended procedures for cleaning, touch-up and maintenance of all finished surfaces and upholstery, including all precautions against materials and methods which could damage upholstery fabric and/or its fire retardance characteristics.
   4. Catalog cuts for standard equipment
   5. "As-built" drawings showing all seating as installed.

K. Provide a full attic-stock inventory list.

1.08 WARRANTY

A. Warrant the equipment in this Section to be free of defective components, faulty workmanship and improper installation and adjustment for a period of 5 years after acceptance of the completed installation by the Owner. Items showing evidence of defective materials or workmanship shall be repaired and replaced at no cost to the Owner within 15 days of notification. Rectify conditions that might present a hazard to human life or property within 48 hours of notification. The Warranty shall not cover the results of normal use, nor shall it cover damage due to neglect or improper use or vandalism.

PART 2 PRODUCTS

2.01 PRODUCT REFERENCE

A. Product reference for the fixed seating is as follows or equal:
   1. Irwin Seating Model "Davies", which includes the following:
      a. Upholstered, self-rising 3/4 fold seat with black injection molded pan.
      b. No. 17 Davies molded plastic back with upholstered front.
      c. Maple hardwood end standard with block front.
      d. Steel center standards.
      e. Standard solid maple hardwood arm rests with comfort curve profile.
   2. Series Seating Model "Vera" detailed as described above is a pre-approved equal.
   3. Ducharme Seating Model "Comfort" detailed as described above is a pre-approved equal.

2.02 METAL COMPONENTS

A. Metal components shall be of sufficient gauge and designed to withstand normal use and abuse.

B. Metal components shall have smooth surfaces, including cut edges. Grind all welded connections smooth. Cut plate parts shall have dressed edges.

C. All exposed metal parts, including bolts and hardware, shall be powder-coated steel with a hybrid thermosetting powder coat finish. The powder coat finish shall be applied by electrostatic means to a thickness of 2 - 2.5 mils, and shall provide a durable coating having a 2H Pencil hardness. Prior to powder coating, metal parts shall be treated with a five-stage bonderization process for superior finish adhesion, and after coating shall be oven baked to cause proper flow of the epoxy powder to result in a smooth, durable finish.

D. Paint colors shall be determined by the Architect from within Manufacturer's standard color range. Paint application shall be of sufficient film depth to afford wear resistance of institutional quality.

2.03 WOOD

A. Plywood, whether exposed or concealed, shall be hardwood. Plywood shall be hot press laminated (16 plies per inch thickness minimum) using high frequency process. Interior plies shall be Maple, Class 3 or better. Exposed, exterior plies shall be select veneer Maple, Class 1, continuous, and selected as to color. Plies shall be of equal thickness, without voids or defects affecting appearance or performance.

B. Milled maple shall be clear, well-seasoned stock, containing no defects affecting appearance or performance, and shall be selected as to color.

C. Wood species shall be North American Maple.

2.04 WOOD FINISHES

A. All exposed wood parts shall be stained to the color selected by Architect from within the Manufacturer's standard color range and provided with a high-quality furniture finish, produced with two top coats of high density clear lacquer following stroke-sanding of raw wooden parts, sealing, and light preparatory sanding prior to both lacquer top coats. Film depth must be sufficient to afford wear resistance of institutional quality.

B. If field applied, wood finishes shall meet the requirements of Section 01415: VOC Limits for Adhesives, Sealants and Paints. The maximum allowable VOC content for lacquer is 275 grams/liter.

2.05 PADDING

A. Seat and back padding material shall be of new (prime manufacture) closed cell, medium density polyurethane foam. Padding material shall comply with the flammability requirements outlined in the California Technical Information Bulletin #117, Resilient Cellular Materials, Section A & D, dated February 1975, when tested in accordance with Federal Test Method Standard 191, Method 5903.2.

2.06 FABRICS

A. Seat Cushion Upholstery fabric shall be manufactured by TBD:
   a. Fabric Pattern: TBD
   b. Fabric Color: TBD
   c. Substitute fabric must be submitted to the architect for approval.
   d. An 8-inch square minimum fabric sample shall be submitted with relevant manufacturer and dye lot information.

B. Seat fabric material shall meet Class 1 flammability requirements of the U.S. Department of Commerce Commercial Standard 191-53 per Bulletin #117 and to applicable local codes. (Include Bulletin #133 for Boston or California)

C. Seat fabric shall meet wearability criteria – double rub – Wyzenbeek 100,000, heavy duty test.

2.07 SEAT PANS

A. Seat pans shall be self-rising, gravity return or compression spring.

B. Seat pans will have a variable density foam seat cushion.

C. Seat cushions shall be fully upholstered, with glass-filled, injection molded polypropylene pan fully enclosing the hinge mechanism.

D. Fabric covering sewn into box construction shall be without welts and securely attached without the use of staples, tacks or screws. Lock the first and last 1-1/2 inches of stitching. Fabric shall extend a minimum of 3/8-inch past the stitching.

E. Pivot and stop mechanisms shall be totally enclosed. All stops shall have neoprene pads for quiet operation.

F. Seat pan will have a seat bottom cover. The cover will be removable for authorized maintenance. The cover will be contoured to a shape compatible with the entire design and covered on all exposed surfaces with fabric matching other upholstered components.

G. Foam seat cushions shall be an assembly of five serpentine springs locked to the seat pan. Springs shall be covered with a minimum of 3-1/2 inches of molded polyurethane foam.

H. Seat pans should incorporate seat number identification plates recessed in the leading edge of the plywood reveal. Plates shall be natural satin anodized stamped aluminum with engraved black numbers and concealed/ tamper proof fixation hardware.

2.08 SEAT BACKS

A. Fabricate the chair backs as padded, upholstered components with molded black plastic outer back.

B. Back inside wood upholstery panel shall be of plywood of not less than 5-ply construction and not less than 5/16” thick.

C. Where inside upholstered panels and exposed back panels connect, they shall be formed on the same radius and mounted to each other using concealed fasteners.

D. Foam back cushions shall be minimum of 1½ inches and max of 2 ½ inches thick polyurethane foam cemented to the inside panel and covered with back fabric as outlined above.

E. All plastic component finishes shall match.

2.09 ARM RESTS

A. Armrests shall be solid Maple as per Architect’s sample and finished to match end standard. Armrests will be mounted onto metal standards. Armrests will have 2 keyhole slots to lock onto dovetail lugs on standards and one security screw.

B. The armrest must be capable of being fitted as a transfer armrest where necessary, as shown on drawings. The shape of these transfer armrests will have no visible difference to the non-transfer armrests. The transfer armrests will have natural satin anodized stamped aluminum plates to identify them with an ADA international insignia. Transfer armrests shall be mounted so that the hinge and hardware are hidden.

C. End-standard armrests shall incorporate concealed aisle lights as described below and located as indicated in Electrical Drawings.

D. End-standard armrests should incorporate row identification plates recessed in arm. Plates shall be natural satin anodized stamped aluminum with engraved black lettering and concealed/ tamper proof fixation hardware.

2.10 STANDARDS

A. Standards shall be floor mount 14-gauge (minimum) steel structure.

B. Center standards shall be modern pedestal welded steel design fabricated of 14-gauge steel to a 1” x 3” vertical rectangular column. Brackets for seat support shall be 7 gauge MIG-welded to pedestal. Wing plates for mounting backs to be 14 gauge steel. A 14 gauge steel foot shall be welded to bottom of column, all around column, and concealed on inside. Any protruding anchorage rod shall be capped with acorn nuts or approved equivalent. The standard shall be fabricated to be compatible with floor incline and to maintain seat and back height regardless of slopes. Standards shall be painted black.

C. Provide hinged end-standards (transfer arms) where shown on the drawings.

D. End-standards with transfer arms shall be of the same style and construction as normal end-standards with slight modification as necessary to accommodate hinges, floor slopes, and removable seating requirements.

E. End standards shall have row identification plates. Plate finish shall match sample by architect. (See 2.10.D.)

F. The end panels are to be minimum ¾-inch thick plywood with maple veneer and a 2-inch wide X ¾-inch thick solid block front, and shall be finished to match the back and seat bottom. End panel will be mounted onto metal standards.

2.11 AISLE LIGHTS

A. Aisle lights shall be low voltage LED non-hazardous fixtures, utilizing a miniature element in sufficient quantity to provide adequate illumination (minimum 2/10 foot candle) for floor and steps adjacent to the end-standards. The light assembly shall be recessed under the end-standard armrest, concealed from sight and protected from damage. The standard shall be completely pre-wired with an 18-inch lead extending beyond the standard.

B. Provide each standard with a 18” black flex-steel conduit connector through which the lead passes. Low-voltage cabling may use approved non-steel black flexible sleeving.

C. Provide dimmable transformers, suitably housed in steel safety enclosures and equipped with primary and secondary fuses, terminal blocks, and safety disconnects. The transformers shall be in a remote location, as shown on the Electrical drawings.

D. All electrical components shall be UL approved.

E. Wiring connections from the electrical distribution system to the end standards, as well as installation and connection of the voltage reduction device shall be by the Electrical Contractor.

F. Provide quantity and location of aisle lights as indicated in architectural drawings.

2.12 IMPACT CRITERIA

A. Seats shall be capable of withstanding the repeated impact of a 40-pound sand bag dropped onto the seat pan from a height of 12 inches. The front edge of the seat pan shall not drop more than 3/4 inch.

B. The seats shall be certified to withstand a 600 lbs. static load, laterally distributed three inches from the leading edge of the seat. The seat shall also be certified to pass seat cycle oscillation testing, ASTM Designation F851-87 Test Method for Self-Rising Seat Mechanism, and sandbag testing.

C. Seats shall be capable of withstanding without failure the repeated impact of two 40-pound sand bags suspended 10 inches below the top of the chair back and on both sides of the chair back.

2.13 SEAT NOISE

A. The seats shall be self-rising to the full fold, 90-degree position when unoccupied at all times without adjustment.

B. The self-rising mechanism shall be counterweight type. Down stops shall be cushioned with neoprene. Hardware shall be permanently lubricated. Stops shall be cushioned. Spring hinges are not acceptable.

C. Seat operation shall be nearly silent when the seat bottom returns to its upright position from the down position and when people shift positions while seated in the chair.

2.14 SEATING LAYOUT

A. Provide seats of varying widths with standards in each row spaced laterally so that the end standards will be in alignment from the first to last row, whether aisles are of constant or varying widths. The average seat width shall be at least 21 inches. Seating shall be staggered to optimize sightlines. Seat width distribution and seat quantities indicated on the Seating Drawings (TS-xxx) shall be reviewed and confirmed by the manufacturer.

B. Final seating layout shall be determined based on actual field conditions and measurements. If field conditions warrant a change in the seating layout, the Architect and Theatre Consultant shall be notified before installation. Changes in the layout shall be documented and approved by the Architect and Theatre Consultant prior to installation.

2.15 REMOVABLE SEATS

A. Provide removable seats where shown on the drawings.

B. A maximum of 3 seats shall be ganged.

C. Each removable seat or gang of seats for wheelchair viewing positions shall have self-contained arms.

D. Each removable seat or gang of seats shall have a quick-release device for attachment to floor. This shall consist of a thumbscrew and insert with threaded connection.

E. Provide a sled base for each removable seat, or group of seats.

F. The plug and receptacle for removable seats are to be furnished by the Seating Manufacturer and shall be NEMA ML-1P midget locking plugs. They shall be installed by the Electrical Contractor. The manufacturer shall coordinate with the Electrical Contractor, immediately upon receipt of approved shop drawings, the type and quantity of connectors required.

2.16 MAINTENANCE MATERIALS

A. Provide cut and sewn seat and back covers for 1 percent of the seating installed, per venue. Covers shall be produced at the same time, using identical fabric and shall be presented to the Owner upon completion of the seating installation. Cover sizes and colors shall be prorated according to the seating sizes in the final layout.

B. Provide an additional 30 yards per fabric for each type of upholstery, and each type shall be of the same dye lot as the balance of the project.

C. Provide complete spare chairs components for 1 percent of the installed seating, proportional to each configuration of seat supplied (e.g. removable seats, transfer arm seats, 20” seats, 21” seats, 22” seats, balcony back angle seats, orchestra back angle seats, etc.), with a minimum of 10 chairs per type/size, and a minimum of 1 piece per component.

PART 3 EXECUTION

3.01 PREPARATION

A. Before beginning the installation, check all construction and substrate materials to receive the seating to assure that they are sound, rigid, properly sized and located, level (or properly sloped), plumb and square, and that there is nothing to prevent proper and timely execution of the installation. All overhead work, including painting, staining, and finishing shall be finished prior to start of chair installation. Concrete floors shall have a clear 3” of 3000 psi concrete above top of metal deck fluting.

B. Do not proceed until unsatisfactory conditions have been corrected. Start of work shall indicate acceptance of the substrate and surrounding conditions.

3.02 PROTECTION OF EQUIPMENT

A. Protect the materials in this Section from soiling and damage during all phases of the work, from the time of manufacture to installation.

B. Cover the seats to protect them from dust, paint, and debris as required during and after installation.

3.03 COORDINATION

A. The Contractor is responsible for reviewing all drawings, specifications, and field conditions which affect the work in this Section. Notify the Architect whenever field measurements, analysis of the drawings and specifications, or progress of other trades indicates that the work in this Section cannot be completed as specified or as scheduled.

B. Within 6 weeks of the award of contract, and prior to the preparation of shop drawings, the Fixed Theatre Seating Contractor shall submit a written review of related work as it appears on the Contract Documents. The review shall identify errors, omissions or obstructions related to the installation and operation of the equipment in this Section. The sole intent of this written review is to identify potential problems as soon as possible. It is understood that some errors, omissions or obstructions may not be evident until the Contractor prepares shop drawings.

3.04 INSTALLATION

A. Installation shall be by the manufacturer or an authorized dealer or agent of the manufacturer. All installation work shall be carried out under the supervision of a capable superintendent experienced in the installation of seating of similar type and quality.

B. Coordinate the installation schedule as required with related trades.

C. Coordinate the cutting and coring of air supply and return holes with related trades, if applicable.

D. Commencement of installation means acceptance of site conditions.

E. The installation shall conform to the approved shop drawings and layout drawings and to the printed installation instructions of the manufacturer.

F. Floor anchorages shall be of sufficient strength and capacity to assure safe, rigid, and permanent attachment.

G. All related work for installation, such as drilling, coring, and cutting through finish floor materials in place at the time of installation shall be done as work of this Section.

H. Upon completion of the installation, adjust all operating parts and assemblies for proper quiet operation. Clean and polish all exposed surfaces.

I. Adjust seats as required to assure that seats in each row are aligned when in upright position.

3.05 CLEANING AND REPAIR

A. Remove all cartons, wrappings and debris associated with the installation from the building and legally dispose of same.

B. Upon completion of the installation, touch-up all marred finishes with coating to match factory-applied finish. Replace any unit whose finish cannot be restored to high quality appearance, in the opinion of the Architect and Theatre Consultant.
If field applied, wood finishes shall meet the requirements of Section 01415: VOC Limits for Adhesives, Sealants and Paints. The maximum allowable VOC content for lacquer is 275 grams/liter.

C. Replace upholstery which has been damaged in installation. Replacement of upholstery shall not deplete the extra materials stock.

D. Upon completion of the installation, leave all areas of installation broom clean.

3.06 DEMONSTRATION

A. Installed seating shall be inspected for quality by the Owner, the Architect and the Theatre Consultant.

B. Any necessary adjustments or modifications shall be made as required to comply with approved shop drawings.

C. Owner's designated staff or representatives shall be instructed in the care and maintenance of all items.

D. Tests and instruction to be scheduled in conformance with project construction schedules and the availability of the Owner, the Architect, the Acoustics Consultant, and the Theatre Consultant, pending on-time approvals of all prior requirements.

E. Cost of reinspection and additional testing by the Architect or the Theatre Consultant, if required due to lack of completion and/or errors and omissions made by the manufacturer or installer shall be paid by the Seating Contractor or the General Contractor respective to the area of work concerned. This work will be conducted on a time and materials basis, including the Architect's and the Theatre Consultant's standard hourly rates, and shall be scheduled and approved in writing prior to the reinspection/testing session between 1) the Architect, the Theatre Consultant and the Owner, and 2) the Owner and the contractor(s).

END OF SECTION

SECTION 12 6613
TELESCOPING BLEACHERS

PART 1 GENERAL

1.01 SECTION INCLUDES

A. Telescoping bleachers.

B. Electric motor operators, controls, and internal wiring.

1.02 RELATED REQUIREMENTS

A. Section 26 27 26 - Wiring Devices: Key-operated wall switch(es).

B. Section 26 27 17 - Equipment Wiring: Connection of electric motors and controls.

1.03 REFERENCE STANDARDS

A. NFPA 102 - Standard for Grandstands, Folding and Telescopic Seating, Tents, and Membrane Structures; National Fire Protection Association; 2011.

B. PS 1 - Structural Plywood; 2007.

C. AWS D1.1/D1.1M - Structural Welding Code - Steel; American Welding Society; 2010.

D. AWS D1.3 - Structural Welding Code - Sheet Steel; American Welding Society; 2008.

1.04 SUBMITTALS

A. See Section 01 30 00 - Administrative Requirements, for submittal procedures.

B. Product Data: Manufacturer's data sheets on each product to be used, including:
   1. Preparation instructions and recommendations.
   2. Storage handling and requirements.
   3. Installation methods.

C. Shop Drawings: Complete layout with dimensions, seat heights, row spacing and rise, aisle widths and locations, points of connection to substrate, assembly dimensions, and material types and finishes.
   1. Provide drawings customized to this project.
   2. Include Professional Engineer certification.
   3. Wiring Diagrams: Show locations of motors, electrical wiring, and rough-in connections.

D. Selection Samples: For each material for which color selection is required, submit samples, 2 by 2 inches in size, illustrating colors and finishes available.

E. Installer Qualifications: Installer qualifications indicating capability, experience, and official Certification Card issued by manufacturer of telescopic seating.

F. Warranty: Submit manufacturer warranty and ensure that forms have been completed in Owner's name and registered with manufacturer.

1.05 QUALITY ASSURANCE

A. Manufacturer Qualifications: Company specializing in manufacturing products specified in this section, with not less than three years of documented experience.

B. Installer Qualifications: Manufacturer's installation crew.

C. Welder Qualifications: Certified by AWS for the process employed.

1.06 DELIVERY, STORAGE, AND HANDLING

A. Store, in original packaging, under cover and elevated above grade.

1.07 WARRANTY

A. See Section 01 7800 - Closeout Submittals, for additional warranty requirements.

B. Correct defective Work within a five year period after Date of Substantial Completion. Replace parts that fail under normal use at no extra charge to Owner.

PART 2 PRODUCTS

2.01 MANUFACTURERS

A. Telescoping Bleachers:
   1. Interkal LLC, Forward fold series with Vari-Row and Comfort Seat Module: www.interkal.com.
   2. Irwin Telescopic Seating Company; 5000 series with Modular Deck Units and Infinity Seat Module : www.irwintelescopicseating.com.
   3. Hussey Seating Company, MAXAM Telescopic Gym Seat System: www.husseyseating.com.
   4. Substitutions: See Section 01 6000: Materials and Equipment.

2.02 TELESCOPING BLEACHERS

A. Telescoping Bleachers: Factory assembled tiered benches that retract horizontally into depth approximately the same as a single row depth, with fixed seats mounted on leading edge of platforms.
   1. Provide a design certified by a licensed Professional Engineer licensed in Delaware.
   2. Provide a design that has been in use for at least 5 years; submit documentation.
   3. Design to comply with applicable requirements of NFPA 102 and requirements of code authorities having jurisdiction; where conflicts between requirements occur, comply with whichever is more stringent.
   4. Design with solid fascia (riser) or seat fronts that conceal interior mechanisms when fully retracted, fitting tightly enough to prevent climbing up face; at front row provide key locked, hinged fascia (skirt) to cover gap between seat riser/fascia and floor.
   5. Configurations: As indicated on Contract Drawings.
   6. Wheelchair Spaces: Allow portions of first row, as indicated, to be manually retracted without affecting other rows; provide removable railings at row two behind wheelchair spaces.
   7. Cutouts: Fit units to irregular wall surfaces, columns, pilasters, roof drain leaders, and other obstructions; take field measurements prior to fabrication.
   8. Operation: Motor operated.

B. Design Loads: Design to withstand the following loading conditions:
   1. Live Load on Structural Supports: 100 psf, minimum, of gross horizontal projection.
   2. Live Load on Seats and Walking Surfaces: 120 pounds per linear foot.
   3. Lateral Sway Stress on Structural Supports: 24 pounds per linear foot of seat plank.
   4. Perpendicular Sway Stress on Structural Supports: 10 pounds per linear foot of seat plank.

C. Dimensions:
   1. Rows: See Drawings.
   2. Rise Per Row: 10 inches.
   3. Row Depth: 22 inches.
   4. Seat Height Above Tread: 6 inches.

D. Structural Supports: Steel or aluminum; manufacturer's standard wheeled carriages supporting each tier separately, with moving parts permanently lubricated and metal parts cushioned to prevent metal-to-metal contact during operation.
   1. Design so that each row carriage so that it will individually support the design loads and is self supporting when fully assembled without dependence on platform panels or boards, seats, or fascia.
   2. Welding: In accordance with AWS D1.1 and AWS D1.3.
   3. Bolting: Use lock-washers or locknuts.
   4. Wheels: Minimum 5 inch diameter by 1-1/8 inch wide, with non-marring rubber tires; ball, roller, or oil-impregnated metal bearings; minimum of 2 wheels at each floor support.
   5. Finish: Manufacturer's standard enamel or powder coating.
   6. Row Locking: Automatically mechanically lock each carriage to adjacent carriages when fully extended.
   7. Unlocking: Automatically unlock all rows before engaging retraction mechanism.

E. Motor Operation: Manufacturer's standard drive mechanism, using motor adequately sized for the purpose.
   1. All electrical components and wiring UL listed.
   2. Controls: Start, Stop, Forward, and Reverse in a single control unit.
   3. Control Station: Removable plug-in low-voltage pendant station, with first-row plug-in location for each motor.
   4. Limit Switches: Automatically stop operation when unit has reached fully open or fully closed position.
   5. Provide all wiring internal to bleacher units, to junction box located where indicated; ensure that wiring is not energized except during operation.
   6. Electrical Characteristics: 1/2 hp, 120/208V, three phase, 60 Hz.
   7. Provide access to motor from front side of bleachers; a hinged front skirt or hinged section at least 30 inches wide is acceptable.

2.03 SEAT AND PLATFORM COMPONENTS

A. Seat/Fascia Assembly: Continuous, molded UV-stabilized high-density polyethylene plastic, seat minimum 1 inch thick, textured finish, homogeneous color throughout, color as selected from manufacturer's standard selection; approximately 18 inch long sections independently removable with tongue-and-groove or rabbeted interlock at end joints.
   1. Shape: Ergonomically contoured, with internal ribs spaced for natural flexibility; rear edge cantilevered to provide toe room of not less than 3 inches; no openings to trap debris.
   2. Provide seats with back supports as shown.
   3. Provide end caps of same material and finish on each exposed end.
   4. Supports: Internal steel reinforcement of each seat segment bolted to platform nose member; minimum two bolts per segment.

B. Platform, Tread, and Step Structure: Plywood continuously supported on front and rear with side joints tongue-and-grooved.
   1. Plywood: PS 1, 5-ply southern pine or polyethylene-overlaid Douglas fir or southern pine, Grade A-C.
   2. Plywood Thickness: 3/4 inch., minimum.
   3. Front (Nose), Rear, and Intermediate Supports: Steel channel or tube, hot-dipped galvanized.

4. Provide end caps of same material and finish on each exposed end.
5. Finish: High gloss clear urethane, both sides, unless polyethylene finished.
6. Nosings: Extruded aluminum; clear anodized finish.
7. At aisles provide permanently attached intermediate steps of same construction and finish.
8. At bottom of aisles provide step in front of first riser, hinged to first platform to fold for storage.

2.04 HANDRAILS AND RAILINGS

A. Provide the following railings:
   1. Aisle Handrails: Self storing railing segment mounted in center of aisle at every other row beginning at row 2.
   2. End of Row Guardrails: Self-storing, at open ends of sections beginning at row 2.
   3. Height: 42 inches above adjacent platform or tread.

B. Design handrails and railings to withstand the following loads:
   1. Concentrated load on Handrails: of 200 pounds applied at any point and in any direction.
   2. Live Load on Handrails: Uniform load of 50 lbs. per foot applied in any direction
   3. Concentrated Load on Guardrails: 200 pounds in any direction along top rail.
   4. Live Load on Guardrails:
      a. Horizontal: 50 pounds per linear foot, applied at the guardrail height.
      b. Vertical: 100 pounds per linear foot, applied vertically to top of guardrail.

C. Railing Construction: Round steel pipe or tube, with formed elbows at corners and caps at ends of straight runs.
   1. Steel: 1-1/2 inch minimum outside diameter, with 11 gage minimum wall thickness; textured powder coat epoxy finish.

2.05 ACCESSORIES

A. Flex-Row: Provide first row modular recoverable seating units to be utilized by persons in wheelchairs and able-bodied persons. Each unit shall have an unlock handle for easy deployment if wheelchair or team seating access is needed. Unlock handle shall lock the bleacher seats into position when fully opened.
   1. Provide a black full-surround steel skirting with no more than ¾” floor clearance for safety and improved aesthetics.
   2. Provide a black injection molded end cap for the nose beam for safety and improved aesthetics.
   3. Provide a mechanical positive lock when the Flex-Row system is in the open and used position.

B. Fillers and Closures:
   1. Ends of Retracted Units: Plywood panels, finished to match platforms.
   2. Sides of Extended Units: Vinyl curtains.
   3. Vinyl Curtains: 18 ounce vinyl with grommets; standard color with Owner supplied graphics.

C. Extended Rear Deck Filler: Provide an extended rear deck filler mounted between rear wall building columns. Provide appropriate sized rear filler on each bleacher to allow for a continuous row of seating at the top row.

D. Video Platform: Size as shown on Drawings.

E. Fasteners: Provide hardware and fasteners in accordance with manufacturer’s recommendations.

F. Anchorage: As indicated on drawings; provide hardware in accordance with manufacturer's recommendations.

PART 3 EXECUTION

3.01 EXAMINATION

A. Verify that field measurements are consistent with those on the shop drawings.

B. Verify that electrical rough-ins have been installed and are accessible.

C. Do not begin installation until substrates have been properly prepared and area has been cleared of obstructions.

D. If substrate preparation is the responsibility of another installer, notify Architect of unsatisfactory preparation before proceeding.

3.02 PREPARATION

A. Clean surfaces thoroughly prior to installation.

B. Prepare surfaces using the methods recommended by the manufacturer for achieving the best result for the substrate under the project conditions.

3.03 INSTALLATION

A. Install in accordance with manufacturer's instructions.

B. Do not field cut or alter seats, fascia, or structural members without approval.

C. Provide manufacturer's field representative to inspect completed installation.

3.04 ADJUSTING

A. Lubricate, test, and adjust each moving assembly to ensure proper operation in compliance with manufacturer's recommendations.

3.05 CLEANING

A. Clean exposed and semi-exposed assembly surfaces.

B. Touch up finishes on damaged or soiled areas.

3.06 CLOSEOUT ACTIVITIES

A. Demonstration and Training: Provide manufacturer's field representative to demonstrate to and train Owner's operating personnel in proper operation of equipment.
   1. Location: On site using installed equipment.
   2. Time: As agreed between Owner and Contractor.
   3. Include video recording of training activities on DVD.

3.07 PROTECTION

A. Protect installed products until completion of project.

B. Touch-up, repair, or replace damaged products before Substantial Completion.

END OF SECTION

SECTION 12 6623
TELESCOPING CHAIR PLATFORMS

PART 1 GENERAL

1.01 RELATED DOCUMENTS

A. Drawings and general provisions of the Contract, including General and Supplementary conditions and Division 01 Specification Sections, apply to this Section.

1.02 SUMMARY

A. The entire contents of this specification are included in Alternate 27.

B. This section includes work in the following spaces:
   1. Black Box

C. The work in this Section includes all labor, materials and equipment to furnish and install the telescopic seating system described here and shown on the Contract Drawings.

D. Provide telescopic riser units and all accessory items required to achieve the seating configuration shown on the Contract Drawing. Accessory items include, but are not limited to, aisle lights, self-storing guardrails, fold down seating and steps.

E. Related sections include the following:
   1. Black Box floor
   2. Handrails and guardrails
   3. Electrical services and connections
   4. Performance lighting systems

1.03 WARRANTY

A. Warrant the equipment in this Section to be free of defects in materials and workmanship for a period of 5 years after acceptance of the completed installation by the Owner. Defective work shall be repaired and replaced at no cost to the Owner. The Warranty shall not cover the results of normal use, nor shall it cover damage due to neglect or improper use of the equipment.

1.04 SUBMITTALS

A. Submit shop drawings for fabrication and installation. Include plans, elevations, and details as required. Indicate materials, methods, finishes, attachments, and accessory items.

B. Submit verification that the floor is properly constructed and suitable for all phases of the telescopic riser operation.

C. Shop drawings shall indicate the load imposed on the floor when the riser is in both the extended and retracted positions.

D. The Manufacturer shall employ a registered, licensed engineer to certify that equipment supplied meets or exceeds the design criteria of the Contract Documents.

E. Provide samples of chair colors and fabrics, carpet, colored plastic, and painted material for the Architect's review.

F. Provide the Owner with an operation and maintenance manual.

PART 2 PRODUCTS

2.01 ACCEPTABLE MANUFACTURERS

A. The telescopic riser system shall be manufactured by one of the following:
   1. Audience Systems
      19B Washington Road, West Wilts Trading Estate
      Westbury, Wiltshire

BA13 4JP
Attn: Trenton Hill
207.651.2864

2. Jezet Seating
   Siberiëstraat 10
   3900 Overpelt
   Belgium
   Attn: Maria Fernandes
   514.518.8701
3. Seda Seating
   5200 Dryden Ave
   Burlington, ON L7L 7J2
   289.337.1674
   Attn: Jozef Lustig

2.02 FINSHES

A. Metal parts shall be free from rust, scale, dirt, and welding spatter. All weldments or other metal components shall receive a coat of corrosion resistant primer prior to finish coating and component assembly.

B. The steel understructure and risers shall be painted with corrosion resistant, low gloss enamel. Color: black.

C. Visible aluminum components, including nosings, shall have black powder-coated finish.

D. All exposed bolt and rivet heads shall be black or painted black.

2.03 DESIGN CRITERIA

A. Telescopic seating shall be designed to support, in addition to its own weight, and the weight of added accessories, a uniformly distributed live load of not less than 100 lbs. per square foot of gross horizontal projection.

B. Telescopic seating shall be designed to withstand a sway force applied to seats of 24 pounds per linear foot parallel to the seats and 10 pounds per linear foot perpendicular to the seats. Sway forces shall not be considered simultaneously applied.

C. Railings, posts and sockets shall be designed to withstand the following forces applied separately:
   1. A concentrated load of 200 pounds at any point and in any direction along the top railing member and;
   2. A uniform load of 50 pounds per foot applied horizontally at the required guardrail height and simultaneous uniform load of 100 pounds per foot vertically downward at the top of the guardrail. The concentrated and uniform loading conditions shall not be required to be applied simultaneously.

D. American Institute of Steel Construction (AISC), American Iron and Steel Institute (AISI) and Aluminum Association (AA) design criteria shall be the basis for calculation of member sizes and connections.

E. Wood members shall be designed in accordance with National Forest Products Association, (NFOPA), and National Design Specification for Wood Construction.

2.04 DESCRIPTION

A. The telescopic riser system shall consist of multiple tiers of closed deck chair platforms. Platforms shall be operable on the telescopic principal, stacking vertically in minimal floor area when not in use. All rows shall be mechanically locked, operable only when unlocking and

cycling the first row. Each platform row shall be comprised of a closed decking component, a complete set of supportive frames, braces and upholstered, integral chairs.

B. The first moving row shall be secured with both friction and mechanical locks. All other rows shall be mechanically locked, operable only upon unlocking and cycling of the first row.

2.05 EXTENSION / RETRACTION SYSTEM

A. Risers shall be mechanically opened and closed by a friction drive system. Each tiered row shall have mechanical locks to keep rows fully extended when in the open position. Row locks shall automatically release upon operation of release level in the front skirt panel. Hinging of the lower skirt board is not acceptable.

B. Partial opening shall be possible and risers shall lock into place individually.

2.06 FABRICATION

A. Steel supports and rolling frames shall be constructed of formed steel shapes of the size and shape necessary to support the design loads.

B. Wheels shall not be less than 6-inch non-marring soft rubber face to protect the floor surface. Each operating row shall have a minimum of 6 wheels.

C. Wheel channels shall be continuously in contact with adjacent channels by nylon guides, to eliminate metal to metal contact, and non-binding guide rods to provide alignment when opening and closing.

D. Cantilever arms shall be equipped with a heavy-duty roller to assure adequate row to row support and smooth operation. Cantilever arms shall be field adjustable.

E. Vertical columns shall be structural tube to meet design criteria.

F. Deck supports shall be bolted to the rear beam, nose, and deck board with locking hardware. Supports shall be equipped with a heavy duty roller to assure adequate row to row support and smooth operation.

2.07 AISLE STEPS

A. Aisle steps, if required, shall be permanently attached, closed design. The front step shall be hinged for storage on first row deck without the need for removal.

2.08 AISLE LIGHTS

A. Aisle lights to be located at the front of each row.

B. Lights shall be low voltage. Provide transformers and wiring as required.

2.09 GUARDRAILS

A. Guardrails shall be removable and normal to the manufacturer's standard.

2.10 CHAIRS

A. Basis of Design are as follows:
   1. Audience Systems "Accolade", with injection-molded back with cushion and fully upholstered seat.
   2. Jezet Seating "Ibis", with fully upholstered back and seat.
   3. Seda Seating "Karat", with fully upholstered back and seat.

B. Chairs shall be provided in varying widths to achieve staggered seating and even row ends.

C. Metal components shall be color TBD from the manufacturer's standard line.

D. Seats and backs shall be of high impact resistant injection molded polypropylene plastic, with a textured surface. Color shall be TBD from the manufacturer's standard line. The face of the seat and back shall be uninterrupted by surface grooves or exposed hardware.

E. Upholstery fabric shall be TBD.

F. Armrests shall be injection molded plastic, and shall be securely fastened to the support structure by concealed fastener, capable of rotating to a vertical position for storage. Armrest rotation mechanism shall be completely shrouded to prevent any pinching or snagging hazard. Armrests shall be color TBD from the manufacturer's standard line.

G. Chairs shall be beam-mounted for integral fold-down operation. Chair seats shall be fully cantilevered and hinged at the rear for semi-automatic storage within the depth of the risers. Chairs shall not extend beyond the face of the unit when closed.

H. Seats shall be self-rising to a uniform full fold.

I. Provide brushed aluminum row letters and seat numbers in manufacturer's standard font in black.

J. The raising and lowering of the chairs shall be accomplished with an internal spring assist system. Locking of chairs in the use position shall be independent of the platform operation. Manual lowering of the chairs shall be done by depressing a foot release lever allowing the chairs to fold flat on the deck surface.

2.11 CARPETING

A. Carpeted decking shall be 26-ounce commercial grade, low level, looped olefin fiber carpet with polypropylene backing. Apply carpet with to 5/8-inch carpet grade plywood. Color: TBD.

B. Nosing shall be one piece, formed, 14-gauge steel with black powder coated finish.

PART 3 EXECUTION

3.01 COORDINATION

A. The Contractor is responsible for reviewing all drawings, specifications, and field conditions which affect the work in this Section. Notify the Architect whenever field measurements, analysis of the drawings and specifications, or progress of other trades indicates that the work in this Section cannot be completed as specified or as scheduled.

3.02 JOB CONDITIONS

A. The Manufacturer is responsible for the equipment fitting the intended spaces without interference.

B. The Manufacturer shall visit the site and verify all dimensions and existing conditions. The Manufacturer shall survey the floor and advise the Architect of any irregularities which will adversely affect the operation of the telescopic riser system.

C. The Manufacturer shall be familiar with the work of adjoining trades and coordinate with their work.

3.03 PROTECTION OF EQUIPMENT

A. Protect the equipment in this Section from damage and deterioration, including rust, during all phases of the work, from the time of manufacture to installation.

B. Notify the General Contractor or Construction Manager in writing of jobsite conditions that would adversely affect the equipment after installation. Do not install the equipment if jobsite conditions beyond the control of the Riser Contractor will result in damage or deterioration, including rust.

C. Rust resulting from flaws in manufacturing and finishing shall be covered under the Warranty.

3.04 INSTALLATION

A. Install the risers in accordance with the Manufacturer's instructions and approved shop drawings.

B. Adjust all equipment for smooth and proper operation.

C. At the end of each day during the installation period, remove all refuse and scrap materials to designated collection points. Upon completion of the installation, leave all areas broom clean.

3.05 REPAIRS

A. Repair any work or finishes that are damaged during installation by the Contractor for the work in this Section. This includes work in this Section and the work of others. Where the work of others is damaged, reimburse the appropriate contractor for the repair.

3.06 PUNCHLISTING

A. The Contractor shall work with the General Contractor or Construction Manager to arrange for a punchlisting period for the work in this Section. Punchlisting shall consist of a minimum of one 4-hour day. The building schedule shall be such that no other conflicting or obstructing activity is taking place. The Contractor shall deploy and store the unit. The Contractor shall provide sufficient labor for the required service.

3.07 TRAINING

A. The Manufacturer shall conduct a demonstration and instruction session to assist the Owner in becoming familiar with the completed installation, and to personally instruct representatives of the Owner in the proper operation and maintenance of all equipment provided.

END OF SECTION 126623

SECTION 12 9313
BICYCLE RACKS

PART 1 GENERAL

1.01 SECTION INCLUDES

A. Bicycle racks.

1.02 RELATED REQUIREMENTS

A. Section 03 3000 - Cast-in-Place Concrete: Mounting surface for bicycle racks.

1.03 REFERENCE STANDARDS

A. ASTM A36/A36M - Standard Specification for Carbon Structural Steel; 2014.

B. ASTM A53/A53M - Standard Specification for Pipe, Steel, Black and Hot-Dipped, Zinc-Coated, Welded and Seamless; 2012.

C. ASTM A500/A500M - Standard Specification for Cold-Formed Welded and Seamless Carbon Steel Structural Tubing in Rounds and Shapes; 2013.

1.04 SUBMITTALS

A. See Section 01 3000 - Administrative Requirements, for submittal procedures.

B. Product Data: Manufacturer's data sheets on each product to be used, including:
   1. Preparation instructions and recommendations.
   2. Storage and handling requirements and recommendations.
   3. Installation methods.

C. Selection Samples: For each finish product specified, color chips representing manufacturer's full range of available colors and patterns.

1.05 DELIVERY, STORAGE, AND HANDLING

A. Store products in manufacturer's unopened packaging until ready for installation.

B. Handle racks with sufficient care to prevent scratches and other damage to the finish.

PART 2 PRODUCTS

2.01 MANUFACTURERS

A. Outdoor Bicycle Racks:
   1. Secure Site Design, LLC: http://www.securesitedesign.com
   2. Substitutions: See Section 01 6000 - Product Requirements.

2.02 BICYCLE RACKS

A. Outdoor Bicycle Racks:
   1. Product: Secure Site Design BRWS-101.
   2. Description: Single wide loop bike rack constructed of 2-3/8 in. (60mm) OD tubular steel pipe. 2 3/8” OD tubular steel.
   3. Mounting, Ground: In-ground anchor.
   4. Finish: Powder coat, maintenance-free and weather-resistant.
   5. Color: As selected by Architect from manufacturer's standard range.
   6. Accessories: In-ground grout cover.

B. Materials:
   1. Pipe: Carbon steel, ASTM A53/A53M, Schedule 40.
   2. Tube: Carbon steel, ASTM A500/A500M.
   3. Bar, Round and Flat, Carbon Steel: ASTM A36/A36M.

PART 3 EXECUTION

3.01 EXAMINATION

A. Examine surfaces to receive bicycle racks.

B. If substrate preparation is the responsibility of another installer, notify Architect of unsatisfactory preparation before proceeding.

C. Do not begin installation until unsatisfactory substrates have been properly repaired.

3.02 PREPARATION

A. Ensure surfaces to receive bicycle racks are clean, flat, and level.

3.03 INSTALLATION

A. Install in accordance with manufacturer's instructions.

B. Install bicycle racks level, plumb, square, and correctly located as indicated on drawings.

C. In-Ground Anchor Installation:

1. Prepare holes in size according to manufacturer’s instructions.
2. Place anchoring bolts through the holes in the pipe.
3. Lower rack into holes, ensuring the bottom of lower bends are at least 1-1/2 inch from the ground.
4. Pour concrete and level rack.
5. Support until dry.

3.04 CLEANING

A. Clean installed work to like-new condition. Do not use cleaning materials or methods that could damage finish.

3.05 PROTECTION

A. Protect installed products until completion of project.

B. Touch-up, repair or replace damaged products before Date of Substantial Completion.

END OF SECTION

SECTION 13 3420
METAL CUPOLA

PART 1 - GENERAL

1.01 SUMMARY

A. Pre-fabricated, metal cupolas, with base and trim.

B. Provide cupola work shown on the drawings, as specified herein, and as needed for a complete and proper installation.

C. Coordinate cupola work of this section with General Conditions and Supplementary Conditions.

1.02 SUBMITTALS

A. Submit shop drawings designed in accordance with local building code requirements.
   1. Provide stamped and sealed drawings of a Professional Engineer, licensed in the State of Delaware, on final shop drawing.

B. Submit color samples of exterior covering.

C. Submit certificates of insurance.

D. Submit close-out documents, warranties, and manuals.

1.03 QUALITY ASSURANCE

A. Structural Designer Qualifications: Professional Structural Engineer experienced in design of this work and licensed in the State in which the Project is located, or personnel under direct supervision of such an engineer.

B. Use adequate number of skilled workmen who are thoroughly trained and experienced in the necessary crafts, and who are completely familiar with the specified requirements and the methods needed for proper performance of the work of this Section.

C. Use materials which shall be free from defects impairing strength, durability, and appearance; shall be of best commercial quality for purpose required; and shall comply with approved drawings.

D. Use manufacturer who has had ten (10) years of experience in the manufacture of specified product.

1.04 WARRANTY

A. Warrant the product for two years after date of completed installation by manufacturer of product.

B. Warrant the product for one year after date of delivery of product installed by others.

PART 2 - PRODUCTS

2.01 MANUFACTURER

A. Manufacturer: Campbellsville Industries, Inc., P.O. Box 278, 440 Taylor Blvd., Campbellsville, KY 42718, Phone: 800/467-8135, Fax: 270/465-6839. Website: http://cvilleindustries.com. E-mail: steeple@cvilleindustries.com.

B. Use cupola design as shown on drawings.

C. Substitutions: See Section 01 6000: Materials and Equipment.

2.02 MATERIALS

A. Structural aluminum: Construction Manual of the Aluminum Association, Inc., alloy 6061-T6.

B. B. Use structural steel products according to ASTM specifications

C. Cladding: .032" aluminum, 3003-H14 alloy.

2.03 ACCESSORIES

A. Lightning protection consisting of UL listed air terminal and smooth, weaved, aluminum cable with 24 strands of 14 gage wire. Cable to extend 3' below base of the cupola for connection to ground by others.

B. Windows as shown.

C. Railing: Extruded aluminum

D. Finial: Extruded aluminum tube and spun aluminum ball

E. Form cornices, mouldings, and ornaments in accordance with approved drawings.

2.04 FABRICATION

A. Fabricate structural steel framing to conform to AWS standards.

B. Fabricate structural aluminum framing with cold driven aluminum rivets, limiting welding to secondary architectural members.

C. Steel base gussets to be isolated and attached to structural aluminum framing with stainless steel bolts.

D. Form all exterior cladding with good and acceptable sheet metal practices, and lock form all seams to greatest extent possible.

E. Fabricate window frames from extruded aluminum tube, true to dimensions, with welded joints ground smooth. Glazed with Krinklglas

F. Fabricate topping ornament true to dimensions, with welded or soldered joints, ground smooth.

G. Conceal all exterior fasteners to greatest extent possible.

H. Use cadmium plated bolts, nuts, and washers for anchoring.

I. Cast, stamp, form, and/or spin special ornaments in accordance with good and acceptable practices, and in accordance with approved drawings.

2.05 FINISHES

A. Use aluminum skin with Kynar 500 finishes, from manufacturer's stock colors of white for the body of the cupola with the cupola dome to match the building roof color.

B. Use Krinklglas from manufacture's stock colors of white, charcoal, or brass

C. Shop finish all aluminum accessories. Units shall be caustic etched, primed with 2 heavy coats of epoxy primer, and finished with 2 heavy coats minimum of enamel finish electrostatically applied and air dried.

D. Paint all aluminum surfaces in contact with steel with one heavy coat of zinc rich primer and isolate with 12 mil corrosion control tape.

E. Paint all steel surfaces with 2 heavy coats of zinc rich primer, followed by one coat of aluminized bituminous paint.

2.06 CAULKING

A. Clean and dry all surfaces to be caulked.

B. Apply with caulking gun, using nozzle of proper size to fit the joint width.

C. Refer to Section 079 200 for silicone sealant material.

PART 3 - EXECUTION

3.01 PREPARATION

A. Verify with owner or general contractor that site conditions are suitable and accessible for delivery and installation.

B. Confirm that all preparatory work is in place in accordance with approved shop drawings before delivery and installation.

3.02 INSTALLATION

A. Coordinate with other trades as required to assure proper and adequate installation.

B. Clean all soiled and dirty areas and touch up any scratches or abrasions to finish before lifting into position.

C. Install work with skilled workmen who are familiar with such work in accordance with approved shop drawings.

D. Use cadmium plated bolts, nuts, and washers for anchoring, unless anchoring materials are provided and installed by others.

E. Provide crane for unloading and hoisting product into position.

3.03 CLEAN-UP

A. Clean up all debris caused by work of this section

END OF SECTION

SECTION 14 2013
HYDRAULIC HOLELESS PASSENGER ELEVATOR

PART 1 GENERAL

1.01 SECTION INCLUDES

A. Complete elevator systems and installation.

1.02 RELATED SECTIONS

A. Division 1 - Temporary Facilities and Controls: Temporary power supply.

B. Section 03 30 00 - Cast-in-Place Concrete: Elevator pit foundation.

C. Section 04 20 00 - Unit Masonry Assemblies: Masonry hoistway enclosure; building-in and grouting hoistway door frames.

D. Section 05 5000 - Metal Fabrications: Pit ladder, Sill supports, sump pit cover, and overhead hoist beams.

E. Section 07 1353 - Sheet waterproofing of elevator pit walls and floor.

F. Division 21 - Fire Suppression Sprinklers: Sprinkler heads in hoistway.

G. Division 22 - Plumbing Equipment: elevator sump equipment.

H. Division 26 - Electrical service for elevators to and including shunt trip, breaker, disconnect switches at machine room door.

I. Division 27 - Voice and Data Communicatoin Cabling for telephone service to elevators.

J. Division 28: "Fire Alarm" for heat detectors in shafts and machine rooms to disconnect power from elevator equipment before sprinkler activation and for connection to elevator controllers.

K. Division 28: "Access Control" for card readers at elevator call stations.

1.03 REFERENCES

A. All current applicable codes including IBC, NFPA 101 and ANSI A117.1/ADAAG and State ADA requirements.

B. ASME A17.1 - Safety Code for Elevators and Escalators; The American Society of Mechanical Engineers, current edition adopted by Authority Having Jurisdiction.

C. ASME A17.2 - Guide for Inspection of Elevators, Escalators, and Moving Walks; The American Society of Mechanical Engineers, current edition adopted by Authority Having Jurisdiction.

D. DSFPR Part 5, Chapter 1, Section I-15.1*: All passenger elevators in a building shall be provided with a cab sized to accommodate an ambulance cot 24 inches by 76 inches in its horizontal open position.

1. * the words "to accommodate" in this context is intended to mean the cot is in the horizontal position and shall travel in to the elevator without having to modify the position. Additionally once the cot is in place in the cab, there should be room for at least two (2) EMS attendants.

1.04 SUBMITTALS

A. See Division 1 for submittal procedures.

B. Submit shop drawings. Indicate the following information:

1. Locations of machine room equipment: driving machines, controllers, governors and other component.

2. Hoistway components: Car, counterweight, sheaves, machine and sheave beams, guide rails, buffers, ropes, and other components.
3. Rail bracket spacing; maximum loads imposed on guide rails requiring load transfer to building structural framing.
4. Individual weight of principal components; load reaction at points of support.
5. Clearances and over-travel of car and counterweight.
6. Location and sizes of access doors, doors, and frames.
7. Applicable seismic design data.
8. Interface with building security system.
9. Electrical characteristics and connection requirements.

C. Show arrangement of equipment in machine room so equipment can be removed for repairs or replaced without disturbing other components. Arrange equipment for clear passage through access door.

D. Submit product data. Provide data on the following items:
1. Signal and operating fixtures, operating panels, indicators.
2. Cab design, dimensions, layout, and components.
3. Cab and hoistway door and frame details.
4. Electrical characteristics and connection requirements.

E. Samples: For initial selection, submit samples form manufacturer's standard selection. For verification, submit two samples, 3" square of sheet material or 4" length of running trim illustrating cab interior finishes, cab and hoistway door and frame finishes, and handrail material and finish.

F. Manufacturer Certificates: Signed by elevator manufacturer certifying that hoistway, pit, and machine room layout and dimensions, as shown on Drawings, and electrical service, as shown and specified, are adequate for elevator system being provided.

G. Maintenance Data. Include:
1. Parts catalog with complete list of equipment replacement parts; identify each entry with equipment description and identifying code.
2. Technical information for servicing operating equipment.
3. Legible schematic of hydraulic piping and wiring diagrams of installed electrical equipment and changes made in the Work. List symbols corresponding to identity or markings on machine room and hoistway apparatus.

1.05 QUALITY ASSURANCE

A. Perform Work in accordance with applicable code and as supplemented in this section.

B. Manufacturer Qualifications: Company specializing in manufacturing the Products specified in this section with minimum ten years documented experience.

C. Installer Qualifications: Company specializing in performing the work of this section and approved by elevator equipment manufacturer.

D. Regulatory Requirements: Comply with ASME A17.1 and elevator design requirements for earthquake loads in ASCE 7. Peale velocity acceleration (Av) Spectral response acceleration (Sds) /seismic design category to meet requirements for Odessa Campus zip code 19734.
1. Elevator importance factor is 1.

E. Source Limitations: Obtain elevators through one source from a single manufacturer.

1. Provide major elevator components, including pump-and-tank units,plunger-cylinder assemblies, controllers, signal fixtures, door operators, car frames, cabs, and entrances, manufactured by a single manufacturer

F. Accessibility Requirements: Comply with Section 4.10 in the U.S. Architectural & Transportation Barriers Compliance Board's "Americans with Disabilities Act (ADA), Accessibility Guidelines for Buildings and Facilities (ADAAG)

G. Fire-Rated Hoistway Entrance Assemblies: Door and frame assemblies complying with NFPA 80 that are listed and labeled by a testing and inspecting agency acceptable to authorities having jurisdiction, for fire-protection ratings indicated, based on testing at as close to neutral pressure as possible according to NFPA 252.

1.06 DELIVERY, STORAGE, AND HANDLING

A. Deliver, store, and handle materials, components and equipment in manufacturer's protective packaging.

B. Store materials, components, and equipment off of ground, under cover, and in a dry location. Handle according to manufacturer's written recommendations to prevent damage, deterioration, or soiling.

1.07 COORDINATION

A. Coordinate installation of sleeves, block outs, and items that are embedded in concrete or masonry for elevator equipment. Furnish templates and installation instructions and deliver to Project site in time for installation.

B. Coordinate sequence of elevator installation with other work to avoid delaying the Work.

C. Coordinate locations and dimensions of other work relating to hydraulic elevators including pit ladders, sumps, and floor drains in pits; entrance subsills; and electrical service, electrical outlets, lights, and switches in pits and machine rooms.

1.08 PRE-INSTALLATION MEETING

A. Review schedule of installation, installation procedures and conditions, and coordination with related work.

1.09 WARRANTY

A. See Division 1 Section - Closeout Procedures, for additional warranty requirements.

B. Provide full parts and labor warranty for period specified below.
   1. Warranty Period: One year from date of Substantial Completion.

1.10 MAINTENANCE SERVICE

A. Owner/User training: Provide digital video recorded training session for routine maintenance. Recording (DVD) shall be given to Owner.

B. Provide service and maintenance of elevator system and components for one year from Date of Substantial Completion. Provide service during normal working hours.

C. Continuing Maintenance Proposal: Provide a continuing maintenance proposal from Installer to Owner, in the form of a standard one-year; two-year & five-year maintenance agreement, starting on date initial maintenance service is concluded. State services, obligations, conditions, and terms for agreement period and for future renewal options.

D. Perform maintenance work using competent and qualified personnel under the supervision and in the direct employ of the elevator manufacturer or original installer.

PART 2 PRODUCTS

2.01 MANUFACTURERS

A. Product: Holeless hydraulic passenger elevator, 3500 lb capacity, of minimum dimensions to meet gurney transportation requirements.
   1. Acceptable Manufacturers:
      a. ThyssenKrupp Elevator
      b. Otis Elevator Co
      c. Schindler Elevator Corp
      d. Substitutions: See Division 1 Section - Product Requirements.
   2. All operating components to be manufactured by same entity, unless otherwise indicated.

2.02 ELEVATORS

A. Elevator Number(s): Elev. Nos. 1, 2 and 3

B. Type: Holeless, beside-the-car, single-acting, dual cylinder.

C. Rated Load 3500 lb

D. Rated Speed: 125 fpm.

E. Configuration, Openings, and Travel: Refer to Drawings.

F. Operation System: Single automatic

G. Additional controls: Restricted use.
   1. Provide provisions for card reader access control at each elevator landing.
   2. See Division 28 for Access Control requirements.
   3. Coordinate key card operations with Owner.

H. Power Supply: 480 volt, 3 phase, 60 Hz.
   1. Motor Rating: 30 horsepower.

I. Auxiliary Operations:
   1. Battery-powered lowering.

2.03 CAR ENCLOSURE

A. General: Provide steel-framed car enclosures with non-removable wall panels, with car roof, access doors, power door operators, and ventilation.
   1. Provide standard railings complying with ASME A17.1 on car tops where required by ASME A17.1.

B. Canopy: 14 gauge steel, powder coated.
   1. Emergency exit: Provide as required by code.

C. Ceiling:
   1. Downlight ceiling, #4 Stainless Steel, LED lighting.

D. Front Return Wall(s): 16 gauge #4 Stainless Steel.

E. Transom: 16 gauge #4 Stainless Steel.

F. Subfloor: Underlayment grade, exterior plywood, 5/8-inch (16-mm) nominal thickness.

G. Floor Finish:
   1. Floor prepared to receive resilient tile (specified in Division 9 Section "Resilient Floor Tile").

H. Car Fixtures: Satin stainless steel, No. 4 finish

I. Car Door(s): #5WL Textured stainless steel clad.

J. Car Sill(s): Extruded aluminum, with grooved surface.

K. Ventilation: Two-speed exhaust fan in car canopy controlled by key switch in car operating panel.

L. Side Walls and Rear Wall:
   1. Plastic laminate on cold-rolled galvanized steel wall panels with stainless steel vertical panel binders.
   2. Reveals: Black powder coat.
   3. Color/Pattern as selected by Architect.

M. Base:
   1. Plastic laminate, dull black finish.

N. Handrail(s): #4 Stainless Steel ½”x 1 ½”

O. Infrared curtain unit (ICU) door protection.

P. Additional Requirements:
   1. Provide inspection certificate in each car, mounted under acrylic cover with frame made from satin stainless steel, No. 4 finish
   2. Provide blanket hooks and two complete sets of full-height protective blankets.

2.04 HOISTWAY ENTRANCES

A. General: Provide manufacturer's standard horizontal-sliding, door-and-frame hoistway entrances complete with track systems, hardware, sills, and accessories. Provide frame size and profile to coordinate with hoistway wall construction.

B. Materials and Fabrication: Provide manufacturer's standards, but not less than the following:
   1. Stainless-Steel Frames: Formed from stainless-steel sheet, satin finish.
   2. Stainless-Steel Doors: Flush, hollow-metal construction; fabricated from stainless-steel sheet, 5WL textured finish..
   3. Sight Guards: Provide sight guards on doors matching door edges.
   4. Sills: Extruded aluminum, with grooved surface.
   5. Non-shrink, Nonmetallic Grout: Factory-packaged, nonstaining, noncorrosive, nongaseous grout complying with ASTM C 1107.

2.05 SIGNAL EQUIPMENT

A. General: Provide hall-call and car-call buttons that light when activated and remain lit until call has been fulfilled. Fabricate lighted elements with LEDs.

B. Car Control Stations: Provide manufacturer's standard recessed car control stations. Mount in return panel adjacent to car door, unless otherwise indicated.
   1. Mark buttons and switches with standard identification for required use or function that complies with ASME A17.1. Use both tactile symbols and Braille.
   2. Provide "No Smoking" sign matching car control station, either integral with car control station or mounted adjacent to it, with text and graphics as required by authorities having jurisdiction.

C. Emergency Communication System: Provide system that complies with ASME A17.1 and the U.S. Architectural & Transportation Barriers Compliance Board's "Americans with Disabilities Act (ADA), Accessibility Guidelines for Buildings and Facilities (ADAAG)." On activation, system dials preprogrammed number of monitoring station and identifies elevator location to monitoring station. System provides two-way voice communication without using a handset and provides visible signals that indicate when system has been activated and when monitoring

station has responded. System is contained in flush-mounted cabinet, with identification, instructions for use, and battery backup power supply.

D. Car Position Indicator: Provide digital-type car position indicator, located above car door or above car control station. Also provide audible signal to indicate to passengers that ear is stopping at floor served.
   1. Include travel direction arrows if not provided in car control station.

E. Hall Push-Button Stations: Provide one hall push-button station at each landing.
   1. Provide manufacturer's standard vandal-resistant recessed units with exposed face plates.
   2. Provide provisions for card reader at each push button station. Card readers shall be provided by Division 28 contractor.

2.06 EMERGENCY POWER

A. Arrange elevator operation to operate under emergency power when normal power supply fails.

B. Emergency Power Supply: Self-contained battery power.

C. Upon transfer to emergency power, advance elevator to a pre-selected landing, stop car, open doors, disable operating circuits, and hold in standby condition.

2.07 MACHINE ROOM FITTINGS

A. Wall-Mounted Frames: Glazed with clear plastic; sized as required. Provide one for master electric and hydraulic schematic and one for lubrication chart. Install charts.

B. Key Cabinet: Wall-mounted, lockable, keyed to building keying system, for control/operating panel keys.
   1. Provide two extra control/operating panel keys.

PART 3 EXECUTION

3.01 EXAMINATION

A. Verify existing conditions before starting work.

B. Verify that hoistway, pit, and machine room are ready for work of this section.

C. Verify hoistway shaft and openings are of correct size and within tolerance.

D. Verify location and size of machine foundation and position of machine foundation bolts.

E. Verify that electrical power is available and of the correct characteristics.

3.02 PREPARATION

A. Arrange for temporary electrical power for installation work and testing of elevator components.

3.03 INSTALLATION

A. Install system components. Connect equipment to building utilities.

B. Provide conduit, boxes, wiring, and accessories.

C. Mount machines on vibration and acoustic isolators, on bed plate and concrete pad. Place on structural supports and bearing plates. Securely fasten to building supports. Prevent lateral displacement.

D. Accommodate equipment in space indicated.

E. Install guide rails using threaded bolts with metal shims and lock washers under nuts. Compensate for expansion and contraction movement of guide rails.

F. Accurately machine and align guide rails. Form smooth joints with machined splice plates.
   1. Coordinate installation in hoistway wall construction.

G. Install hoistway door sills, frames, and headers in hoistway walls. Grout sills in place. Set entrances in vertical alignment with car openings and aligned with plumb hoistway lines.

H. Structural Metal Surfaces: Clean surfaces of rust, oil or grease; wipe clean with solvent; prime two coats.

I. Machine Room Components: Clean and degrease; prime one coat, finish with one coat of enamel.

J. Adjust equipment for smooth and quiet operation.

3.04 ERECTION TOLERANCES

A. Guide Rail Alignment: Plumb and parallel to each other in accordance with ASME A17.1.

B. Cab Movement on Aligned Guide Rails: Smooth movement, with no objectionable lateral or oscillating movement or vibration.

3.05 FIELD QUALITY CONTROL

A. Acceptance testing:
   1. Acceptance Testing: On completion of elevator installation and before permitting use (either temporary or permanent) of elevators, perform acceptance tests as required and recommended by ASME A17.1 and by governing regulations and agencies.
   2. Advise Owner, Architect, and authorities having jurisdiction in advance of dates and times tests are to be performed on elevators.

B. Demonstration
   1. Engage a factory-authorized service representative to train Owner's maintenance personnel to operate elevator. Refer to Division 1 Section "Demonstration and Training." Professionally record training session & provide owner with digital video tape or DVD.
   2. Check operation of elevator with Owner's personnel present and before date of Substantial Completion. Determine that operation systems and devices are functioning properly.
   3. Check operation of elevator with Owner's representative present not more than one month before end of warranty period. Determine that operation systems and devices are functioning properly.

C. Testing and inspection by regulatory agencies will be performed at their discretion.
   1. Schedule tests with agencies and notify Owner and Architect.
   2. Obtain permits required to perfonn tests.
   3. Document regulatory agency tests and inspections in accordance with the requirements of Division 1 Section - Quality Requirements.
   4. Perform tests required by regulatory agencies.
   5. Furnish test and approval certificates issued by authorities having jurisdiction.

3.06 ADJUSTING

A. Adjust for smooth acceleration and deceleration of car so not to cause passenger discomfort.

B. Adjust automatic floor leveling feature at each floor to achieve 1/4 inch from flush.

3.07 CLEANING AND PROTECTION

A. Remove protective coverings from finished surfaces.

B. Clean surfaces and components ready for inspection.

C. Do not permit construction traffic within cab after cleaning.

END OF SECTION

SECTION 14 2100
MACHINE ROOM-LESS (MRL) TRACTION ELEVATORS

PART 1 - GENERAL

1.01 SUMMARY

A. This Section specifies electric traction elevators.

B. Work Required:
   1. The work required under this section consists of all labor, materials and services required for the complete installation (including operational verification) of all the equipment required for the elevator(s) as herein specified.
   2. All work shall be performed in a first class, safe and workmanlike manner.
   3. In all cases where a device or part of the equipment is herein referred to in the singular, it is intended that such reference shall apply to as many of such devices or parts as are required to make complete installation.

C. Related Work
   1. Division 01 - Construction Facilities and Temporary Controls: protection of floor openings and personnel barriers; temporary power and lighting.
   2. Division 31 - Earthwork: excavation for elevator pit.
   3. Section 03 3000 - Cast-In-Place Concrete: elevator pit, and elevator machine foundation.
   4. Section 04 2000 - Unit Masonry: masonry hoistway enclosure, building-in and grouting hoistway doorframes, and grouting of sills.
   5. Section 05 5000 - Metal Fabrications: pit ladder and supports for entrances, rails and hoisting beam at top of elevator hoistway.
   6. Section 07 1300 - Sheet Waterproofing: waterproofing of elevator pit.
   7. Division 23 - Heating, Ventilating, and Air Conditioning: ventilation and temperature control of elevator equipment areas.
   8. Division 26 and 28 - Electrical, Electronic Safety and Security:
      a. Main disconnects for each elevator.
      b. Electrical power for elevator installation and testing.
      c. Disconnecting device to elevator equipment prior to activation of sprinkler system.
      d. The installation of dedicated GFCI receptacles in the pit and overhead.
      e. Lighting in controller area, machine area and pit.
      f. Wiring for telephone service to controller.
      g. Emergency (Standby) Power Supply Systems: emergency generator for elevator operation.
      h. Fire Alarm Systems: The installation of fire and smoke detectors at required locations and interconnecting devices; fire alarm signal lines to contacts in the machine area.
      i. Telephone Systems: ADAAG-required emergency communications equipment.
      j. Access Control: for card readers at elevator call stations.

D. Applicable Codes: Comply with applicable building and elevator codes at the project site, including but not limited to the following:
   1. ANSI A117.1, Buildings and Facilities, Providing Accessibility and Usability for Physically Handicapped People.
   2. ANSI/NFPA 70, National Electrical Code.
   3. ANSI/NFPA 80, Fire Doors and Windows.
   4. ASME/ANSI A17.7, Safety Code for Elevators and Escalators.

5. ANSI/UL 10B, Fire Tests of Door Assemblies.
6. Local Building Codes

1.02 SYSTEM DESCRIPTION: ELEVATOR NO. 4

A. Equipment Description: Gen2® gearless traction elevator with Machine Room-less application.

B. Equipment Control: Elevonic® Control System.

C. Quantity of Elevators: 1

D. Elevator Stop Designations:
   1. Elevator No. 4: LL, 1, 2

E. Stops (maximum): 3

F. Openings: 2 front, 1 rear.

G. Travel: as shown.

H. Rated Capacity: 3500 lb.

I. Rated Speed: 100 fpm

J. Cab Height: 8'-0"

K. Entrance Type and Width:
   1. Two-Speed Doors 3'-6”.

L. Entrance Height: 7’ 0”

M. Main Power Supply: 480 Volts + or - 5% of normal, three-Phase, with a separate equipment grounding conductor.

N. Car Lighting Power Supply: 120 Volts, Single-phase, 15 Amp, 60 Hz.

O. Machine Location: Inside the hoistway at the top Signal Fixtures: Manufacturer’s standard.

P. Controller Location: Controller(s) shall be located adjacent to the hoistway at the top landing in a controller space

Q. Performance:
   1. Car Speed: + 3 % of contract speed under any loading condition or direction of travel.
   2. Car Capacity: Safely lower, stop and hold up to 125% of rated load. (code required).

R. Ride Quality:
   1. Vertical Vibration (maximum): 12 - 17 milli-g
   2. Horizontal Vibration (maximum): 10 - 15 milli-g
   3. Vertical Jerk (maximum): 4.6 ± 1.0 ft./ sec3 (1.4 ± 0.3 m/ sec3)
   4. Acceleration/Deceleration (maximum): 2.6 ± .33 ft./ sec2 (0.8 ± 0.13 m/ sec2)
   5. In Car Noise: 50 - 55 dB(A)
   6. Stopping Accuracy: ± 0.2 in. (± 5 mm)
   7. Re-leveling Distance: ± 0.4 in. (± 10 mm)

S. Operation:
   1. Simplex Collective Operation: Using a microprocessor-based controller, operation shall be automatic by means of the car and hall buttons. If all calls in the system have been answered, the car shall park at the last landing served.

T. Operating Features - Standard
   1. Full Collective Operation
   2. Anti-nuisance.
   3. Fan and Light Protection.

4. Load Weighing Bypass.
5. Independent Service.
6. Full Collective Operation.
7. Firefighters' Service Phase I and Phase II
8. Top of Car Inspection.
9. Car to Lobby Operation.
10. Car Secure Access.
11. Provision for Card Reader at each Hall Station (Card Reader provided and Installed by others).

U. Door Control Features:
1. Door control to open doors automatically when car arrives at a landing in response to a normal hall or car call.
2. Elevator doors shall be provided with a reopening device that will stop and reopen the car door(s) and hoistway door(s) automatically should the door(s) become obstructed by an object or person.
3. Primary door protection shall consist of a two dimensional, multi-beam array projecting across the car door opening.
4. Door nudging operation to occur if doors are prevented from closing for an adjustable period of time.

V. Provide equipment according to seismic zone: Refer to Structural Drawings.

1.03 SUBMITTALS

A. Product Data: Submit manufacturer's product data for each system proposed for use. Include the following:
1. Signal and operating fixtures, operating panels and indicators.
2. Cab design, dimensions and layout.
3. Hoistway-door and frame details.
4. Electrical characteristics and connection requirements.
5. Expected heat dissipation of elevator equipment in hoistway (BTU).
6. Color selection chart for Cab and Entrances.

B. Shop Drawings: Submit approval layout drawings. Include the following:
1. Car, guide rails, buffers and other components in hoistway.
2. Maximum rail bracket spacing.
3. Maximum loads imposed on guide rails requiring load transfer to building structure.
4. Clearances and travel of car.
5. Clear inside hoistway and pit dimensions.
6. Location and sizes of access doors, hoistway entrances and frames.

C. Operations and Maintenance Manuals: Provide manufacturer's standard operations and maintenance manual.

1.04 QUALITY ASSURANCE

A. Permits, Inspections and Certificates: The Elevator Contractor shall obtain and pay for necessary Municipal or State Inspection and permit as required by the elevator inspection authority, and make such tests as are called for by the regulations or such authorities. These tests shall be made in the presence of such authorities or their authorized representatives.

B. Designer Qualifications: Design guide rails, brackets, anchors, and machine anchors under direct supervision of a Professional Structural Engineer experienced in design of work of this type and licensed in the State in which the Project is located.

C. Perform structural steel design, fabrication, and installation in accordance with AISC 360, Specification for Structural Steel Buildings. Perform seismic design in accordance with applicable code.

D. Perform welding of steel in accordance with AWS D1.1/D1.1M.

E. Fabricate and install door and frame assemblies in accordance with NFPA 80.

F. Perform electrical work in accordance with NFPA 70.

G. Maintain one copy of each quality standard document on site.

H. Manufacturer Qualifications: Company specializing in manufacturing the Products specified in this section with minimum ten years documented experience.

I. Installer Qualifications: Employees and supervisor on payroll of elevator equipment manufacturer.

J. Products Requiring Fire Resistance Rating: Listed and classified by UL.

K. Products Requiring Electrical Connection: Listed and classified by Underwriters Laboratories Inc. as suitable for the purpose specified and indicated.

1.05 WARRANTY

A. The elevator contractor's warranty covers defective material and workmanship.
   1. The warranty period shall extend one (1) year from the date of completion or acceptance thereof by beneficial use, whichever is earlier, of each elevator.
   2. The warranty excludes: ordinary wear and tear, improper use, vandalism, abuse, misuse, or neglect or any other causes beyond the control of the elevator contractor.

PART 2 - PRODUCTS

2.01 MANUFACTURERS

A. ThyssenKrupp Elevator: www.thyssenkruppelevator.com.

B. Otis Elevator Co; Gen2: www.otis.com.

C. Schindler Elevator Corp; 3300 MRL: www.us.schindler.com.

D. Kone Inc.

E. Substitutions: See Section 01 6000 - Product Requirements.

F. All components to be manufactured by same entity.

2.02 ELEVATOR NO 4:

A. Provide machine room-less traction passenger elevators.

B. Basis of Design: Gen2 manufactured by Otis Elevator Company.

C. Specifically, the system shall consist of the following components:
   1. Controller located entirely inside the hoistway. No extra machine room or control closet space required.
   2. An AC gearless machine using embedded permanent magnets mounted at the top of the hoistway.
   3. Polyurethane Coated-Steel Belts for elevator hoisting purposes.
   4. LED lighting standard in ceiling lights and elevator fixtures.
   5. Sleep mode operation for LED ceiling lights and car fan.

D. Approved Installer: Otis Elevator Company

E. Controller Components:

1. Controller: A microcomputer based control system shall be provided to perform all of the functions of safe elevator operation. The system shall also perform car and group operational control.
   a. All high voltage (110V or above) contact points inside the controller shall be protected from accidental contact when the controller doors are open.
   b. Controller shall be separated into two distinct halves; Motor Drive side and Control side. High voltage motor power conductors shall be routed so as to be physically segregated from the rest of the controller.
   c. Field conductor terminations points shall be segregated; high voltage (>30 volts DC and 110 VAC,) and low voltage (< 30 volts DC)
   d. Controllers shall be designed and tested for Electromagnetic Interference (EMI) immunity according to the EN 12016 (May 1998): "EMC Product Family Standards for lifts, escalators, and passenger conveyors Part 2 - immunity"
2. Drive: A Variable Voltage Variable Frequency AC drive system shall be provided.

F. Machine and Governor:
1. Machine: AC gearless machine, with a synchronous permanent-magnet motor, dual solenoid service and emergency disc brakes, mounted at the top of the hoistway.
2. Governor: The governor shall be a tension type car-mounted governor.
3. Buffers, Car and Counterweight: Oil type buffers shall be used.
4. Hoistway Operating Devices:
   a. Emergency stop switch in the pit
   b. Terminal stopping switches.
5. Positioning System: Consists of an encoder, reader box, and door zone vanes.
6. Guide Rails and Attachments: Guide rails shall be Tee-section steel rails with brackets and fasteners. Side counterweight arrangements shall have a dual-purpose bracket that combines both counterweight guide rails, and one of the car guide rails to building fastening.
7. Coated-Steel Belts: Polyurethane coated belts with high-tensile-grade, zinc-plated steel cords and a flat profile on the running surface and the backside of the belt. All driving sheaves and deflector sheaves should have a crowned profile to ensure center tracking of the belts. A continuous 24/7 monitoring system using resistance based technology has to be installed to continuously monitor the integrity of the coated steel belts and provide advanced notice of belt wear.
8. Governor Rope: Governor rope shall be steel and shall consist of at least eight strands wound about a sisal core center.

2.03 HOISTWAY ENTRANCES:

A. Fascia: Galvanized sheet steel shall be provided at the front of the hoistway.

B. Frames: Entrance frames shall be of bolted construction for complete one-piece unit assembly. All frames shall be securely fastened to fixing angles mounted in the hoistway and shall be of UL fire rated steel.

C. Sills shall be extruded aluminum.

D. Doors: Entrance doors shall be of metal construction with vertical channel reinforcements.
1. Door finish: 5WL Textures stainless steel.

E. Fire Rating: Entrance and doors shall be UL fire rated for 1-1/2 hour

F. Entrance Finish:
1. #4 Finish satin stainless steel

G. Entrance marking plates: Entrance jambs shall be marked with 4” x 4” (102 mm x 102 mm) plates having raised floor markings with Braille located adjacent to the floor marking. Marking plates shall be provided on both sides of the entrance.

H. Sight Guards: sight guards will be furnished with all doors painted to match with painted doors.

2.04 EQUIPMENT: CAR COMPONENTS

A. Car frame and Safety: A car frame fabricated from formed or structural steel members shall be provided with adequate bracing to support the platform and car enclosures. The car safety shall be integral to the car frame and shall be Type "B", flexible guide clamp type.

B. Cab:
   1. Steel Shell Cab with raised laminate hang on panels.
      a. Laminate to be selected from manufacturer’s catalog of choices.
      b. Brushed Stainless Steel finished base plate located at top and bottom

C. Car Front Finish: Satin Stainless Steel.

D. Car Door Finish: Satin Stainless Steel.

E. Ceiling Type:
   1. #4 Stainless Steel, LED downlights.

F. Emergency Car Lighting: An emergency power unit employing a 6-volt sealed rechargeable battery and totally static circuits shall be provided to illuminate the elevator car in the event of building power failure.

G. Fan: A one-speed 120 VAC fan will be mounted to the ceiling to facilitate in-car air circulation, meeting A17.1 code requirements.
   1. The fan shall be rubber mounted to prevent the transmission of structural vibration and will include a baffle to diffuse audible noise.
   2. A switch shall be provided in the car-operating panel to control the fan.

H. Handrail: Handrails shall be provided on the side and rear walls of the car enclosure. Handrails shall be 3/8” x 2” (9.5 mm x 51 mm) flat tubular handrail with a Brushed Steel.

I. Threshold: Extruded Aluminum.

J. Emergency Exit Contact: An electrical contact shall be provided on the car-top exit.

K. Guides: Rubber roller guides shall be mounted on the top and the bottom of the car and counterweight. Car roller guides shall be 6-1/4” (160mm) at the top of the car, and 6-1/4” (160mm) at the bottom. The counterweight roller guides shall be 3” (76mm) at the top and the bottom.

L. Platform: The car platform shall be constructed of metal. Load weighing device shall be mounted on the belts at the top of the hoistway.

M. The LED ceiling lights and the fan should automatically shut off when the system is not in use and be powered back up after a passenger calls the elevator and pushes a hall button.

2.05 SIGNAL DEVICES AND FIXTURES

A. Car Operating Panel: A car operating panel shall be provided which contains all push buttons, key switches, and message indicators for elevator operation. The car operating panel shall have a satin stainless steel finish
   1. A car operating panel shall be furnished. It shall contain a bank of round stainless steel, mechanical LED illuminated buttons. Flush mounted to the panel and marked to

correspond to the landings served. All buttons to have raised numerals and Braille markings with:

B. Vandal-Resistant, Flush satin stainless steel button with blue LED illuminating center jewel.

C. The car operating panel shall be equipped with the following features:
   1. Raised markings and Braille to the left hand side of each push-button.
   2. Car Position Indicator at the top of and integral to the car operating panel.
   3. Door open and door close buttons.
   4. Inspection key-switch.
   5. Elevator Data Plate marked with elevator capacity and car number.
   6. Help Button: The help button shall initiate two-way communication between the car and a location inside the building, switching over to another location if the call is unanswered, where personnel are available who can take the appropriate action. Visual indicators are provided for call initiation and call acknowledgement.
   7. Landing Passing Signal: A chime bell shall sound in the car to signal that the car is either stopping at or passing a floor served by the elevator.
   8. In car stop switch (toggle or key unless local code prohibits use)
   9. Firefighter's hat
   10. Firefighter's Phase II Key-switch
   11. Call Cancel Button

D. Car Position Indicator: A digital, LED car position indicator shall be integral to the car operating panel.

E. Hall Fixtures: Hall fixtures shall be provided with necessary push buttons and key switches for elevator operation.
   1. Integral Hall fixtures shall feature round stainless steel, mechanical buttons marked to correspond to the landings. Hall fixtures to be located in the entrance frame face or the wall. Buttons shall be in vertically mounted fixture. Fixture shall be Gold Satin finish.
   2. Vandal-Resistant, Flush satin stainless steel button with blue LED illuminating center jewel.
   3. Provide provisions for card reader at each hall station. Card readers shall be provided by Division 28 contractor.

F. Car Lantern and Chime: A directional lantern visible from the corridor shall be provided in the car entrance. When the car stops and the doors are opening, the lantern shall indicate the direction in which the car is to travel and a chime will sound.

G. Card Reader Provision

PART 3 - EXECUTION

3.01 PREPARATION

A. Take field dimensions and examine conditions of substrates, supports, and other conditions under which this work is to be performed. Do not proceed with work until unsatisfactory conditions are corrected.

3.02 INSTALLATION

A. Installation of all elevator components except as specifically provided for elsewhere by others.

B. Install system components. Connect equipment to building utilities.

C. Provide conduit, boxes, wiring, and accessories.

D. Mount machines on vibration and acoustic isolators, on bed plate and concrete pad. Place on structural supports and bearing plates. Securely fasten to building supports. Prevent lateral displacement.

E. Accommodate equipment in space indicated.

F. Install guide rails using threaded bolts with metal shims and lock washers under nuts. Compensate for expansion and contraction movement of guide rails.

G. Accurately machine and align guide rails. Form smooth joints with machined splice plates.

H. Bolt or weld brackets directly to structural steel hoistway framing.

I. Field Welds: Chip and clean away oxidation and residue, wire brush; spot prime with two coats.

J. Coordinate installation of hoistway wall construction.

K. Install hoistway door sills, frames, and headers in hoistway walls. Grout sills in place. Set entrances in vertical alignment with car openings and aligned with plumb hoistway lines.

L. Structural Metal Surfaces: Clean surfaces of rust, oil or grease; wipe clean with solvent; prime two coats.

M. Adjust equipment for smooth and quiet operation.

3.03 ERECTION TOLERANCES

A. Guide Rail Alignment: Plumb and parallel to each other in accordance with ASME A17.1 .

3.04 FIELD QUALITY CONTROL

A. Perform testing and inspection in accordance with requirements of Section 01 4000.
   1. Perform tests as required by ASME A17.2.
   2. Provide two weeks written notice of date and time of tests.
   3. Supply instruments and execute specific tests.

3.05 ADJUSTING

A. Adjust for smooth acceleration and deceleration of car so not to cause passenger discomfort.

B. Adjust automatic floor leveling feature at each floor to achieve 1/4 inch from flush.

3.06 CLEANING

A. Remove protective coverings from finished surfaces.

B. Clean surfaces and components ready for inspection.

3.07 PROTECTION

A. Do not permit construction traffic within cab after cleaning.

B. Protect installed products until project completion.

C. Touch-up, repair, or replace damaged products before Date of Substantial Completion.

3.08 MAINTENANCE

A. Perform maintenance work using competent and qualified personnel under the supervision and in the direct employ of the elevator manufacturer or original installer.

B. Provide service and maintenance of elevator system and components for one year from Date of Substantial Completion.

C. Examine system components monthly. Clean, adjust, and lubricate equipment.

D. Include systematic examination, adjustment, and lubrication of elevator equipment. Repair or replace parts whenever required. Use parts produced by the manufacturer of the original equipment. Replace wire ropes when necessary to maintain the required factor of safety.

E. Perform work without removing cars during peak traffic periods.

F. Provide emergency call back service during working hours for this maintenance period.

3.09 DEMONSTRATION

A. The elevator contractor shall make a final check of each elevator operation with the Owner or Owner's representative present prior to turning each elevator over for use. The elevator contractor shall determine that control systems and operating devices are functioning properly.

END OF SECTION

SECTION 14 4216
VERTICAL WHEELCHAIR LIFTS

PART 1 GENERAL

1.01 SECTION INCLUDES

A. Vertical Wheelchair Lifts: shaftway.

1.02 RELATED REQUIREMENTS

A. Section 03 3000 - Cast-in-Place Concrete

B. Section 06 1000 - Rough Carpentry

C. Section 09 2116 - Gypsum Board Assemblies

D. Division - Electrical: Dedicated telephone service and wiring connections; Lighting and wiring connections at top of shaft; Electrical power service and wiring connections.

1.03 REFERENCE STANDARDS

A. ASME A17.1 - Safety Code for Elevators and Escalators.

B. ASME A17.5 - Elevator and Escalator Electrical Equipment.

C. ASME A18.1 - Safety Standard for Platform Lifts and Stairway Chairlifts.

D. ICC/ANSI A117.1 - Accessible and Usable Buildings and Facilities.

E. NFPA 70 - National Electric Code.

1.04 SUBMITTALS

A. See Section 01 3000 - Administrative Requirements, for submittal procedures.

B. Product Data: Manufacturer's data sheets on each product to be used, including:
   1. Submit manufacturer's installation instructions, including preparation, storage and handling requirements.
   2. Include complete description of performance and operating characteristics.
   3. Show maximum and average power demands.

C. Shop Drawings:
   1. Show typical details of assembly, erection and anchorage.
   2. Include wiring diagrams for power, control, and signal systems.
   3. Show complete layout and location of equipment, including required clearances and coordination with shaftway.

D. Selection Samples: For each finished product specified, provide two complete sets of color chips representing manufacturer's full range of available colors and patterns.

1.05 QUALITY ASSURANCE

A. Manufacturer Qualifications: Firm with minimum 10 years experience in manufacturing of vertical platform lifts, with evidence of experience with similar installations of type specified.

B. Installer Qualifications: Licensed to install equipment of this scope, with evidence of experience with specified equipment. Installer shall maintain an adequate stock of replacement parts, have qualified people available to ensure fulfillment of maintenance and callback service without unreasonable loss of time in reaching project site.

1.06 REGULATORY REQUIREMENTS

A. Provide platform lifts in compliance with:
   1. ASME A18.1 - Safety Standard for Platform Lifts and Stairway Chairlifts.

2. ASME A17.1 - Safety Code for Elevators and Escalators.
3. ASME A17.5 - Elevator and Escalator Electrical Equipment.
4. NFPA 70 - National Electric Code.

1.07 DELIVERY, STORAGE, AND HANDLING

A. Store products in manufacturer's unopened packaging until ready for installation.

B. Store components off the ground in a dry covered area, protected from adverse weather conditions.

1.08 PROJECT CONDITIONS

A. Do not use wheelchair lift for hoisting materials or personnel during construction period.

1.09 WARRANTY

A. Warranty: Provide a two year limited warranty for wheelchair lift materials and workmanship

PART 2 PRODUCTS

2.01 MANUFACTURERS

A. Vertical Wheelchair Lifts:
1. Basis of Design: Garaventa: www.garaventalift.com

B. Products complying with specifucation requirements by the following other manufacturers are also approved:
1. Savaria: www.wantalift.com.
2. Harmar: www.harmar.com.
3. Substitutions: See Section 01 6000 - Product Requirements.

2.02 ENCLOSED VERTICAL WHEELCHAIR LIFT

A. Capacity: 750 lbs (340 kg) rated capacity.

B. Mast Height:
1. Basis of Design Model GVL SW-144: 135 inches maximum lifting height.

C. Nominal Clear Platform Dimensions:
1. Standard: 39 inches (992 mm) by 54 inches (1370 mm).

D. Platform Configuration:
1. Straight Through Entry/Exit: Front and rear openings.

E. Landing Openings:
1. Lower Landing: Door.
2. Intermediate Landing: Door
3. Upper Landing: Door.

F. Doors: Self-closing type.
1. Door Height: Flush mount, 80 inches.
2. Width: 42 inches
3. Door Construction: aluminum frame with panels of ¼-inch laminated safety glass and D-Handle Pull, 12 inches offset.

G. Door Construction:
1. Fire Rated Doors: 1-1/2 hour B label rating. Pre-hung, constructed of 16 gauge (1.5 mm) steel, with a vision panel, delayed action door closer, pull handle and integrated interlock. Doors mount flush to the inside wall of the shaftway.
2. Door Width:
a. Lower Landing:

1) 35-5/8 inches (905 mm).
b. Intermediate Landing:
1) 35-5/8 inches (905 mm).
c. Upper landing:
1) 35-5/8 inches (905 mm).

H. Power Door Operator: Automatically opens the door/gate when platform arrives at a landing. Will also open at landing by pressing call button or by gently pulling door.
1. ADA Compliant and obstruction sensitive.
2. Low voltage, 24 VDC with all wiring concealed.
3. Provide power operators at all doors.

I. Lift Components:
1. Machine Tower: Custom aluminum extrusion.
2. Base Frame: Structural steel tubing.
3. Platform Side Wall Panels: 16 gauge (1.5 mm) galvanized steel sheet.

J. Base Mounting and Access to Lift at Lower Landing:
1. Pit Mount: Lift to be mounted in pit with dimensions to meet manufacturers requirements for the platform size specified. Pit construction shall be in accordance to Section 03 3000 - Cast-in-Place Concrete.

K. Hydraulic Drive:
1. Drive Type: Chain hydraulic.
2. Emergency Operation: Manual device to lower platform and auxiliary battery power to raise or lower platform.
3. Safety Devices:
a. Slack chain safety device.
b. Shoring device.
4. Travel Speed: 17 fpm (5.2 m/minute).
5. Motor: 3.0 hp (2.2 kW); 24 volts DC.
6. Power Supply:
a. 120 VAC single phase; 60 Hz on a dedicated 15 amp circuit.
b. Powered by continuous building mains converted to 24 VDC equipped with auxiliary battery power system capable of running lift up and down for a minimum of 5 trips with rated load. Required for high usage lifts.

L. Platform Controls: 24 VDC control circuit with the following features.
1. Direction Control: Illuminated tactile and constant pressure buttons with dual platform courtesy lights and safety light.
2. Illuminated and audible emergency stop switch shuts off power to lift and activates audio alarm equipped with battery backup.
3. Keyed operation.
4. Emergency Telephone: Platform shall be equipped with ADA compliant autodialer telephone with a stainless steel faceplate. Telephone shall operate in the event of power failure. A telephone line shall be supplied to the lift site as specified under Division 26.
5. Arrival Gong and Digital Floor Display.

M. Call Station Controls: 24 VDC control circuit with the following features.
1. Direction Control: Illuminated and tactile constant pressure buttons with illuminated "in-use" indicator.
2. Safety indicator lamp.

3. Keyed operation.
4. Call Station Mounting:
   a. Lower:
      1) Wall mounted surface.
   b. Intermediate:
      1) Wall mounted surface.
   c. Upper:
      1) Wall mounted surface.

N. Safety Devices and Features:
1. Grounded electrical system with upper, lower, and final limit switches.
2. At all landings a solenoid activated interlock shall electrically monitor that the door is in the closed position and the lock is engaged before lift can move from landing.
3. Pit stop switch mounted on mast wall.
4. Electrical disconnect shall shut off power to the lift.

O. Finishes
1. Aluminum Extrusions: as selected by Architect.
2. Ferrous Components: Electrostatically applied baked powder finish, fine textured.
   a. Color: as selected by Architect

PART 3 EXECUTION

3.01 EXAMINATION

A. Do not begin installation until substrates have been properly prepared.

B. Verify shaft and machine space are of correct size and within tolerances.

C. Verify required landings and openings are of correct size and within tolerances.

D. Verify electrical rough-in is at correct location.

E. If substrate preparation is the responsibility of another installer, notify Architect of unsatisfactory preparation before proceeding.

3.02 PREPARATION

A. Clean surfaces thoroughly prior to installation.

B. Prepare surfaces using the methods recommended by the manufacturer for achieving the best result for the substrate under the project conditions.

3.03 INSTALLATION

A. Install lifts in accordance with applicable regulatory requirements including ASME A17.1, ASME A 18.1 and the manufacturer's instructions.

B. Install system components and connect to building utilities.

C. Accommodate equipment in space indicated.

D. Startup equipment in accordance with manufacturer's instructions.

E. Adjust for smooth operation.

3.04 FIELD QUALITY CONTROL

A. Perform tests in compliance with ASME A 17.1 or A18.1 and as required by authorities having jurisdiction.

B. Schedule tests with agencies and Architect, Owner, and Contractor present.

3.05 PROTECTION

A. Protect installed products until completion of project.

B. Touch-up, repair or replace damaged products before Substantial Completion.

END OF SECTION

SECTION 14 4313
ORCHESTRA LIFT

PART 1 GENERAL

1.01 RELATED DOCUMENTS

A. Drawings and general provisions of the Contract, including General and Supplementary conditions and Division 01 Specification Sections, apply to this Section.

1.02 WORK INCLUDED

A. The entire contents of this specification are included in Alternate 13.

B. The work of this Section includes all labor, materials, equipment and services necessary to complete the lift installation, as shown on the drawings and specified herein, including, but not limited to, the following:
   1. Lift mechanism
   2. Lift deck structure
   3. Safety devices, door interlocks, astragals
   4. Control devices

1.03 RELATED WORK

A. Related work for the lift which is not part of the work in this Section includes, but is not limited to, the following:
   1. A legal, waterproof hoist way with the features necessary to accommodate the lift, as shown on the Contractor's shop drawings
   2. Guide chases
   3. Power feeds and electrical work, including conduit and wire between control components, and terminations
   4. Wooden subfloor and finished floor
   5. Floor edge trims which permit attachment of astragal switches for shear edge protection.

B. Related work for the guardrail system includes, but is not limited to, the following:
   1. Concrete work which receives sockets

1.04 QUALITY ASSURANCE

A. All work and materials shall conform to the requirements of all applicable national and local codes.

B. This specification sets forth minimum safety standards, operational criteria, and minimum standards for quality in workmanship. It is the responsibility of the Contractor to furnish and install a safe, fully functional system designed and engineered by the Lift Contractor in compliance with the design intent of the Contract Documents.

1.05 SUBMITTALS

A. Submit the following with the bid:
   1. Bill of materials, with parts identified by common industry standard numbers and/or descriptions.
   2. Specified manufacturer's catalog cut sheets of all products called out in the bill of materials.
   3. Statement that the Manufacturer agrees to the warranty provisions.
   4. Projected timetable listing the time in weeks for each of the following activities:
      a. Shop drawing preparation
      b. Fabrication
      c. Shipping to site

d. System commissioning
e. As built drawing preparation

B. Shop Drawings
1. Submit shop drawings for review. Drawing sheet size shall be uniform. Submittals of more than 5 drawings shall be bound. Shop drawings shall include:
a. Hoistway construction details including:
1) Depth and location of guide rail chases
2) Concrete tolerances for size, level, and plumb
3) Embeds
4) Caissons
5) Electrical power

b. Lift details including:
1) Overall layout and dimensions
2) Lifting load capacity
3) Sustaining load capacity
4) Dead loads
5) Live loads imposed on building structure
6) Nominal travel speed
7) Quantity of preset stops
8) Platform superstructure construction, including related work accommodations

c. Plans on architectural drawings locating the following:
1) Junction boxes
2) Panels and cabinets
3) Astragal switches and safety interlocks
4) Electrical and control system components
5) Railing Socket locations
d. Electrical riser and interconnection diagrams.
e. Pictorial drawings of all major components including sub-assemblies, parts list, dimensions, material and finish notes, quality assurance listings, and any other applicable information.
f. Wiring diagrams of each component, including interconnections and locations of other components.
g. Accessories and spare parts list as specified, fully itemized.
2. Lift shop drawings shall be stamped by a structural engineer licensed in the state of Delaware.
3. Fabrication shall not commence until the Theatre Consultant and the Architect determine that the shop drawings comply with the design intent of the Contract Documents.
4. Shop drawings shall be revised and resubmitted as required.

C. Manuals
1. Provide an operations and maintenance manual to the Owner. The manual shall include:
a. System description
b. Operation instructions, including safety measures
c. Maintenance instructions, including recommended procedures and schedules for inspecting system components
d. Catalog cuts for all purchased equipment

2. Provide the above on letter size and/or tabloid size paper, bound in standard 3-ring binders. Also provide documents in printable electronic format, such as PDF or other universal format files, on thumb drives

D. Turnover
1. Submit the following to the Owner and Architect prior to turnover:
a. Inspection certificates and operating permits required by local agencies. Contractor shall pay for any expenses associated with certificates and permits.
b. Two electronic copies of the operations and maintenance manual as well as the shop drawings on thumb drives. Electronic copies shall be in PDF format.

E. As-built Drawings
1. Within one month of system acceptance, provide complete as-built drawings. The as-built drawings shall include:
a. Final shop drawings.
b. Final bill of materials.
2. Provide the as-built drawings on tabloid size paper, bound in standard 3-ring binders. Also provide as-built drawings in printable electronic format, such as PDF or other universal format files, on thumb drives.

1.06 WARRANTY

A. The Manufacturer shall warrant the equipment as follows:
1. Part One - According to the guarantee provisions in the General Conditions
2. Part Two - Additionally, for two years from acceptance of the systems, provide services detailed below:
a. Provide for the Owner’s operating staff a technical and operational assistance hotline and advice service at no additional cost for the duration of the warranty period. Such advice to be available during normal working hours and on evenings and weekends.
b. Provide all required maintenance or replacement within 30 days of notification by the Owner. Maintenance or repairs that affect the safe operation of the installation shall be accomplished within 48 hours.
c. The Warranty shall include one service visit by the Contractor. The visit shall take place at the end of the first year under Warranty. The Contractor shall consult with the Owner's staff, inspect the system, and perform any necessary maintenance and repair. The Contractor shall submit a report to the Owner and the Theatre Consultant after the service visit. The report shall include inspection and maintenance schedules based on the actual use of the equipment

PART 2 EQUIPMENT

2.01 ACCEPTABLE MANUFACTURER

A. The equipment shall be manufactured by only one of the following:
1. GALA Theatrical Equipment - Spiralift
2049 La Habra Glen
Escondido, CA 92026
Tel: 760 738 5555
2. Serapid, Inc. - LinkLift
5400 18 Mile Road
Sterling Heights, MI 58314
Tel: 586 274 0774

2.02 FINISHES

A. All metal parts shall be free from rust, scale, dirt, or welding spatter. All weldments or other metal components shall receive a coat of rust inhibitor primer prior to finish coating and component assembly.

B. Finish coat shall be flat alkyd enamel, colored black.

2.03 DESIGN CRITERIA

A. Lifting Capacity: 50 pounds per square foot live load, plus dead load.

B. Sustaining Capacity: 150 pounds per square foot live load, plus dead load

C. Nominal fixed travel speed: 10 feet per minute

D. Preset trim repeatability: 1/8 inch

E. Level tolerance: 1/8 inch

F. Lift structure minimum design factor: 5

G. Minimum design factor for lifting module: 3 times full static load

H. Minimum design factor for motor, shafting and gearboxes: 110 percent dynamic load

I. Minimum design factor for brake: 125 percent full static load

J. Maximum deflection: 1/4 inch or 1/720, whichever is greater, under full contact load

K. Natural frequency: 6 Hz minimum

L. Horizontal guide load criteria:
   1. 5 percent static load, plus dead load
   2. Seismic loads, as required by local codes

M. Vertical guide criteria, considering dead load plus 20 percent static load:
   1. Maximum deflection: 1/4 inch
   2. Natural frequency: 6 Hz minimum

N. Lift guides shall maintain the 1/4-inch clearance between the finished edges of the lift and adjacent edges.

O. Lift shall not drift.

P. Lift shall lock and remain stationary at any elevation, including random stops, while supporting the maximum sustaining capacity.

Q. Lift shall travel smoothly. Shuddering or abrupt stopping and starting shall be unacceptable.

2.04 PLATFORM

A. Provide a structural steel frame which meets the design criteria described above.

B. Provide steel joists 16 inches on center to accommodate attachment of the subfloor and finished floor.

C. Provide an opening in the lift platform structure for an access floor trap.

D. Coordinate the fabrication of the lift platform as required to accommodate the attachment of skirting.

2.05 DRIVE MECHANISM

A. Motors shall have high starting torque characteristics and magnetic brakes capable of a minimum of twice the torque of the motor.

B. The lift shall support the maximum sustaining load at any point in its travel when stopped during normal operation, when stopped by the activation of a safety device, or when stopped due to power failure.

C. Where applicable, lifting modules shall be synchronized to maintain the level tolerance described above. The synchronization system shall automatically stop the lift should the lift exceed the allowable level tolerance.

D. Provide a safety disconnect switch with E-stop at the lift motor.

2.06 GUIDES

A. Provide T-rail/capture guides/or approved equal to maintain lateral and rotational stability at any point in the travel of the lift.

B. Horizontal movement between the guide rail and guide shoe shall not exceed 1/8-inch at any point in the lift's travel.

2.07 LIMIT DEVICES

A. Provide an incremental encoder for position monitoring and preset trims.

B. Provide limit switches for high and low over-travel.

2.08 SHEAR EDGE PROTECTION

A. Provide heavy duty, pressure sensitive astragal switches at all shear edge conditions.

B. A minimum pressure of 2 pounds at any point shall activate the switch.

C. Adhesive attachment shall be unacceptable.

D. Coordinate astragal switch attachment to architectural surfaces as required.

2.09 DOOR INTERLOCKS

A. Provide electromagnetic locks for all doors which provide direct access to the lift area below stage level.

B. Provide a key switch outside each electrically locked door.
   1. Switch shall cut power to the lock for authorized access when the lift is not at that level.
   2. Label switch "KEY ENTRY"

C. Provide a mushroom head pushbutton inside each door.
   1. Pushbutton shall cut power to the lock for emergency egress.
   2. Label pushbutton "DOOR RELEASE"

2.10 RAILING INTERLOCKS

A. Provide interlock switches at the sockets for the removable audience seating railings.

2.11 WARNING SKIRTS

A. Provide a continuous net skirt along all lift edges where there is a potential falling hazard.

B. The net shall provide a visual warning for performers, musicians and technicians in the lift area.

C. The safety net shall travel with the lift. Provide continuous horizontal steel rods approximately 2 feet on center on the safety net to keep the net taut. Provide deflecting plates as required to keep the net clear of lift machinery.

D. Net shall be Sinco Products, 3/4-inch mesh debris net, or approved equal.
   1. Color shall be white.

2.12 SIGNAGE

A. Provide signs on all doors that provide direct access to the lift area below stage level.

B. Signs shall say, "Lift area ahead. Authorized personnel only beyond this point."

2.13 CONTROLS

A. Provide receptacles for hand-held control device as shown on the drawings.

B. Provide a hand-held control device. Device shall consist of the following:
   1. System key switch
   2. Dead man pushbuttons for operation
   3. Mushroom head emergency stop pushbutton
   4. Pushbuttons for each preset trim
   5. Hazard light for activation of safety devices, such as astragal switches
   6. Cord of sufficient length to extend from centerline of proscenium opening to the control receptacle.

C. Provide mushroom head emergency stop pushbuttons where shown on the drawings. Label the pushbuttons LIFT EMER STOP.

D. The lift shall have the following preset stops:
   1. Stage
   2. Audience
   3. Orchestra Pit

E. Lift control parameters shall include:
   1. Control display shall indicate when the lift is at a preset stop.
      a. Control display shall indicate distance between lift and stage floor when lift is between preset stops.
   2. Lift shall automatically stop when emergency stop pushbutton is activated.
      a. Lift shall not move until pushbutton is pulled out and the reset function on the control display is activated.
   3. Lift shall automatically stop and immediately travel 2 inches in the reverse direction when a shear edge switch is activated.
      a. Lift shall not move until the shear edge switch is cleared and the reset function on the control display is activated.
   4. Lift shall not move if an interlocked door is open or an interlocked guardrail is not in place.
      a. Lift shall not move until interlocked door is closed, guardrail is replaced, and the reset function on the control display is activated.
   5. Lift shall automatically stop when an interlocked door is opened by use of the local keyswitch, or when an interlocked guardrail is removed.
      a. Lift shall not move until door is closed and locked, guardrail is replaced, and the reset function on the control display is activated.
   6. Interlocked doors shall be electrically locked when lift is not at the same level.
   7. Interlocked doors shall be electrically locked when lift is operating.
   8. Lift shall not travel below seating area unless guardrails are installed.
   9. Lift shall not move if lift is out of level until the lifting modules are adjusted and the reset function on the control display is activated.
   10. Lift shall automatically stop if lift becomes out of level during operation.
      a. Lift shall not move until the lifting modules are adjusted and the reset function on the control display is activated.
   11. Red hazard indicator on the control display shall flash when any conditions above occur.
      a. Hazard indicator shall flash until hazard condition is corrected and the reset function on the control display is activated.

PART 3 EXECUTION

3.01 INSPECTION

A. The Contractor shall visit the site and examine all related conditions which affect the installation.

B. Notify the General Contractor in writing of any conditions which will impede the proper installation or performance of the lift.

C. Do not proceed with the lift installation until the unsatisfactory conditions have been corrected in a mutually acceptable manner.

3.02 COORDINATION

A. Coordinate the lift installation with the work of other trades as directed by the Architect and the General Contractor.

3.03 PROTECTION OF EQUIPMENT

A. Protect the equipment in this Section from damage and deterioration, including rust, during all phases of the work, from the time of manufacture to installation.

B. Notify the General Contractor in writing of jobsite conditions that would adversely affect the equipment after installation. Do not install the equipment if jobsite conditions beyond the control of the Lift Contractor will result in damage or deterioration, including rust.

C. Rust resulting from flaws in manufacturing and finishing shall be covered under the Warranty.

D. Protect all mechanical components from dust and dirt during all phases of the work.

3.04 CLEANING AND REPAIRS

A. Clean the lift superstructure and mechanical components upon completion of the installation.

B. Repair any work or finishes that are damaged during installation by the Contractor for the work in this Section. This includes work in this Section and the work of others. Where the work of others is damaged, reimburse the appropriate contractor for the repair.

3.05 TEMPORARY PROTECTION

A. Lift Contractor is responsible for maintaining safety of lift area and safe operation of lift.

B. Lift Contractor shall provide temporary guardrails, barriers, and warning signs.

C. Lift Contractor shall inform the Architect and General Contractor in writing of any unsafe conditions which are beyond the Lift Contractor's control, such as absence of guardrail protection and unauthorized or improper operation of the lift.

3.06 COMMISSIONING AND INSPECTION

A. Provide to the Architect and Theatre Consultant a written report confirming that the system has been properly installed and is ready for inspection.

B. The Architect and Theatre Consultant (or their representatives) shall witness a full demonstration by the Lift Contractor of each feature of each piece of equipment in the system. Comply with the following conditions:
   1. The Lift Contractor shall provide all necessary personnel and equipment to demonstrate fully the system’s compliance to the specifications.
   2. Contractor’s project representative shall be present during testing as required.
   3. Full and uninterrupted access to all areas shall be provided as necessary for complete testing and demonstration.

C. Subject to satisfactory on-site demonstration, the Owner’s representative shall accept the equipment on behalf of the Owner.

D. Should the demonstration prove unsatisfactory, the Theatre Consultant and the Architect shall inform the Lift Contractor in writing, and the Lift Contractor shall rectify the problems.
   1. Problems shall be rectified in the shortest time possible.
   2. During this period of remedial work, the Owner shall have beneficial use of the equipment.

3. The Warranty period shall commence upon final acceptance by the Owner.
4. If substantial portions of the installation are not complete, the Lift Contractor shall compensate the Theatre Consultant for time spent and travel expenses. Compensation shall be at the Theatre Consultant's prevailing hourly and per diem rates.

3.07 TRAINING

A. Instruct the owner's staff in the proper operation and maintenance of the systems for at least 2 full days at a date and time convenient to the Owner.

END OF SECTION