SPECIFICATIONS

FOR

THE NEW WHITEHALL ELEMENTARY SCHOOL

APPOQUINIMINK SCHOOL DISTRICT

NEW CASTLE COUNTY, DELAWARE

Project # 1621

Appoquinimink School District

THE WORLD IS OUR CAMPUS

Architect:
Gilbert Architects, Inc
626 N. Charlotte Street
Lancaster, PA 17603
717-291-1077

Structural Engineer:
Baker, Ingram & Associates
8 N. Queen Street
Lancaster PA 17603
717-290-7400

Site Engineer:
Vandemark & Lynch, Inc.
4305 Miller Road
Wilmington, DE 19802
302-764-7635

Specification Consultant:
Associated Spec Consultants
610-489-4603

Mechanical/Electrical Engineer:
Furlow Associates
1206 Society Drive
Clamont, DE 19703
302-798-3515

Food Service Consultant:
Nyikos Associates, Inc.
18205-A Flower Hill Way
Gaithersburg, Maryland 20879
204-683-9530

Construction Manager:
EDIS Company
110 South Poplar Street
Wilmington, DE 19805
800-995-3347

PROJECT MANUAL – VOLUME 2
Divisions 03 thru 14

BID DOCUMENTS – October 13, 2017

gilbert Architects Inc.

626 N. Charlotte Street, Lancaster PA 17603 P: 717.291.1077 F: 717.392.3923 W: gilbertarchitects.com

SECTION 033000

CAST-IN-PLACE CONCRETE

PART 1 - GENERAL

1.1 RELATED DOCUMENTS

A. Drawings and general provisions of the Contract, including General and Supplementary Conditions and Division 01 Specification Sections, apply to this Section.

1.2 SUMMARY

A. Section includes cast-in-place concrete, including formwork, reinforcement, concrete materials, mixture design, placement procedures, and finishes.

1.3 DEFINITIONS

A. Cementitious Materials: Portland cement alone or in combination with one or more of the following: blended hydraulic cement, fly ash, slag cement, other pozzolans, and silica fume; materials subject to compliance with requirements.

B. W/C Ratio: The ratio by weight of water to cementitious materials.

1.4 PREINSTALLATION MEETINGS

A. Preinstallation Conference: Conduct conference at Project site.

1. Before submitting design mixtures, review concrete design mixture and examine procedures for ensuring quality of concrete materials. Require representatives of each entity directly concerned with cast-in-place concrete to attend, including the following:

    a. Contractor's superintendent.
    b. Independent testing agency responsible for concrete design mixtures.
    c. Ready-mix concrete manufacturer.
    d. Concrete Subcontractor.
    e. Special concrete finish Subcontractor.

2. Review special inspection and testing and inspecting agency procedures for field quality control, concrete finishes and finishing, cold- and hot-weather concreting procedures, curing procedures, construction contraction and isolation joints, and joint-filler strips, semirigid joint fillers, forms and form removal limitations, shoring and reshoring procedures, vapor-retarder installation, anchor rod and anchorage device installation tolerances, steel reinforcement installation, methods for achieving specified floor and slab flatness and levelness floor and slab flatness and levelness measurement, concrete repair procedures, and concrete protection.

1.5 ACTION SUBMITTALS

A. Product Data: For each type of product.

B. Design Mixtures: For each concrete mixture. Submit alternate design mixtures when characteristics of materials, Project conditions, weather, test results, or other circumstances warrant adjustments.

1. Indicate amounts of mixing water to be withheld for later addition at Project site.

C. Steel Reinforcement Shop Drawings: Placing Drawings that detail fabrication, bending, and placement. Include bar sizes, lengths, material, grade, bar schedules, stirrup spacing, bent bar diagrams, bar arrangement, splices and laps, mechanical connections, tie spacing, hoop spacing, and supports for concrete reinforcement.

D. Construction Joint Layout: Indicate proposed construction joints required to construct the structure.

1. Location of construction joints is subject to approval of the Architect.

1.6 INFORMATIONAL SUBMITTALS

A. Qualification Data: For Installer.

B. Welding certificates.

C. Material Certificates: For each of the following, signed by manufacturers:

1. Cementitious materials.
2. Admixtures.
3. Form materials and form-release agents.
4. Steel reinforcement and accessories.
5. Fiber reinforcement.
6. Waterstops.
7. Curing compounds.
8. Floor and slab treatments.
9. Bonding agents.
10. Vapor retarders.
11. Semirigid joint filler.
12. Joint-filler strips.
13. Repair materials.

D. Material Test Reports: For the following, from a qualified testing agency:

E. Floor surface flatness and levelness measurements indicating compliance with specified tolerances.

F. Field quality-control reports.

G. Minutes of preinstallation conference.

1.7 QUALITY ASSURANCE

A. Installer Qualifications: A qualified installer who employs on Project personnel qualified as ACI-certified Flatwork Technician and Finisher and a supervisor who is an ACI-certified Concrete Flatwork Technician.

B. Manufacturer Qualifications: A firm experienced in manufacturing ready-mixed concrete products and that complies with ASTM C 94/C 94M requirements for production facilities and equipment.

1. Manufacturer certified according to NRMCA's "Certification of Ready Mixed Concrete Production Facilities."

C. Welding Qualifications: Qualify procedures and personnel according to AWS D1.4/D 1.4M.

1.8 DELIVERY, STORAGE, AND HANDLING

A. Steel Reinforcement: Deliver, store, and handle steel reinforcement to prevent bending and damage.

1.9 FIELD CONDITIONS

A. Cold-Weather Placement: Comply with ACI 306.1 and as follows. Protect concrete work from physical damage or reduced strength that could be caused by frost, freezing actions, or low temperatures.

1. When average high and low temperature is expected to fall below 40 deg F for three successive days, maintain delivered concrete mixture temperature within the temperature range required by ACI 301.
2. Do not use frozen materials or materials containing ice or snow. Do not place concrete on frozen subgrade or on subgrade containing frozen materials.
3. Do not use calcium chloride, salt, or other materials containing antifreeze agents or chemical accelerators unless otherwise specified and approved in mixture designs.

B. Hot-Weather Placement: Comply with ACI 301 and ACI 305.1, and as follows:

1. Maintain concrete temperature below 90 deg F at time of placement. Chilled mixing water or chopped ice may be used to control temperature, provided water equivalent of ice is calculated to total amount of mixing water. Using liquid nitrogen to cool concrete is Contractor's option.
2. Fog-spray forms, steel reinforcement, and subgrade just before placing concrete. Keep subgrade uniformly moist without standing water, soft spots, or dry areas.

PART 2 - PRODUCTS

2.1 CONCRETE, GENERAL

A. ACI Publications: Comply with the following unless modified by requirements in the Contract Documents:

1. ACI 301.

2. ACI 117.

2.2 FORM-FACING MATERIALS

A. Smooth-Formed Finished Concrete: Form-facing panels that provide continuous, true, and smooth concrete surfaces. Furnish in largest practicable sizes to minimize number of joints.

1. Plywood, metal, or other approved panel materials.

B. Rough-Formed Finished Concrete: Plywood, lumber, metal, or another approved material. Provide lumber dressed on at least two edges and one side for tight fit.

C. Pan-Type Forms: Glass-fiber-reinforced plastic or formed steel, stiffened to resist plastic concrete loads without detrimental deformation.

D. Void Forms: Biodegradable paper surface, treated for moisture resistance, structurally sufficient to support weight of plastic concrete and other superimposed loads.

E. Chamfer Strips: Wood, metal, PVC, or rubber strips, 3/4 by 3/4 inch, minimum.

F. Rustication Strips: Wood, metal, PVC, or rubber strips, kerfed for ease of form removal.

G. Form-Release Agent: Commercially formulated form-release agent that does not bond with, stain, or adversely affect concrete surfaces and does not impair subsequent treatments of concrete surfaces.

1. Formulate form-release agent with rust inhibitor for steel form-facing materials.

H. Form Ties: Factory-fabricated, removable or snap-off glass-fiber-reinforced plastic or metal form ties designed to resist lateral pressure of fresh concrete on forms and to prevent spalling of concrete on removal.

1. Furnish units that leave no corrodible metal closer than 1 inch to the plane of exposed concrete surface.
2. Furnish ties that, when removed, leave holes no larger than 1 inch in diameter in concrete surface.
3. Furnish ties with integral water-barrier plates to walls indicated to receive dampproofing or waterproofing.

2.3 STEEL REINFORCEMENT

A. Reinforcing Bars: ASTM A 615/A 615M, Grade 60, deformed.

B. Low-Alloy-Steel Reinforcing Bars: ASTM A 706/A 706M, deformed.

C. Steel Bar Mats: ASTM A 184/A 184M, fabricated from ASTM A 615/A 615M, Grade 60, deformed bars, assembled with clips.

D. Plain-Steel Welded-Wire Reinforcement: ASTM A 1064/A 1064M, plain, fabricated from as-drawn steel wire into flat sheets.

E. Galvanized-Steel Welded-Wire Reinforcement: ASTM A 1064/A 1064M, plain, fabricated from galvanized-steel wire into flat sheets.

2.4 REINFORCEMENT ACCESSORIES

A. Joint Dowel Bars: ASTM A 615/A 615M, Grade 60, plain-steel bars, cut true to length with ends square and free of burrs.

B. Bar Supports: Bolsters, chairs, spacers, and other devices for spacing, supporting, and fastening reinforcing bars and welded-wire reinforcement in place. Manufacture bar supports from steel wire, plastic, or precast concrete according to CRSI's "Manual of Standard Practice," of greater compressive strength than concrete and as follows:

1. For concrete surfaces exposed to view, where legs of wire bar supports contact forms, use CRSI Class 1 plastic-protected steel wire or CRSI Class 2 stainless-steel bar supports.

2.5 CONCRETE MATERIALS

A. Source Limitations: Obtain each type or class of cementitious material of the same brand from the same manufacturer's plant, obtain aggregate from single source, and obtain admixtures from single source from single manufacturer.

B. Cementitious Materials:

1. Portland Cement: ASTM C 150/C 150M, Type I/II.
2. Fly Ash: ASTM C 618, Class F.
3. Slag Cement: ASTM C 989/C 989M, Grade 100 or 120.

C. Normal-Weight Aggregates: ASTM C 33/C 33M, Class 3S coarse aggregate or better, graded. Provide aggregates from a single source.

1. Maximum Coarse-Aggregate Size: 1-1/2 inches for forms, 1 inch for walls and piers, and 3/4 inch for slabs.
2. Fine Aggregate: Free of materials with deleterious reactivity to alkali in cement.

D. Air-Entraining Admixture: ASTM C 260/C 260M.

E. Chemical Admixtures: Certified by manufacturer to be compatible with other admixtures and that do not contribute water-soluble chloride ions exceeding those permitted in hardened concrete. Do not use calcium chloride or admixtures containing calcium chloride.

1. Water-Reducing Admixture: ASTM C 494/C 494M, Type A.
2. Retarding Admixture: ASTM C 494/C 494M, Type B.
3. Water-Reducing and Retarding Admixture: ASTM C 494/C 494M, Type D.
4. High-Range, Water-Reducing Admixture: ASTM C 494/C 494M, Type F.

2.6 WATERSTOPS

A. Self-Expanding Butyl Strip Waterstops: Manufactured rectangular or trapezoidal strip, butyl rubber with sodium bentonite or other hydrophilic polymers, for adhesive bonding to concrete, 3/4 by 1 inch.

1. Waterstops: Provide bentonite-based waterstop with 75% bentonite/ 25% Butyl rubber:

a. CETCO; “Waterstop-RX”.

b. Tremco; “Parastop II”.
c. Carlisle Coating & Waterproofing, Inc.; “CCW MiraSTOP”.

2.7 VAPOR RETARDERS

A. Sheet Vapor Retarder: ASTM E 1745, Class A. Include manufacturer's recommended adhesive or pressure-sensitive tape.

1. Basis of Design Product: Subject to compliance with requirements, provide Reef Industries; Griffolyn Vaporguard, or comparable product by one of the following:

a. Fortifiber Building Systems Group.
b. GCP Applied Technologies Inc. (formerly Grace Construction Products).
c. Raven Industries, Inc.
d. Stego Industries, LLC.
e. W. R. Meadows, Inc.

2.8 CURING MATERIALS FOR INTERIOR CONCRETE

A. General: Use curing materials that will not stain or affect concrete finish or lessen concrete strength or interfere with application of finish flooring.

B. Slabs to Receive Moisture-Sensitive Floor Finishes: Do not use curing compounds in areas where moisture-sensitive floor finishes are scheduled. Slabs in these areas shall be cured by water ponding or sheet curing.

1. Water Ponding: Cover slabs with water 20 deg F less than temperature of concrete. Maintain concrete temperature above 55 deg F.
2. Sheet Curing Materials: White opaque plastic sheets, waterproof paper or white burlap-polyethylene sheets conforming to ASTM C171 for use on structural concrete.
3. Curing Period Time: Not less than 7 days.

C. Curing Compound: Non-residue sodium silicate cure. Shall be applied to areas scheduled to receive concrete toppings, and floor finishes applied with adhesives or special floor coatings. Submit manufacturer’s written guarantee of compatibility with tile, resilient and carpeting adhesives scheduled or anticipated.

1. Products/Manufacturers:

a. "L &M Cure"; L & M Construction Chemicals.
b. "Day-Chem Sil Cure”; Dayton Superior.
c. “EUCOSIL”; Euclid Chemical.
d. “MED-CURE”; W. R. Meadows.

2. Locations: Provide one of these Products for interior slabs that are scheduled to receive floor finishes.

D. Water: Potable, not detrimental to concrete.

E. Curing and Sealing Compound: Water based, minimum 30% solids, acrylic ASTM C1315 Type 1, Class A, clear. Must be applied at no greater than 300 SF per gallon.

1. Products/Manufacturers:

a. "DRESS & SEAL WB30"; L & M Construction Chemicals.
b. “SUPER FLOOR COAT”; Euclid Chemical.
c. “VOCOMP-30"; W. R. Meadows.

2. Locations: Provide one of these Products where sealed concrete is indicated on the Drawings and/or in the Finish Schedule.

2.9 CURING MATERIALS FOR EXTERIOR CONCRETE

A. Exterior Concrete Curing Compound: VOC compliant water-based curing compound meeting ASTM C 309, Type 1, Class B.

1. Products/Manufacturers:

a. "L &M Cure R”; L & M Construction Chemicals.
b. “KUREZ DR VOX”; Euclid Chemical.
c. “Day-Chem-Rez-Cure”; Dayton Superior.
d. “1100-CLEAR”; W.R. Meadows.

2. Locations: All exterior concrete.

B. Anti-Spalling Agent: Silane based products.

1. Materials: Silane with 40 percent minimum solids by weight or silane/siloxane blend.
2. Products/Manufacturers:

a. “CHEM-TRETE 40 VOC”; Protectosil; (908) 637-6727.
b. “BARACADE SILANE 40”; Euclid Chemical.
c. “Hydrozo Silane 40 VOC”; BASF Construction Chemicals, LLC; (800) 243-6739.
d. “Dur A Pell 40 S”; Chemprobe Coating Systems, LP; (800) 760-6776.
e. “AQUAPEL”; L & M Construction Chemicals.

C. Water: Potable, not detrimental to concrete.

2.10 RELATED MATERIALS

A. Expansion- and Isolation-Joint-Filler Strips: ASTM D 1751, asphalt-saturated cellulosic fiber or ASTM D 1752, cork or self-expanding cork.

B. Bonding Agent: ASTM C 1059/C 1059M, Type II, nonredispersible, acrylic emulsion or styrene butadiene.

C. Reglets: Fabricate reglets of not less than 0.022-inch-thick, galvanized-steel sheet. Temporarily fill or cover face opening of reglet to prevent intrusion of concrete or debris.

D. Dovetail Anchor Slots: Hot-dip galvanized-steel sheet, not less than 0.034-inch-thick, with bent tab anchors. Temporarily fill or cover face opening of slots to prevent intrusion of concrete or debris.

2.11 REPAIR MATERIALS

A. Repair Underlayment: Cement-based, polymer-modified, self-leveling product that can be applied in thicknesses from 1/8 inch and that can be feathered at edges to match adjacent floor elevations.

1. Cement Binder: ASTM C 150/C 150M, portland cement or hydraulic or blended hydraulic cement as defined in ASTM C 219.
2. Primer: Product of underlayment manufacturer recommended for substrate, conditions, and application.
3. Aggregate: Well-graded, washed gravel, 1/8 to 1/4 inch or coarse sand as recommended by underlayment manufacturer.
4. Compressive Strength: Not less than 4100 psi at 28 days when tested according to ASTM C 109/C 109M.

B. Repair Overlayment: Cement-based, polymer-modified, self-leveling product that can be applied in thicknesses from 1/4 inch and that can be filled in over a scarified surface to match adjacent floor elevations.

1. Cement Binder: ASTM C 150/C 150M, portland cement or hydraulic or blended hydraulic cement as defined in ASTM C 219.
2. Primer: Product of topping manufacturer recommended for substrate, conditions, and application.
3. Aggregate: Well-graded, washed gravel, 1/8 to 1/4 inch or coarse sand as recommended by topping manufacturer.
4. Compressive Strength: Not less than 5000 psi at 28 days when tested according to ASTM C 109/C 109M.

2.12 CONCRETE MIXTURES, GENERAL

A. Prepare design mixtures for each type and strength of concrete, proportioned on the basis of laboratory trial mixture or field test data, or both, according to ACI 301.

1. Use a qualified independent testing agency for preparing and reporting proposed mixture designs based on laboratory trial mixtures.

B. Cementitious Materials: Limit percentage, by weight, of cementitious materials other than portland cement in concrete as follows:

1. Fly Ash: 25 percent.
2. Combined Fly Ash and Pozzolan: 25 percent.
3. Combined Fly Ash or Pozzolan and Slag Cement: 50 percent portland cement minimum, with fly ash or pozzolan not exceeding 25 percent.

C. Limit water-soluble, chloride-ion content in hardened concrete to 0.15 percent by weight of cement.

D. Admixtures: Use admixtures according to manufacturer's written instructions.

1. Use water-reducing admixture in concrete, as required, for placement and workability.
2. Use water-reducing and -retarding admixture when required by high temperatures, low humidity, or other adverse placement conditions.

3. Use water-reducing admixture in pumped concrete, concrete for heavy-use industrial slabs and parking structure slabs, concrete required to be watertight, and concrete with a w/c ratio below 0.50.
4. Use corrosion-inhibiting admixture in concrete mixtures where indicated.

2.13 CONCRETE MIXTURES FOR BUILDING ELEMENTS

A. Footings and Piers: Normal-weight concrete.

1. Minimum Compressive Strength: As indicated at 28 days.
2. Maximum W/C Ratio: 0.45.
3. Slump Limit: 4 inches, plus or minus 1 inch.
4. Air Content: 6 percent, plus or minus 1.5 percent at point of delivery for 1-inch nominal maximum aggregate size.

B. Slabs-on-Grade: Normal-weight concrete.

1. Minimum Compressive Strength: As indicated at 28 days.
2. Maximum W/C Ratio: 0.45.
3. Slump Limit: 4 inches, plus or minus 1 inch.
4. Air Content: 6 percent, plus or minus 1.5 percent at point of delivery for 3/4-inch nominal maximum aggregate size.
5. Air Content: Do not allow air content of trowel-finished floors to exceed 3 percent.

C. Concrete Toppings: Normal-weight concrete.

1. Minimum Compressive Strength: As indicated at 28 days.
2. Slump Limit: 4 inches, plus or minus 1 inch.
3. Air Content: Do not allow air content of trowel-finished toppings to exceed 3 percent.

D. Foundation Walls: Normal-weight concrete.

1. Minimum Compressive Strength: As indicated at 28 days.
2. Maximum W/C Ratio: 0.45.
3. Slump Limit: 4 inches, plus or minus 1 inch.
4. Air Content: 6 percent, plus or minus 1.5 percent at point of delivery for 1-inch nominal maximum aggregate size.

PART 3 - EXECUTION

3.1 FORMWORK INSTALLATION

A. Design, erect, shore, brace, and maintain formwork, according to ACI 301, to support vertical, lateral, static, and dynamic loads, and construction loads that might be applied, until structure can support such loads.

B. Construct formwork so concrete members and structures are of size, shape, alignment, elevation, and position indicated, within tolerance limits of ACI 117.

C. Limit concrete surface irregularities, designated by ACI 347 as abrupt or gradual, as follows:

1. Class B, 1/4 inch for rough-formed finished surfaces.

D. Construct forms tight enough to prevent loss of concrete mortar.

E. Construct forms for easy removal without hammering or prying against concrete surfaces. Provide crush or wrecking plates where stripping may damage cast-concrete surfaces. Provide top forms for inclined surfaces steeper than 1.5 horizontal to 1 vertical.

1. Install keyways, reglets, recesses, and the like, for easy removal.
2. Do not use rust-stained steel form-facing material.

F. Set edge forms, bulkheads, and intermediate screed strips for slabs to achieve required elevations and slopes in finished concrete surfaces. Provide and secure units to support screed strips; use strike-off templates or compacting-type screeds.

G. Provide temporary openings for cleanouts and inspection ports where interior area of formwork is inaccessible. Close openings with panels tightly fitted to forms and securely braced to prevent loss of concrete mortar. Locate temporary openings in forms at inconspicuous locations.

H. Chamfer exterior corners and edges of permanently exposed concrete.

I. Form openings, chases, offsets, sinkages, keyways, reglets, blocking, screeds, and bulkheads required in the Work. Determine sizes and locations from trades providing such items.

J. Clean forms and adjacent surfaces to receive concrete. Remove chips, wood, sawdust, dirt, and other debris just before placing concrete.

K. Retighten forms and bracing before placing concrete, as required, to prevent mortar leaks and maintain proper alignment.

L. Coat contact surfaces of forms with form-release agent, according to manufacturer's written instructions, before placing reinforcement.

3.2 EMBEDDED ITEM INSTALLATION

A. Place and secure anchorage devices and other embedded items required for adjoining work that is attached to or supported by cast-in-place concrete. Use setting drawings, templates, diagrams, instructions, and directions furnished with items to be embedded.

1. Install anchor rods, accurately located, to elevations required and complying with tolerances in Section 7.5 of AISC 303.
2. Install reglets to receive waterproofing and to receive through-wall flashings in outer face of concrete frame at exterior walls, where flashing is shown at lintels, shelf angles, and other conditions.
3. Install dovetail anchor slots in concrete structures as indicated.

3.3 REMOVING AND REUSING FORMS

A. General: Formwork for sides of beams, walls, columns, and similar parts of the Work that does not support weight of concrete may be removed after cumulatively curing at not less than 50 deg F for 24 hours after placing concrete. Concrete has to be hard enough to not be damaged by form-removal operations, and curing and protection operations need to be maintained.

1. Leave formwork for beam soffits, joists, slabs, and other structural elements that support weight of concrete in place until concrete has achieved at least 70 percent of its 28-day design compressive strength.
2. Remove forms only if shores have been arranged to permit removal of forms without loosening or disturbing shores.

B. Clean and repair surfaces of forms to be reused in the Work. Split, frayed, delaminated, or otherwise damaged form-facing material are not acceptable for exposed surfaces. Apply new form-release agent.

C. When forms are reused, clean surfaces, remove fins and laitance, and tighten to close joints. Align and secure joints to avoid offsets. Do not use patched forms for exposed concrete surfaces unless approved by Architect.

3.4 SHORING AND RESHORING INSTALLATION

A. Comply with ACI 318 and ACI 301 for design, installation, and removal of shoring and reshoring.

1. Do not remove shoring or reshoring until measurement of slab tolerances is complete.

B. In multistory construction, extend shoring or reshoring over a sufficient number of stories to distribute loads in such a manner that no floor or member will be excessively loaded or will induce tensile stress in concrete members without sufficient steel reinforcement.

C. Plan sequence of removal of shores and reshore to avoid damage to concrete. Locate and provide adequate reshoring to support construction without excessive stress or deflection.

3.5 VAPOR-RETARDER INSTALLATION

A. Sheet Vapor Retarders: Place, protect, and repair sheet vapor retarder according to ASTM E 1643 and manufacturer's written instructions.

1. Lap joints 6 inches and seal with manufacturer's recommended tape.

B. Bituminous Vapor Retarders: Place, protect, and repair bituminous vapor retarder according to manufacturer's written instructions.

3.6 STEEL REINFORCEMENT INSTALLATION

A. General: Comply with CRSI's "Manual of Standard Practice" for fabricating, placing, and supporting reinforcement.

1. Do not cut or puncture vapor retarder. Repair damage and reseal vapor retarder before placing concrete.

B. Clean reinforcement of loose rust and mill scale, earth, ice, and other foreign materials that reduce bond to concrete.

C. Accurately position, support, and secure reinforcement against displacement. Locate and support reinforcement with bar supports to maintain minimum concrete cover. Do not tack weld crossing reinforcing bars.

1. Weld reinforcing bars according to AWS D1.4/D 1.4M, where indicated.

D. Set wire ties with ends directed into concrete, not toward exposed concrete surfaces.

E. Install welded-wire reinforcement in longest practicable lengths on bar supports spaced to minimize sagging. Lap edges and ends of adjoining sheets at least one mesh spacing. Offset laps of adjoining sheet widths to prevent continuous laps in either direction. Lace overlaps with wire.

3.7 JOINTS

A. General: Construct joints true to line with faces perpendicular to surface plane of concrete.

B. Construction Joints: Install so strength and appearance of concrete are not impaired, at locations indicated or as approved by Architect.

1. Place joints perpendicular to main reinforcement. Continue reinforcement across construction joints unless otherwise indicated. Do not continue reinforcement through sides of strip placements of floors and slabs.
2. Form keyed joints as indicated. Embed keys at least 1-1/2 inches into concrete.

C. Contraction Joints in Slabs-on-Grade: Form weakened-plane contraction joints, sectioning concrete into areas as indicated. Construct contraction joints for a depth equal to at least one-fourth of concrete thickness as follows:

1. Grooved Joints: Form contraction joints after initial floating by grooving and finishing each edge of joint to a radius of 1/8 inch. Repeat grooving of contraction joints after applying surface finishes. Eliminate groover tool marks on concrete surfaces.
2. Sawed Joints: Form contraction joints with power saws equipped with shatterproof abrasive or diamond-rimmed blades. Cut 1/8-inch-wide joints into concrete when cutting action does not tear, abrade, or otherwise damage surface and before concrete develops random contraction cracks.

D. Isolation Joints in Slabs-on-Grade: After removing formwork, install joint-filler strips at slab junctions with vertical surfaces, such as column pedestals, foundation walls, grade beams, and other locations, as indicated.

1. Extend joint-filler strips full width and depth of joint, terminating flush with finished concrete surface unless otherwise indicated.
2. Terminate full-width joint-filler strips not less than 1/2 inch or more than 1 inch below finished concrete surface where joint sealants, specified in Section 079200 "Joint Sealants," are indicated.
3. Install joint-filler strips in lengths as long as practicable. Where more than one length is required, lace or clip sections together.

3.8 WATERSTOP INSTALLATION

A. Self-Expanding Strip Waterstops: Install in construction joints and at other locations indicated, according to manufacturer's written instructions, adhesive bonding, mechanically fastening, and firmly pressing into place. Install in longest lengths practicable.

3.9 CONCRETE PLACEMENT

A. Before placing concrete, verify that installation of formwork, reinforcement, and embedded items is complete and that required inspections are completed.

B. Before test sampling and placing concrete, water may be added at Project site, subject to limitations of ACI 301.

1. Do not add water to concrete after adding high-range water-reducing admixtures to mixture.

C. Deposit concrete continuously in one layer or in horizontal layers of such thickness that no new concrete is placed on concrete that has hardened enough to cause seams or planes of weakness. If a section cannot be placed continuously, provide construction joints as indicated. Deposit concrete to avoid segregation.

1. Deposit concrete in horizontal layers of depth not to exceed formwork design pressures and in a manner to avoid inclined construction joints.
2. Consolidate placed concrete with mechanical vibrating equipment according to ACI 301.
3. Do not use vibrators to transport concrete inside forms. Insert and withdraw vibrators vertically at uniformly spaced locations to rapidly penetrate placed layer and at least 6 inches into preceding layer. Do not insert vibrators into lower layers of concrete that have begun to lose plasticity. At each insertion, limit duration of vibration to time necessary to consolidate concrete and complete embedment of reinforcement and other embedded items without causing mixture constituents to segregate.

D. Deposit and consolidate concrete for floors and slabs in a continuous operation, within limits of construction joints, until placement of a panel or section is complete.

1. Consolidate concrete during placement operations, so concrete is thoroughly worked around reinforcement and other embedded items and into corners.
2. Maintain reinforcement in position on chairs during concrete placement.
3. Screed slab surfaces with a straightedge and strike off to correct elevations.
4. Slope surfaces uniformly to drains where required.
5. Begin initial floating using bull floats or darbies to form a uniform and open-textured surface plane, before excess bleedwater appears on the surface. Do not further disturb slab surfaces before starting finishing operations.

3.10 FINISHING FORMED SURFACES

A. Rough-Formed Finish: As-cast concrete texture imparted by form-facing material with tie holes and defects repaired and patched. Remove fins and other projections that exceed specified limits on formed-surface irregularities.

1. Apply to concrete surfaces not exposed to public view.

B. Smooth-Formed Finish: As-cast concrete texture imparted by form-facing material, arranged in an orderly and symmetrical manner with a minimum of seams. Repair and patch tie holes and defects. Remove fins and other projections that exceed specified limits on formed-surface irregularities.

1. Apply to concrete surfaces exposed to public view.

C. Rubbed Finish: Apply the following to smooth-formed-finished as-cast concrete where indicated:

1. Smooth-Rubbed Finish: Not later than one day after form removal, moisten concrete surfaces and rub with carborundum brick or another abrasive until producing a uniform color and texture. Do not apply cement grout other than that created by the rubbing process.
2. Grout-Cleaned Finish: Wet concrete surfaces and apply grout of a consistency of thick paint to coat surfaces and fill small holes. Mix 1-part portland cement to 1-1/2 parts fine sand with a 1:1 mixture of bonding admixture and water. Add white portland cement in amounts determined by trial patches, so color of dry grout matches adjacent surfaces. Scrub grout into voids and remove excess grout. When grout whitens, rub surface with clean burlap and keep surface damp by fog spray for at least 36 hours.
3. Cork-Floated Finish: Wet concrete surfaces and apply a stiff grout. Mix 1-part portland cement and 1-part fine sand with a 1:1 mixture of bonding agent and water. Add white portland cement in amounts determined by trial patches, so color of dry grout matches adjacent surfaces. Compress grout into voids by grinding surface. In a swirling motion, finish surface with a cork float.

D. Related Unformed Surfaces: At tops of walls, horizontal offsets, and similar unformed surfaces adjacent to formed surfaces, strike off smooth and finish with a texture matching adjacent formed surfaces. Continue final surface treatment of formed surfaces uniformly across adjacent unformed surfaces unless otherwise indicated.

3.11 FINISHING FLOORS AND SLABS

A. General: Comply with ACI 302.1R recommendations for screeding, restraightening, and finishing operations for concrete surfaces. Do not wet concrete surfaces.

B. Scratch Finish: While still plastic, texture concrete surface that has been screeded and bull-floated or darbied. Use stiff brushes, brooms, or rakes to produce a profile amplitude of 1/4 inch in one direction.

1. Apply scratch finish to surfaces to receive mortar setting beds for bonded cementitious floor finishes.

C. Float Finish: Consolidate surface with power-driven floats or by hand floating if area is small or inaccessible to power-driven floats. Restraighten, cut down high spots, and fill low spots. Repeat float passes and restraightening until surface is left with a uniform, smooth, granular texture.

1. Apply float finish to surfaces to receive trowel finish and to be covered with fluid-applied or sheet waterproofing, built-up or membrane roofing, or sand-bed terrazzo.

D. Trowel Finish: After applying float finish, apply first troweling and consolidate concrete by hand or power-driven trowel. Continue troweling passes and restraighten until surface is free of trowel marks and uniform in texture and appearance. Grind smooth any surface defects that would telegraph through applied coatings or floor coverings.

1. Apply a trowel finish to surfaces exposed to view or to be covered with resilient flooring, carpet, ceramic or quarry tile set over a cleavage membrane, paint, or another thin-film-finish coating system.
2. Finish surfaces to the following tolerances, according to ASTM E 1155, for a randomly trafficked floor surface:

a. Specified overall values of flatness, F(F) 25; and of levelness, F(L) 20; with minimum local values of flatness, F(F) 17; and of levelness, F(L) 15; for carpeted slabs.
b. Specified overall values of flatness, F(F) 35; and of levelness, F(L) 25; with minimum local values of flatness, F(F) 24; and of levelness, F(L) 17; for slabs-on-grade.
c. Specified overall values of flatness, F(F) 30; and of levelness, F(L) 20; with minimum local values of flatness, F(F) 24; and of levelness, F(L) 15; for suspended slabs.
d. Specified overall values of flatness, F(F) 45; and of levelness, F(L) 35; with minimum local values of flatness, F(F) 30; and of levelness, F(L) 24; for high-speed forklifts, or air pallets.

E. Trowel and Fine-Broom Finish: Apply a first trowel finish to surfaces indicated. While concrete is still plastic, slightly scarify surface with a fine broom.

1. Comply with flatness and levelness tolerances for trowel-finished floor surfaces.

F. Broom Finish: Apply a broom finish to exterior concrete platforms, steps, ramps, and elsewhere as indicated.

1. Immediately after float finishing, slightly roughen trafficked surface by brooming with fiber-bristle broom perpendicular to main traffic route. Coordinate required final finish with Architect before application.

3.12 MISCELLANEOUS CONCRETE ITEM INSTALLATION

A. Filling In: Fill in holes and openings left in concrete structures after work of other trades is in place unless otherwise indicated. Mix, place, and cure concrete, as specified, to blend with in-place construction. Provide other miscellaneous concrete filling indicated or required to complete the Work.

B. Curbs: Provide monolithic finish to interior curbs by stripping forms while concrete is still green and by steel-troweling surfaces to a hard, dense finish with corners, intersections, and terminations slightly rounded.

C. Equipment Bases and Foundations:

1. Coordinate sizes and locations of concrete bases with actual equipment provided.
2. Construct concrete bases to thickness indicated, and extend base not less than 6 inches in each direction beyond the maximum dimensions of supported equipment unless otherwise indicated or unless required for seismic anchor support.
3. Minimum Compressive Strength: 3000 psi at 28 days.
4. Install dowel rods to connect concrete base to concrete floor. Unless otherwise indicated, install dowel rods on 18-inch centers around the full perimeter of concrete base.
5. For supported equipment, install epoxy-coated anchor bolts that extend through concrete base and anchor into structural concrete substrate.
6. Prior to pouring concrete, place and secure anchorage devices. Use setting drawings, templates, diagrams, instructions, and directions furnished with items to be embedded.
7. Cast anchor-bolt insert into bases. Install anchor bolts to elevations required for proper attachment to supported equipment.

D. Steel Pan Stairs: Provide concrete fill for steel pan stair treads, landings, and associated items. Cast-in inserts and accessories as shown on Drawings. Screed, tamp, and trowel finish concrete surfaces.

E. Provide recesses in concrete to receive floor mats and frames. Coordinate sizes and locations with details on Drawings.

3.13 CONCRETE PROTECTING AND CURING

A. General: Protect freshly placed concrete from premature drying and excessive cold or hot temperatures. Comply with ACI 306.1 for cold-weather protection and ACI 305.1 for hot-weather protection during curing.

B. Evaporation Retarder: Apply evaporation retarder to unformed concrete surfaces if hot, dry, or windy conditions cause moisture loss approaching 0.2 lb/sq. ft. x h before and during finishing operations. Apply according to manufacturer's written instructions after placing, screeding, and bull floating or darbying concrete, but before float finishing.

C. Formed Surfaces: Cure formed concrete surfaces, including underside of beams, supported slabs, and other similar surfaces. If forms remain during curing period, moist cure after loosening forms. If removing forms before end of curing period, continue curing for remainder of curing period.

D. Unformed Surfaces: Begin curing immediately after finishing concrete. Cure unformed surfaces, including floors and slabs, concrete floor toppings, and other surfaces.

E. Cure concrete according to ACI 308.1, by one or a combination of the following methods:

1. Moisture Curing: Keep surfaces continuously moist for not less than seven days with the following materials:

    a. Water.
    b. Continuous water-fog spray.
    c. Absorptive cover, water saturated, and kept continuously wet. Cover concrete surfaces and edges with 12-inch lap over adjacent absorptive covers.

2. Moisture-Retaining-Cover Curing: Cover concrete surfaces with moisture-retaining cover for curing concrete, placed in widest practicable width, with sides and ends lapped at least 12 inches, and sealed by waterproof tape or adhesive. Cure for not less than seven days. Immediately repair any holes or tears during curing period, using cover material and waterproof tape.

    a. Moisture cure or use moisture-retaining covers to cure concrete surfaces to receive floor coverings.
    b. Moisture cure or use moisture-retaining covers to cure concrete surfaces to receive penetrating liquid floor treatments.
    c. Cure concrete surfaces to receive floor coverings with either a moisture-retaining cover or a curing compound that the manufacturer certifies does not interfere with bonding of floor covering used on Project.

3. Curing Compound: Apply uniformly in continuous operation by power spray or roller according to manufacturer's written instructions. Recoat areas subjected to heavy rainfall within three hours after initial application. Maintain continuity of coating and repair damage during curing period.

a. Removal: After curing period has elapsed, remove curing compound without damaging concrete surfaces by method recommended by curing compound manufacturer.

4. Curing and Sealing Compound: Apply uniformly to floors and slabs indicated in a continuous operation by power spray or roller according to manufacturer's written instructions. Recoat areas subjected to heavy rainfall within three hours after initial application. Repeat process 24 hours later and apply a second coat. Maintain continuity of coating and repair damage during curing period.

F. Slabs to Receive Moisture-Sensitive Floor Finishes: (At luxury vinyl tile floors)

1. Water Ponding: Block drains, dam or barricade around slab to create ponding, cover area with water and secure against leakage. Replace water loss to leaks, evaporation or other causes as required to maintain constant coverage for 7 days.
2. Sheet Curing: Cover slabs with waterproof paper or plastic overlapping minimum of 4 inches and sealing seams with waterproof tape. Weigh down, stake of otherwise edges to prevent wind from lifting sheet covering and exposure of slab.

3.14 JOINT FILLING

A. Prepare, clean, and install joint filler according to manufacturer's written instructions.

1. Defer joint filling until concrete has aged at least six month(s). Do not fill joints until construction traffic has permanently ceased.

B. Remove dirt, debris, saw cuttings, curing compounds, and sealers from joints; leave contact faces of joints clean and dry.

C. Install semirigid joint filler full depth in saw-cut joints and at least 2 inches deep in formed joints. Overfill joint and trim joint filler flush with top of joint after hardening.

3.15 CONCRETE SURFACE REPAIRS

A. Defective Concrete: Repair and patch defective areas when approved by Architect. Remove and replace concrete that cannot be repaired and patched to Architect's approval.

B. Patching Mortar: Mix dry-pack patching mortar, consisting of 1-part portland cement to 2-1/2 parts fine aggregate passing a No. 16 sieve, using only enough water for handling and placing.

C. Repairing Formed Surfaces: Surface defects include color and texture irregularities, cracks, spalls, air bubbles, honeycombs, rock pockets, fins and other projections on the surface, and stains and other discolorations that cannot be removed by cleaning.

1. Immediately after form removal, cut out honeycombs, rock pockets, and voids more than 1/2 inch in any dimension to solid concrete. Limit cut depth to 3/4 inch. Make edges of cuts perpendicular to concrete surface. Clean, dampen with water, and brush-coat holes and voids with bonding agent. Fill and compact with patching mortar before bonding agent has dried. Fill form-tie voids with patching mortar or cone plugs secured in place with bonding agent.
2. Repair defects on surfaces exposed to view by blending white portland cement and standard portland cement so that, when dry, patching mortar matches surrounding color. Patch a test area at inconspicuous locations to verify mixture and color match before

proceeding with patching. Compact mortar in place and strike off slightly higher than surrounding surface.

3. Repair defects on concealed formed surfaces that affect concrete's durability and structural performance as determined by Architect.

D. Repairing Unformed Surfaces: Test unformed surfaces, such as floors and slabs, for finish and verify surface tolerances specified for each surface. Correct low and high areas. Test surfaces sloped to drain for trueness of slope and smoothness; use a sloped template.

1. Repair finished surfaces containing defects. Surface defects include spalls, popouts, honeycombs, rock pockets, crazing and cracks in excess of 0.01-inch-wide or that penetrate to reinforcement or completely through unreinforced sections regardless of width, and other objectionable conditions.
2. After concrete has cured at least 14 days, correct high areas by grinding.
3. Correct localized low areas during or immediately after completing surface finishing operations by cutting out low areas and replacing with patching mortar. Finish repaired areas to blend into adjacent concrete.
4. Correct other low areas scheduled to receive floor coverings with a repair underlayment. Prepare, mix, and apply repair underlayment and primer according to manufacturer's written instructions to produce a smooth, uniform, plane, and level surface. Feather edges to match adjacent floor elevations.
5. Repair defective areas, except random cracks and single holes 1 inch or less in diameter, by cutting out and replacing with fresh concrete. Remove defective areas with clean, square cuts and expose steel reinforcement with at least a 3/4-inch clearance all around. Dampen concrete surfaces in contact with patching concrete and apply bonding agent. Mix patching concrete of same materials and mixture as original concrete, except without coarse aggregate. Place, compact, and finish to blend with adjacent finished concrete. Cure in same manner as adjacent concrete.
6. Repair random cracks and single holes 1 inch or less in diameter with patching mortar. Groove top of cracks and cut out holes to sound concrete and clean off dust, dirt, and loose particles. Dampen cleaned concrete surfaces and apply bonding agent. Place patching mortar before bonding agent has dried. Compact patching mortar and finish to match adjacent concrete. Keep patched area continuously moist for at least 72 hours.

E. Perform structural repairs of concrete, subject to Architect's approval, using epoxy adhesive and patching mortar.

F. Repair materials and installation not specified above may be used, subject to Architect's approval.

3.16 FIELD QUALITY CONTROL

A. Special Inspections: Owner will engage a qualified testing and inspecting agency to perform field tests and inspections and prepare test reports.

B. Inspections:

1. Steel reinforcement placement.
2. Steel reinforcement welding.
3. Headed bolts and studs.
4. Verification of use of required design mixture.
5. Concrete placement, including conveying and depositing.
6. Curing procedures and maintenance of curing temperature.

7. Verification of concrete strength before removal of shores and forms from beams and slabs.

C. Concrete Tests: Testing of composite samples of fresh concrete obtained according to ASTM C 172/C 172M shall be performed according to the following requirements:

1. Testing Frequency: Obtain at least one composite sample for each 100 cu. yd. or fraction thereof of each concrete mixture placed each day.

   a. When frequency of testing provides fewer than five compressive-strength tests for each concrete mixture, testing shall be conducted from at least five randomly selected batches or from each batch if fewer than five are used.

2. Slump: ASTM C 143/C 143M; one test at point of placement for each composite sample, but not less than one test for each day's pour of each concrete mixture. Perform additional tests when concrete consistency appears to change.
3. Air Content: ASTM C 231/C 231M, pressure method, for normal-weight concrete; one test for each composite sample, but not less than one test for each day's pour of each concrete mixture.
4. Concrete Temperature: ASTM C 1064/C 1064M; one test hourly when air temperature is 40 deg F and below or 80 deg F and above, and one test for each composite sample.
5. Unit Weight: ASTM C 567/C 567M, fresh unit weight of structural lightweight concrete; one test for each composite sample, but not less than one test for each day's pour of each concrete mixture.
6. Compression Test Specimens: ASTM C 31/C 31M.

   a. Cast and laboratory cure two sets of two standard cylinder specimens for each composite sample.

7. Compressive-Strength Tests: ASTM C 39/C 39M; test one set of two laboratory-cured specimens at 7 days and one set of two specimens at 28 days.

   a. Test one set of two field-cured specimens at 7 days and one set of two specimens at 28 days.
   b. A compressive-strength test shall be the average compressive strength from a set of two specimens obtained from same composite sample and tested at age indicated.

8. When strength of field-cured cylinders is less than 85 percent of companion laboratory-cured cylinders, Contractor shall evaluate operations and provide corrective procedures for protecting and curing in-place concrete.
9. Strength of each concrete mixture will be satisfactory if every average of any three consecutive compressive-strength tests equals or exceeds specified compressive strength and no compressive-strength test value falls below specified compressive strength by more than 500 psi.
10. Test results shall be reported in writing to Architect, concrete manufacturer, and Contractor within 48 hours of testing. Reports of compressive-strength tests shall contain Project identification name and number, date of concrete placement, name of concrete testing and inspecting agency, location of concrete batch in Work, design compressive strength at 28 days, concrete mixture proportions and materials, compressive breaking strength, and type of break for both 7- and 28-day tests.
11. Nondestructive Testing: Impact hammer, sonoscope, or other nondestructive device may be permitted by Architect but will not be used as sole basis for approval or rejection of concrete.
12. Additional Tests: Testing and inspecting agency shall make additional tests of concrete when test results indicate that slump, air entrainment, compressive strengths, or other

requirements have not been met, as directed by Architect. Testing and inspecting agency may conduct tests to determine adequacy of concrete by cored cylinders complying with ASTM C 42/C 42M or by other methods as directed by Architect.

13. Additional testing and inspecting, at Contractor's expense, will be performed to determine compliance of replaced or additional work with specified requirements.
14. Correct deficiencies in the Work that test reports and inspections indicate do not comply with the Contract Documents.
15. Refer to Structural Drawings for additional special inspections.

END OF SECTION

SECTION 033600

CONCRETE FLOOR SEALER

PART 1 - GENERAL

1.1 RELATED DOCUMENTS

A. Drawings and general provisions of the Contract, including General and Supplementary Conditions and Division 01 Specification Sections, apply to this Section.

1.2 SUMMARY

A. Section Includes:

1. Penetrating liquid floor treatment for horizontal concrete surfaces.

1.3 PREINSTALLATION MEETINGS

A. Preinstallation Conference: Conduct conference at Project site.

1.4 ACTION SUBMITTALS

A. Product Data: For each type of product.

B. Manufacturer's Installation Instructions.

1.5 QUALITY ASSURANCE

A. Qualification Data: For Installer and manufacturer.

1.6 DELIVERY, STORAGE, AND HANDLING

A. Deliver materials in original packages and containers, with seals unbroken, bearing manufacturer's labels indicating brand name and directions for storage, mixing with other components, and application.

B. Store materials to comply with manufacturer's written instructions to prevent deterioration from moisture or other detrimental effects.

1.7 FIELD CONDITIONS

A. Environmental Limitations: Comply with manufacturer's written instructions for substrate temperature and moisture content, ambient temperature and humidity, ventilation, and other conditions affecting penetrating liquid floor treatment for concrete performance.

1. Do not install penetrating liquid floor treatment for horizontal concrete surfaces when air temperature or concrete surface temperature is less than 40 degrees F.
2. Maintain concrete floor surface temperature above freezing during and after installation of concrete liquid floor treatment until liquid floor treatment is cured.

B. Close areas to traffic during penetrating liquid floor treatment application and, after application, for time period recommended in writing by liquid floor treatment manufacturer.

PART 2 - PRODUCTS

2.1 LIQUID FLOOR TREATMENTS

A. Penetrating Liquid Floor Treatment: Clear, chemically reactive, waterborne solution of inorganic silicate or siliconate materials and proprietary components; odorless; that penetrates, hardens, and densifies concrete surfaces.

1. Basis of Design Product: Subject to compliance with requirements, provide L&M Construction Chemicals; Dress and Seal WB30, or comparable product by one of the following:

a. Bone Dry Products.
b. Curecrete Distribution Inc.
c. Euclid Chemical Company (The); an RPM company.
d. PROSOCO, Inc; Consolideck LS.
e. Vexcon Chemicals Inc.
f. W. R. Meadows, Inc.

PART 3 - EXECUTION

3.1 EXAMINATION

A. Examine the following for uncured concrete surfaces:

1. Verify final troweling is complete of uncured concrete.
2. Verify uncured concrete is set sufficiently so application of liquid floor treatment will not mar concrete surface.

B. Examine the following for cured concrete surfaces:

1. Verify concrete floor surfaces are free of substances that may impair penetration of concrete liquid floor treatment.

3.2 PREPARATION

A. Remove membrane forming curing compounds and other surface contaminates capable of impairing concrete liquid floor treatment penetration into concrete.

B. Remove curing compounds, sealers, oil, dirt, laitance, and other contaminants and complete surface repairs.

C. Allow floor to dry. Broom clean floor surface to remove loose dust and dirt.

3.3 LIQUID FLOOR TREATMENT APPLICATION

A. Penetrating Liquid Floor Treatment for Uncured and Cured Horizontal Concrete Surfaces:

1. Prepare, apply, and finish penetrating liquid floor treatment according to manufacturer's written instructions.

3.4 PROTECTION OF LIQUID FLOOR TREATMENTS

A. Protect liquid floor treatment from damage and wear during the remainder of construction period. Use protective methods and materials, including temporary covering, recommended in writing by liquid floor treatments installer.

END OF SECTION

SECTION 034500

PRECAST ARCHITECTURAL CONCRETE

PART 1 - GENERAL

1.1 RELATED DOCUMENTS

A. Drawings and general provisions of the Contract, including General and Supplementary Conditions and Division 01 Specification Sections, apply to this Section.

1.2 SUMMARY

A. Section Includes:

1. Architectural precast concrete window lintels/sills, continuous water table, and date stone.

1.3 DEFINITIONS

A. Design Reference Sample: Sample of approved architectural precast concrete color, finish and texture, preapproved by Architect.

1.4 PREINSTALLATION MEETINGS

A. Preinstallation Conference: Conduct conference at Project site.

1.5 ACTION SUBMITTALS

A. Product Data: For each type of product.

B. Design Mixtures: For each precast concrete mixture. Include compressive strength and water-absorption tests.

C. Shop Drawings:

1. Detail fabrication and installation of architectural precast concrete units.
2. Indicate locations, plans, elevations, dimensions, shapes, and cross sections of each unit.
3. Indicate joints, reveals, drips, chamfers, and extent and location of each surface finish.
4. Indicate details at building corners.

D. Samples: Design reference samples for initial verification of design intent, for each type of finish indicated on exposed surfaces of architectural precast concrete units, in sets of three, representative of finish, color, and texture variations expected; approximately 12 by 12 by 2 inches.

1. When other faces of precast concrete unit are exposed, include Samples illustrating workmanship, color, and texture of backup concrete as well as facing concrete.

    a. Grout Samples for Initial Selection: Color charts consisting of actual sections of grout showing manufacturer's full range of colors.
    b. Grout Samples for Verification: Showing color and texture of joint treatment.

E. Delegated-Design Submittal: For architectural precast concrete indicated to comply with performance requirements and design criteria, including analysis data signed and sealed by the qualified professional engineer responsible for their preparation.

1. Show governing panel types, connections, types of reinforcement, including special reinforcement, and concrete cover on reinforcement. Indicate location, type, magnitude, and direction of loads imposed on the building structural frame from architectural precast concrete.

1.6 INFORMATIONAL SUBMITTALS

A. Qualification Data: For fabricator.

B. Welding certificates.

C. Material Certificates: For the following items:

1. Cementitious materials.
2. Admixtures.
3. Stone anchors.

D. Material Test Reports: For aggregates.

E. Source quality-control test reports.

F. Field quality-control reports.

1.7 QUALITY ASSURANCE

A. Fabricator Qualifications: A firm that assumes responsibility for engineering architectural precast concrete units to comply with performance requirements. This responsibility includes preparation of Shop Drawings and comprehensive engineering analysis by a qualified professional engineer.

1. Designated as a PCI-certified plant for Group A, Category A1 - Architectural Cladding and Load Bearing Units or designated as an APA-certified plant for production of architectural precast concrete products.

B. Testing Agency Qualifications: An independent testing agency, acceptable to authorities having jurisdiction, qualified according to ASTM C 1077 and ASTM E 329 for testing indicated.

C. Quality-Control Standard: For manufacturing procedures and testing requirements, quality-control recommendations, and dimensional tolerances for types of units required, comply with PCI MNL 117, "Manual for Quality Control for Plants and Production of Architectural Precast Concrete Products."

D. Welding Qualifications: Qualify procedures and personnel according to AWS D1.1/D.1.1M, "Structural Welding Code - Steel"; and AWS D1.4/D1.4M, "Structural Welding Code - Reinforcing Steel."

E. Sample Panels: After sample approval and before fabricating architectural precast concrete units, produce a minimum of two sample panels approximately 16 sq. ft. in area for review by Architect. Incorporate full-scale details of architectural features, finishes, textures, and transitions in sample panels.

1. Locate panels where indicated or, if not indicated, as directed by Architect.
2. Damage part of an exposed-face surface for each finish, color, and texture, and demonstrate adequacy of repair techniques proposed for repair of surface blemishes.
3. After acceptance of repair technique, maintain one sample panel at manufacturer's plant and one at Project site in an undisturbed condition as a standard for judging the completed Work.
4. Demolish and remove sample panels when directed.

1.8 COORDINATION

A. Furnish loose connection hardware and anchorage items to be embedded in or attached to other construction without delaying the Work. Provide locations, setting diagrams, templates, instructions, and directions, as required, for installation.

1.9 DELIVERY, STORAGE, AND HANDLING

A. Deliver architectural precast concrete units in such quantities and at such times to limit unloading units temporarily on the ground or other rehandling.

B. Support units during shipment on nonstaining shock-absorbing material.

C. Store units with adequate dunnage and bracing and protect units to prevent contact with soil, to prevent staining, and to prevent cracking, distortion, warping or other physical damage.

D. Place stored units so identification marks are clearly visible, and units can be inspected.

E. Handle and transport units in a manner that avoids excessive stresses that cause cracking or damage.

F. Lift and support units only at designated points indicated on Shop Drawings.

PART 2 - PRODUCTS

2.1 MANUFACTURERS

A. Manufacturers: Subject to compliance with requirements, available manufacturers offering products that may be incorporated into the Work include, but is not limited to, the following:

1. Architectural Cast Stone.
2. Continental Cast Stone.
3. Appalachian Stone.

2.2 PERFORMANCE REQUIREMENTS

A. Design Standards: Comply with ACI 318 and design recommendations of PCI MNL 120, "PCI Design Handbook - Precast and Prestressed Concrete," applicable to types of architectural precast concrete units indicated.

B. Structural Performance: Provide architectural precast concrete units and connections capable of withstanding actual loads such as wind, suction, deflection, thermal movement, and structural member deflection.

2.3 MOLD MATERIALS

A. Molds: Rigid, dimensionally stable, non-absorptive material, warp and buckle free, that provides continuous and true precast concrete surfaces within fabrication tolerances indicated; nonreactive with concrete and suitable for producing required finishes.

1. Mold-Release Agent: Commercially produced form-release agent that does not bond with, stain or adversely affect precast concrete surfaces and does not impair subsequent surface or joint treatments of precast concrete.

2.4 REINFORCING MATERIALS

A. Reinforcing Bars: ASTM A 615/A 615M, Grade 60, deformed.

B. Low-Alloy-Steel Reinforcing Bars: ASTM A 706/A 706M, deformed.

C. Plain-Steel Welded Wire Reinforcement: ASTM A 185/A 185M, fabricated fromgalvanized-steel wire into flat sheets.

D. Deformed-Steel Welded Wire Reinforcement: ASTM A 497/A 497M, flat sheet.

E. Supports: Suspend reinforcement from back of mold or use bolsters, chairs, spacers, and other devices for spacing, supporting, and fastening reinforcing bars and welded wire reinforcement in place according to PCI MNL 117.

2.5 CONCRETE MATERIALS

A. Portland Cement: ASTM C 150/C 150M, Type I or Type III, gray, unless otherwise indicated.

1. For surfaces exposed to view in finished structure, use gray or white cement, of same type, brand, and mill source.

B. Supplementary Cementitious Materials:

1. Fly Ash: ASTM C 618, Class C or F, with maximum loss on ignition of 3 percent.
2. Metakaolin: ASTM C 618, Class N.
3. Silica Fume: ASTM C 1240, with optional chemical and physical requirement.
4. Ground Granulated Blast-Furnace Slag: ASTM C 989, Grade 100 or 120.

C. Normal-Weight Aggregates: Except as modified by PCI MNL 117, ASTM C 33/C 33M, with coarse aggregates complying with Class 5S. Stockpile fine and coarse aggregates for each type of exposed finish from a single source (pit or quarry) for Project.

1. Face-Mixture-Coarse Aggregates: Selected, hard, and durable; free of material that reacts with cement or causes staining; to match selected finish sample.

   a. Gradation: To match design reference sample.

2. Face-Mixture-Fine Aggregates: Selected, natural or manufactured sand compatible with coarse aggregate; to match approved finish sample.

D. Coloring Admixture: ASTM C 979/C 979M, synthetic or natural mineral-oxide pigments or colored water-reducing admixtures, temperature stable, and nonfading.

E. Water: Potable; free from deleterious material that may affect color stability, setting, or strength of concrete and complying with chemical limits of PCI MNL 117.

F. Air-Entraining Admixture: ASTM C 260, certified by manufacturer to be compatible with other required admixtures.

G. Chemical Admixtures: Certified by manufacturer to be compatible with other admixtures and to not contain calcium chloride, or more than 0.15 percent chloride ions or other salts by weight of admixture.

2.6 STEEL CONNECTION MATERIALS

A. Carbon-Steel Shapes and Plates: ASTM A 36/A 36M.

B. Carbon-Steel-Headed Studs: ASTM A 108, AISI 1018 through AISI 1020, cold finished, AWS D1.1/D1.1M, Type A or Type B, with arc shields and with minimum mechanical properties of PCI MNL 117, Table 3.2.3.

C. Carbon-Steel Plate: ASTM A 283/A 283M, Grade C.

D. Malleable Iron Castings: ASTM A 47/A 47M, Grade 32510 or Grade 35028.

E. Carbon-Steel Castings: ASTM A 27/A 27M, Grade 60-30.

F. High-Strength, Low-Alloy Structural Steel: ASTM A 572/A 572M.

G. Carbon-Steel Structural Tubing: ASTM A 500/A 500M, Grade B or Grade C.

H. Wrought Carbon-Steel Bars: ASTM A 675/A 675M, Grade 65.

I. Deformed-Steel Wire or Bar Anchors: ASTM A 496/A 496M or ASTM A 706/A 706M.

J. Carbon-Steel Bolts and Studs: ASTM A 307, Grade A or ASTM F 1554, Grade 36; carbon-steel, hex-head bolts and studs; carbon-steel nuts, ASTM A 563; and flat, unhardened steel washers, ASTM F 844.

K. High-Strength Bolts and Nuts: ASTM A 325, Type 1, heavy hex steel structural bolts; heavy hex carbon-steel nuts, ASTM A 563; and hardened carbon-steel washers, ASTM F 436.

L. Zinc-Coated Finish: For exterior steel items, steel in exterior walls, and items indicated for galvanizing, apply zinc coating by hot-dip process according to ASTM A 123/A 123M or ASTM A 153/A 153M.

1. For steel shapes, plates, and tubing to be galvanized, limit silicon content of steel to less than 0.03 percent or to between 0.15 and 0.25 percent or limit sum of silicon and 2.5 times phosphorous content to 0.09 percent.
2. Galvanizing Repair Paint: High-zinc-dust-content paint with dry film containing not less than 94 percent zinc dust by weight, and complying with DOD-P-21035B or SSPC-Paint 20.

M. Shop-Primed Finish: Prepare surfaces of nongalvanized steel items, except those surfaces to be embedded in concrete, according to requirements in SSPC-SP 3 and shop-apply lead- and chromate-free, rust-inhibitive primer, complying with performance requirements in MPI 79 according to SSPC-PA 1.

N. Welding Electrodes: Comply with AWS standards.

2.7 ACCESSORIES

A. Reglets: Specified in Section 076200 "Sheet Metal Flashing and Trim."

B. Precast Accessories: Provide clips, hangers, high-density plastic shims, and other accessories required to install architectural precast concrete units.

2.8 GROUT MATERIALS

A. Sand-Cement Grout: Portland cement, ASTM C 150/C 150M, Type I, and clean, natural sand, ASTM C 144 or ASTM C 404. Mix at ratio of 1 part cement to 2-1/2 to 3 parts sand, by volume, with minimum water required for placement and hydration. Water-soluble chloride ion content less than 0.06 percent by weight of cement when tested according to ASTM C 1218/C 1218M.

B. Nonmetallic, Nonshrink Grout: Packaged, nonmetallic, noncorrosive, nonstaining grout containing selected silica sands, portland cement, shrinkage-compensating agents, plasticizing and water-reducing agents, complying with ASTM C 1107/C 1107M, Grade A for drypack and Grades B and C for flowable grout and of consistency suitable for application within a 30-minute working time. Water-soluble chloride ion content less than 0.06 percent by weight of cement when tested according to ASTM C 1218/C 1218M.

C. Epoxy-Resin Grout: Two-component, mineral-filled epoxy resin; ASTM C 881/C 881M, of type, grade, and class to suit requirements.

2.9 CONCRETE MIXTURES

A. Prepare design mixtures for each type of precast concrete required.

1. Use a single design mixture for units with more than one major face or edge exposed.
2. Where only one face of unit is exposed use either a single design mixture or separate mixtures for face and backup.

B. Limit use of fly ash and ground granulated blast-furnace slag to 20 percent of portland cement by weight; limit metakaolin and silica fume to 10 percent of portland cement by weight.

C. Design mixtures may be prepared by a qualified independent testing agency or by qualified precast plant personnel at architectural precast concrete fabricator's option.

D. Limit water-soluble chloride ions to maximum percentage by weight of cement permitted by ACI 318 or PCI MNL 117 when tested according to ASTM C 1218/C 1218M.

E. Normal-Weight Concrete Mixtures: Proportion mixtures by either laboratory trial batch or field test data methods according to ACI 211.1, with materials to be used on Project, to provide normal-weight concrete with the following properties:

1. Compressive Strength (28 Days): 5000 psi minimum.

F. Water Absorption: 6 percent by weight or 14 percent by volume, tested according to ASTM C 642, except for boiling requirement.

G. Add air-entraining admixture at manufacturer's prescribed rate to result in concrete at point of placement having an air content complying with PCI MNL 117.

H. When included in design mixtures, add other admixtures to concrete mixtures according to manufacturer's written instructions.

2.10 FABRICATION

A. Cast-in Anchors, Inserts, Plates, Angles, and Other Anchorage Hardware: Fabricate anchorage hardware with sufficient anchorage and embedment to comply with design requirements. Accurately position for attachment of loose hardware, and secure in place during precasting operations. Locate anchorage hardware where it does not affect position of main reinforcement or concrete placement.

1. Weld-headed studs and deformed bar anchors used for anchorage according to AWS D1.1/D1.1M and AWS C5.4, "Recommended Practices for Stud Welding."

B. Anchors, attachment devices, and metal accessories in contact with the precast Unit shall be Type 304 Stainless Steel.

1. Unless indicated otherwise on the Drawings, provide anchors 32 inches on center but not less than 2 anchors per section of precast stone.
2. Provide anchors similar to Hohmann and Barnard #431.
3. Provide stainless steel fasteners to attach anchors to concrete masonry or steel stud backup. The Contractor to verify field conditions and determine fastener hole diameter prior to ordering.

C. Furnish loose hardware items including steel plates, clip angles, seat angles, anchors, dowels, cramps, hangers, and other hardware shapes for securing architectural precast concrete units to supporting and adjacent construction.

D. Cast-in reglets, slots, holes, and other accessories in architectural precast concrete units as indicated on the Contract Drawings.

E. Reinforcement: Comply with recommendations in PCI MNL 117 for fabricating, placing, and supporting reinforcement.

F. Reinforce architectural precast concrete units to resist handling, transportation, and erection stresses and specified in-place loads.

G. Comply with requirements in PCI MNL 117 and requirements in this Section for measuring, mixing, transporting, and placing concrete. After concrete batching, no additional water may be added.

H. Place face mixture to a minimum thickness after consolidation of the greater of 1 inch or 1.5 times the maximum aggregate size, but not less than the minimum reinforcing cover specified.

I. Place concrete in a continuous operation to prevent cold joints or planes of weakness from forming in precast concrete units.

1. Place backup concrete mixture to ensure bond with face-mixture concrete.

J. Thoroughly consolidate placed concrete by internal and external vibration without dislocating or damaging reinforcement and built-in items, and minimize pour lines, honeycombing, or entrapped air voids on surfaces. Use equipment and procedures complying with PCI MNL 117.

1. Place self-consolidating concrete without vibration according to PCI TR-6, "Interim Guidelines for the Use of Self-Consolidating Concrete in Precast/Prestressed Concrete Institute Member Plants." Ensure adequate bond between face and backup concrete, if used.

K. Comply with PCI MNL 117 for hot- and cold-weather concrete placement.

L. Identify pickup points of architectural precast concrete units and orientation in structure with permanent markings, complying with markings indicated on Shop Drawings. Imprint or permanently mark casting date on each architectural precast concrete unit on a surface that does not show in finished structure.

M. Cure concrete, according to requirements in PCI MNL 117, by moisture retention without heat or by accelerated heat curing using low-pressure live steam or radiant heat and moisture. Cure units until compressive strength is high enough to ensure that stripping does not have an effect on performance or appearance of final product.

N. Discard and replace architectural precast concrete units that do not comply with requirements, including structural, manufacturing tolerance, and appearance, unless repairs meet requirements in PCI MNL 117 and Architect's approval.

2.11 FABRICATION TOLERANCES

A. Fabricate architectural precast concrete units to shapes, lines, and dimensions indicated so each finished unit complies with PCI MNL 117 product tolerances as well as position tolerances for cast-in items.

2.12 FINISHES

A. Exposed faces shall be free of joint marks, grain, and other obvious defects. Corners, including false joints shall be uniform, straight, and sharp. Finish exposed-face surfaces of architectural precast concrete units to match approved design reference sample and as follows:

B. Finish exposed top surfaces of architectural precast concrete units to match face-surface finish.

C. Finish unexposed surfaces of architectural precast concrete units with as cast finish.

2.13 SOURCE QUALITY CONTROL

A. Quality-Control Testing: Test and inspect precast concrete according to PCI MNL 117 requirements. If using self-consolidating concrete, also test and inspect according to PCI TR-6, ASTM C 1610/C 1610M, ASTM C 1611/C 1611M, ASTM C 1621/C 1621M, and ASTM C 1712.

B. Strength of precast concrete units is considered deficient if units fail to comply with ACI 318 requirements for concrete strength.

C. Testing: If there is evidence that strength of precast concrete units may be deficient or may not comply with ACI 318 requirements, precaster will employ an independent testing agency to obtain, prepare, and test cores drilled from hardened concrete to determine compressive strength according to ASTM C 42/C 42M and ACI 318.

1. A minimum of three representative cores shall be taken from units of suspect strength, from locations directed by Architect.
2. Test cores in an air-dry condition.
3. Report test results in writing on same day that tests are performed, with copies to Architect, Contractor, and precast concrete fabricator. Test reports include the following:

   a. Project identification name and number.
   b. Date when tests were performed.
   c. Name of precast concrete fabricator.
   d. Name of concrete testing agency.
   e. Identification letter, name, and type of precast concrete unit(s) represented by core tests; design compressive strength; type of break; compressive strength at breaks, corrected for length-diameter ratio; and direction of applied load to core in relation to horizontal plane of concrete as placed.

D. Patching: If core test results are satisfactory and precast concrete units comply with requirements, clean and dampen core holes and solidly fill with precast concrete mixture that has no coarse aggregate, and finish to match adjacent precast concrete surfaces.

E. Defective Units: Discard and replace recast architectural concrete units that do not comply with acceptability requirements in PCI MNL 117, including concrete strength, manufacturing tolerances, and color and texture range. Chipped, spalled, or cracked units may be repaired, subject to Architect's approval. Architect reserves the right to reject precast units that do not match approved samples, sample panels, and mockups. Replace unacceptable units with precast concrete units that comply with requirements.

PART 3 - EXECUTION

3.1 EXAMINATION

A. Examine supporting structural frame or foundation and conditions for compliance with requirements for installation tolerances, bearing surface tolerances, and other conditions affecting performance of the Work.

B. Do not install precast concrete units until supporting cast-in-place concrete has attained minimum allowable design compressive strength and supporting steel or other structure is structurally ready to receive loads from precast concrete units.

C. Proceed with installation only after unsatisfactory conditions have been corrected.

3.2 INSTALLATION

A. Install clips, hangers, bearing pads, and other accessories required for connecting architectural precast concrete units to supporting members and backup materials.

B. Erect architectural precast concrete level, plumb, and square within specified allowable tolerances. Provide temporary supports and bracing as required to maintain position, stability, and alignment of units until permanent connections are completed.

1. Install temporary steel or plastic spacing shims as precast concrete units are being erected. Tack weld steel shims to each other to prevent shims from separating.
2. Maintain horizontal and vertical joint alignment and uniform joint width as erection progresses.
3. Remove projecting lifting devices and grout fill voids within recessed lifting devices flush with surface of adjacent precast surfaces when recess is exposed.
4. Unless otherwise indicated, maintain uniform joint widths of 3/4 inch.

C. Connect architectural precast concrete units in position by bolting, welding, grouting, or as otherwise indicated on Shop Drawings. Remove temporary shims, wedges, and spacers as soon as practical after connecting and grouting are completed.

1. Do not permit connections to disrupt continuity of roof flashing.

D. Welding: Comply with applicable requirements in AWS D1.1/D1.1M and AWS D1.4/D1.4M for welding, welding electrodes, appearance, quality of welds, and methods used in correcting welding work.

1. Protect architectural precast concrete units and bearing pads from damage by field welding or cutting operations, and provide noncombustible shields as required.
2. Welds not specified shall be continuous fillet welds, using no less than the minimum fillet as specified by AWS.
3. Clean weld-affected metal surfaces with chipping hammer followed by brushing, and apply a minimum 4.0-mil-thick coat of galvanized repair paint to galvanized surfaces according to ASTM A 780/A 780M.
4. Visually inspect welds and remove, reweld, or repair incomplete and defective welds.

E. At bolted connections, use lock washers, tack welding, or other approved means to prevent loosening of nuts after final adjustment.

1. Where slotted connections are used, verify bolt position and tightness. For sliding connections, properly secure bolt but allow bolt to move within connection slot.
2. For slip-critical connections, use one of the following methods to assure proper bolt pretension:

   a. Turn-of-Nut: According to RCSC's "Specification for Structural Joints Using ASTM A 325 or A 490 Bolts."
   b. Calibrated Wrench: According to RCSC's "Specification for Structural Joints Using ASTM A 325 or A 490 Bolts."
   c. Twist-off Tension Control Bolt: ASTM F 1852.
   d. Direct-Tension Control Bolt: ASTM F 1852.

3. For slip-critical connections, use method and inspection procedure approved by Architect and coordinated with inspection agency.

F. Grouting or Dry-Packing Connections and Joints: Grout connections where required or indicated. Retain flowable grout in place until hard enough to support itself. Alternatively, pack spaces with stiff dry-pack grout material, tamping until voids are completely filled. Place grout and finish smooth, level, and plumb with adjacent concrete surfaces. Promptly remove grout material from exposed surfaces before it affects finishes or hardens. Keep grouted joints damp for not less than 24 hours after initial set.

3.3 ERECTION TOLERANCES

A. Erect architectural precast concrete units level, plumb, square, and in alignment without exceeding the noncumulative erection tolerances of PCI MNL 117, Appendix I.

3.4 FIELD QUALITY CONTROL

A. Special Inspections: Engage a qualified special inspector to perform the following special inspections and prepare reports:

1. Erection of loadbearing precast concrete members.

B. Testing Agency: Engage a qualified testing agency to perform tests and inspections and prepare test reports.

C. Visually inspect field welds and test according to ASTM E 165 or to ASTM E 709 and ASTM E 1444. High-strength bolted connections are subject to inspections.

D. Testing agency will report test results promptly and in writing to Contractor and Architect.

E. Repair or remove and replace work where tests and inspections indicate that it does not comply with specified requirements.

F. Additional testing and inspecting, at Contractor's expense, shall be performed to determine compliance of replaced or additional work with specified requirements.

3.5 REPAIRS

A. Repair architectural precast concrete units if permitted by Architect. Architect reserves the right to reject repaired units that do not comply with requirements.

B. Mix patching materials and repair units so cured patches blend with color, texture, and uniformity of adjacent exposed surfaces and show no apparent line of demarcation between original and repaired work, when viewed in typical daylight illumination from a distance of 20 feet.

C. Prepare and repair damaged galvanized coatings with galvanizing repair paint according to ASTM A 780/A 780M.

D. Remove and replace damaged architectural precast concrete units when repairs do not comply with requirements.

3.6 CLEANING

A. Clean surfaces of precast concrete units exposed to view.

B. Clean mortar, plaster, fireproofing, weld slag, and other deleterious material from concrete surfaces and adjacent materials immediately.

C. Clean exposed surfaces of precast concrete units after erection and completion of joint treatment to remove weld marks, other markings, dirt, and stains.

1. Perform cleaning procedures, if necessary, according to precast concrete fabricator's recommendations. Protect other work from staining or damage due to cleaning operations.
2. Do not use cleaning materials or processes that could change the appearance of exposed concrete finishes or damage adjacent materials.

END OF SECTION

SECTION 034900

GLASS-FIBER-REINFORCED CONCRETE (GFRC)

PART 1 - GENERAL

1.1 RELATED DOCUMENTS

A. Drawings and general provisions of the Contract, including General and Supplementary Conditions and Division 01 Specification Sections, apply to this Section.

1.2 SUMMARY

A. Section includes glass-fiber-reinforced concrete (GFRC) panels consisting of GFRC, panel frames, anchors, and connection hardware.

1. GFRC panels include column covers and balustrade.

1.3 PREINSTALLATION MEETINGS

A. Preinstallation Conference: Conduct conference at Project site.

1.4 ACTION SUBMITTALS

A. Product Data: For each type of product. Include GFRC design mixes.

B. Shop Drawings: Show fabrication and installation details for GFRC panels including the following:

1. Panel elevations, sections, and dimensions.
2. Thickness of facing mix, GFRC backing, and bonding pads for typical panels.
3. Finishes.
4. Joint and connection details.
5. Erection details.
6. Panel frame details for typical panels including sizes, spacings, thicknesses, and yield strengths of various members.
7. Locations and details of connection hardware attached to structure.
8. Sizes, locations, and details of flex, gravity, and seismic anchors for typical panels.
9. Other items sprayed into panels.
10. Erection sequence for special conditions.
11. Relationship to adjacent materials.
12. Description of loose, cast-in, and field hardware.

C. Samples: For each type of finish indicated on exposed GFRC surfaces, representative of finish, color, and texture variations expected, approximately 12 by 12 inches by actual thickness.

D. Delegated-Design Submittal: For GFRC panels, including analysis data signed and sealed by the qualified professional engineer responsible for their preparation.

1.5 INFORMATIONAL SUBMITTALS

A. Qualification Data: For manufacturer.

B. Welding certificates.

C. Source Quality-Control Program: For GFRC manufacturer.

D. Source Quality-Control Test Reports: For GFRC, inserts, and anchors.

1.6 QUALITY ASSURANCE

A. Manufacturer Qualifications: Designated a PCI-certified plant for Group G - Glass Fiber Reinforced Concrete or designated an APA-certified plant for GFRC production.

B. Installer Qualifications: Manufacturer of GFRC panels.

C. Welding Qualifications: Qualify procedures and personnel according to AWS D1.1/D1.1M, "Structural Welding Code - Steel," and AWS D1.3/D1.3M, "Structural Welding Code - Sheet Steel."

1.7 DELIVERY, STORAGE, AND HANDLING

A. Handle and transport GFRC panels supported on nonstaining material and with nonstaining resilient spacers between panels.

B. Store GFRC panels off of ground on firm, level, and smooth surfaces supported on nonstaining material and with nonstaining resilient spacers between panels. Place stored panels so identification marks are clearly visible.

PART 2 - GENERAL

2.1 MANUFACTURERS

A. Manufacturers: Subject to compliance with requirements, available manufacturers offering products that may be incorporated into the Work include, but are not limited to, the following:

1. Custom Castings Northeast Inc.
2. Formglas Products Ltd.
3. Stromberg Architectural Products.

B. Source Limitations: Obtain GFRC column covers from single source from single manufacturer.

2.2 PERFORMANCE REQUIREMENTS

A. Delegated Design: Engage a qualified professional engineer, as defined in Section 014000 "Quality Requirements," to design GFRC panels, including panel frames, anchors, and connections.

B. Structural Performance: GFRC column covers, including panel frames, anchors, and connections, shall withstand the following design loads as well as the effects of thermal- and moisture-induced dimensional changes within limits and under conditions indicated:

1. Design Loads: As indicated.
2. Deflection Limits: Design panel frames to withstand design loads without lateral deflections greater than 1/240 of wall span.
3. Thermal Movements: Provide for thermal movements resulting from annual ambient temperature changes of 80 deg F.

C. PCI Manuals: Comply with requirements and recommendations in the following PCI manuals unless more stringent requirements are indicated:

1. PCI MNL 128, "Recommended Practice for Glass Fiber Reinforced Concrete Panels."
2. PCI MNL 130, "Manual for Quality Control for Plants and Production of Glass Fiber Reinforced Concrete Products."

2.3 MOLD MATERIALS

A. Molds: Rigid, dimensionally stable, non-absorptive material, warp and buckle free, that provides continuous GFRC surfaces within tolerances; nonreactive with GFRC and capable of producing required finish surfaces.

1. Mold-Release Agent: Commercially produced liquid-release agent that does not bond with, stain, or adversely affect GFRC surfaces and does not impair subsequent surface or joint treatments of GFRC.

2.4 GFRC MATERIALS

A. Portland Cement: ASTM C 150/C 150M; Type I, II, or III.

1. For surfaces exposed to view in finished structure, use white of same type, brand, and source throughout GFRC production.

B. Metakaolin: ASTM C 618, Class N.

C. Glass Fibers: Alkali resistant, with a minimum zirconia content of 16 percent, 1 to 2 inches long, specifically produced for use in GFRC, and complying with ASTM C 1666/C 1666M.

D. Sand: Washed and dried silica, complying with composition requirements in ASTM C 144; passing a No. 20 sieve with a maximum of 2 percent passing a No. 100 sieve.

E. Coloring Admixture: ASTM C 979/C 979M, synthetic mineral-oxide pigments or colored water-reducing admixtures, temperature stable, nonfading, and alkali resistant.

F. Water: Potable; free from deleterious material that may affect color stability, setting, or strength of GFRC and complying with chemical limits in PCI MNL 130.

G. Air-Entraining Admixture: ASTM C 260/C 260M, containing not more than 0.1 percent chloride ions.

2.5 ANCHORS, CONNECTORS, AND MISCELLANEOUS MATERIALS

A. Stainless-Steel Plates: ASTM A 240/A 240M or ASTM A 666, Type 304.

B. Carbon-Steel Shapes and Plates: ASTM A 36/A 36M, finished as follows:

1. Finish: Zinc coated by hot-dip process according to ASTM A 123/A 123M, after fabrication, or ASTM A 153/A 153M, as applicable.
2. Finish: Shop primed with paint complying with MPI#79 on surfaces prepared to comply with SSPC-SP 2, "Hand Tool Cleaning," or better.

C. Stainless-Steel Bars and Shapes: ASTM A 276, Type 304.

D. Carbon-Steel Bars: ASTM A 108, Grade 1018, not less than 1/4 inch in diameter, finished as follows:

1. Finish: Zinc coated by hot-dip process according to ASTM A 123/A 123M, after fabrication, or ASTM A 153/A 153M, as applicable.
2. Finish: Shop primed with paint complying with MPI#79 on surfaces prepared to comply with SSPC-SP 2, "Hand Tool Cleaning," or better.

E. Bolts: ASTM A 307 or ASTM A 325, finished as follows:

1. Finish: Zinc coated by hot-dip process according to ASTM A 123/A 123M, after fabrication, and ASTM A 153/A 153M, as applicable.

F. Reglets: Stainless steel, ASTM A 240/A 240M, Type 304, 0.016 inch thick.

2.6 GFRC MIXES

A. Provide one of the following GFRC mixes matching Architects sample:
1. Mist Coat: Portland cement, sand slurry, and admixtures; of same proportions as backing mix without glass fibers.
2. Face Mix: Proportion face mix of portland cement, sand, facing aggregates, and admixtures to comply with design requirements.

B. Backing Mix: Proportion backing mix of portland cement, glass fibers, sand, and admixtures to comply with design requirements. Provide nominal glass-fiber content of not less than 5 percent by weight of total mix.

C. Polymer-Curing Admixture: 6 to 7 percent by weight of polymer-curing admixture solids to dry portland cement.

D. Content: 8 to 10 percent; ASTM C 185.

E. Coloring Admixture: Not to exceed 10 percent of cement weight.

2.7 MOLD FABRICATION

A. Construct molds that result in finished GFRC complying with profiles, dimensions, and tolerances indicated, without damaging GFRC during stripping. Construct molds to prevent water leakage and loss of cement paste.

1. Coat contact surfaces of molds with form-release agent.

B. Locate, place, and secure flashing reglets accurately.

2.8 GFRC FABRICATION

A. Proportioning and Mixing: For backing mix, meter sand/cement slurry and glass fibers to spray head at rates to achieve design mix proportions and glass-fiber content according to PCI MNL 130 procedures.

B. Spray Application: Comply with Architects sample and general procedures as follows:

1. Spray mist coat over molds to a nominal thickness of 1/8 inch on planar surfaces.
2. Spray or place face mix in thickness indicated on Shop Drawings.
3. Proceed with spraying backing mix before face mix or mist coat has set, using procedures that produce a uniform thickness and even distribution of glass fibers and matrix.
4. Consolidate backing mix by rolling or other technique to achieve complete encapsulation of glass fibers and compaction.
5. Measure thickness with a pin gage or other acceptable method at least once for every 5 sq. ft. of panel surface. Take no fewer than six measurements per panel.

C. Hand form and consolidate intricate details, incorporate formers or infill materials, and overspray before material reaches initial set to ensure complete bonding.

D. Inserts and Embedments: Build up homogeneous GFRC bosses or bonding pads over inserts and embedments to provide enough anchorage and embedment to comply with design requirements.

E. Curing: Employ initial curing method that ensures sufficient strength for removing units from mold. Comply with PCI MNL 130 procedures.

1. Keep moisture off of the surfaces of mixes with polymer curing admixtures during the first three hours of curing. Maintain temperature between 60 and 120 deg Fduring the first 16 hours.
2. Prevent drying of moist curing mixes during the first 24 hours. Maintain units in surface-damp condition at a temperature above 60 deg F and 95 percent relative humidity for seven days.

2.9 FABRICATION TOLERANCES

A. Manufacturing Tolerances: Manufacture GFRC panels so each finished unit complies with PCI MNL 130 for dimension, position, and tolerances.

2.10 FINISHES

A. Exposed faces shall be free of joint marks, grain, and other obvious defects. Corners, including false joints, shall be uniform, straight, and sharp. Finish exposed-face surfaces of GFRC to match approved design reference sample.

2.11 SOURCE QUALITY CONTROL

A. Quality-Control Testing: Establish and maintain a quality-control program for manufacturing GFRC panels according to PCI MNL 130.

1. Test materials and inspect production techniques.
2. Quality-control program shall monitor glass-fiber content, spray rate, unit weight, product physical properties, anchor pull-off and shear strength, and curing period and conditions.
3. Prepare test specimens and test according to ASTM C 1228, PCI MNL 130, and PCI MNL 128 procedures.
4. Test GFRC inserts and anchors according to ASTM C 1230 to validate design values.
5. Produce test boards at a rate of no fewer than one per work shift per operator for each spray machine and for each mix design.

   a. For each test board, determine glass-fiber content according to ASTM C 1229 and flexural yield and ultimate strength according to ASTM C 947.

PART 3 - EXECUTION

3.1 EXAMINATION

A. Examine structure and conditions for compliance with requirements for installation tolerances, bearing surfaces, and other conditions affecting performance of the Work.

B. Proceed with installation only after unsatisfactory conditions have been corrected.

3.2 ERECTION

A. Install clips, hangers, and other accessories required for connecting GFRC column covers to supporting members and backup materials.

B. Install GFRC panels level, plumb, square, and in alignment. Provide temporary supports and bracing as required to maintain position, stability, and alignment of panels until permanent connections are completed.

1. Maintain horizontal and vertical joint alignment and uniform joint width.

C. Connect GFRC panels in position by bolting or welding, or both, as indicated on Shop Drawings. Remove temporary shims, wedges, and spacers as soon as possible after connecting is completed.

D. Welding: Comply with applicable AWS D1.1/D1.1M and AWS D1.3/D1.3M requirements for welding, appearance, quality of welds, and methods used in correcting welding work.

1. Protect GFRC panels from damage by field welding or cutting operations, and provide noncombustible shields as required.

E. At bolted connections, use lock washers or other acceptable means to prevent loosening of nuts.

F. Erect GFRC panels to comply with the following noncumulative tolerances:

1. Plan Location from Building Grid Datum: Plus or minus 1/2 inch.
2. Top Elevation from Nominal Top Elevation: As follows:

    a. Exposed Individual Panel: Plus or minus 1/4 inch.
    b. Nonexposed Individual Panel: Plus or minus 1/2 inch.
    c. Exposed Panel Relative to Adjacent Panel: 1/4 inch.
    d. Nonexposed Panel Relative to Adjacent Panel: 1/2 inch.

3. Support Elevation from Nominal Elevation: As follows:

    a. Maximum Low: 1/2 inch.
    b. Maximum High: 1/4 inch.

4. Maximum Plumb Variation over the Lesser of Height of Structure or 100 Feet: 1 inch.
5. Plumb in Any 10 Feet of Element Height: 1/4 inch.
6. Maximum Offset in Alignment of Matching Edges: 1/4 inch.
7. Face Width of Joint: As follows (governs over joint taper):

    a. Panel Dimension 20 Feet or Less: Plus or minus 1/4 inch.
    b. Panel Dimension More Than 20 Feet Plus or minus 3/8 inch.

8. Maximum Joint Taper: 3/8 inch.
9. Maximum Joint Taper in 10 Feet: 1/4 inch.
10. Differential Bowing, as Erected, between Adjacent Members of Same Design: 1/4 inch.

3.3 REPAIRS

A. Repairs are permitted provided structural adequacy of GFRC column covers and appearance are not impaired, as approved by Architect.

B. Mix patching materials and repair GFRC so cured patches blend with color, texture, and uniformity of adjacent exposed surfaces.

C. Prepare and repair accessible damaged galvanized coatings with galvanizing repair paint according to ASTM A 780/A 780M.

D. Wire brush and clean accessible weld areas on prime-painted components and paint with same type of shop primer.

E. Remove and replace damaged GFRC column covers when repairs do not comply with requirements.

3.4 CLEANING AND PROTECTION

A. Perform cleaning procedures, if necessary, according to GFRC manufacturer's written instructions. Clean soiled GFRC surfaces with detergent and water, using soft fiber brushes and sponges, and rinse with clean water. Prevent damage to GFRC surfaces and staining of adjacent materials.

END OF SECTION

SECTION 042000

UNIT MASONRY

PART 1 - GENERAL

1.1 RELATED DOCUMENTS

A. Drawings and general provisions of the Contract, including General and Supplementary Conditions and Division 01 Specification Sections, apply to this Section.

1.2 SUMMARY

A. Section Includes:

1. Concrete masonry units.
2. Concrete building brick.
3. Decorative concrete masonry units.
4. Clay face brick.
5. Mortar and grout.
6. Steel reinforcing bars.
7. Masonry-joint reinforcement.
8. Ties and anchors.
9. Embedded flashing.
10. Miscellaneous masonry accessories.

B. Products Installed but not Furnished under This Section:

1. Cast-stone trim in unit masonry.
2. Steel lintels in unit masonry.
3. Steel shelf angles for supporting unit masonry.
4. Cavity wall insulation.

1.3 DEFINITIONS

A. CMU(s): Concrete masonry unit(s).

B. Reinforced Masonry: Masonry containing reinforcing steel in grouted cells.

1.4 PREINSTALLATION MEETINGS

A. Preinstallation Conference: Conduct conference at Project site.

1.5 ACTION SUBMITTALS

A. Product Data: For each type of product.

B. Shop Drawings: For the following:

1. Masonry Units: Show sizes, profiles, coursing, and locations of special shapes.
2. Reinforcing Steel: Detail bending, lap lengths, and placement of unit masonry reinforcing bars. Comply with ACI 315. Show elevations of reinforced walls.
3. Fabricated Flashing: Detail corner units, end-dam units, and other special applications.

C. Samples for Initial Selection:

1. Decorative CMUs, in the form of small-scale units.
2. Clay face brick.
3. Colored mortar.
4. Weep holes/cavity vents.

D. Samples for Verification: For each type and color of the following:

1. Decorative CMUs.
2. Clay face brick.
3. Special brick shapes.
4. Pigmented and colored-aggregate mortar. Make Samples using same sand and mortar ingredients to be used on Project.
5. Weep holes and cavity vents.
6. Accessories embedded in masonry.

1.6 INFORMATIONAL SUBMITTALS

A. Qualification Data: For testing agency.

B. Material Certificates: For each type and size of the following:

1. Masonry units.

   a. Include data on material properties.
   b. For brick, include size-variation data verifying that actual range of sizes falls within specified tolerances.
   c. For exposed brick, include test report for efflorescence according to ASTM C 67.

2. Integral water repellent used in CMUs.
3. Cementitious materials. Include name of manufacturer, brand name, and type.
4. Mortar admixtures.
5. Preblended, dry mortar mixes. Include description of type and proportions of ingredients.
6. Grout mixes. Include description of type and proportions of ingredients.
7. Reinforcing bars.
8. Joint reinforcement.
9. Anchors, ties, and metal accessories.

C. Mix Designs: For each type of mortar and grout. Include description of type and proportions of ingredients.

1. Include test reports for mortar mixes required to comply with property specification. Test according to ASTM C 109/C 109M for compressive strength, ASTM C 1506 for water retention, and ASTM C 91/C 91M for air content.
2. Include test reports, according to ASTM C 1019, for grout mixes required to comply with compressive strength requirement.

D. Statement of Compressive Strength of Masonry: For each combination of masonry unit type and mortar type, provide statement of average net-area compressive strength of masonry units, mortar type, and resulting net-area compressive strength of masonry determined according to TMS 602/ACI 530.1/ASCE 6.

E. Cold-Weather and Hot-Weather Procedures: Detailed description of methods, materials, and equipment to be used to comply with requirements.

1.7 QUALITY ASSURANCE

A. Testing Agency Qualifications: Qualified according to ASTM C 1093 for testing indicated.

B. Mockups: Build mockups to verify selections made under Sample submittals, to demonstrate aesthetic effects, and to set quality standards for materials and execution.

1. Build mockups for typical exterior wall in sizes approximately 8 ft. long by 8 ft. high by full thickness, including face and backup wythes and accessories.

    a. Include a sealant-filled joint at least 16 inches long in exterior wall mockup.
    b. Include lower corner of window opening at upper corner of exterior wall mockup. Make opening approximately 12 inches wide by 16 inches high.
    c. Include through-wall flashing installed for a 24-inch length in corner of exterior wall mockup approximately 16 inches down from top of mockup, with a 12-inch length of flashing left exposed to view (omit masonry above half of flashing).
    d. Include metal studs, sheathing, sheathing joint-and-penetration treatment, veneer anchors, flashing, cavity drainage material, and weep holes in exterior masonry-veneer wall mockup.
    e. Include clay face brick on one face of interior unit masonry wall mockup.

2. Where masonry is to match existing, erect mockups adjacent and parallel to existing surface.
3. Clean one-half of exposed faces of mockups with masonry cleaner as indicated.
4. Protect accepted mockups from the elements with weather-resistant membrane.
5. Approval of mockups is for color, texture, and blending of masonry units; relationship of mortar and sealant colors to masonry unit colors; tooling of joints; and aesthetic qualities of workmanship.
6. Remove mockup at completion of masonry work.

1.8 DELIVERY, STORAGE, AND HANDLING

A. Store masonry units on elevated platforms in a dry location. If units are not stored in an enclosed location, cover tops and sides of stacks with waterproof sheeting, securely tied. If units become wet, do not install until they are dry.

B. Store cementitious materials on elevated platforms, under cover, and in a dry location. Do not use cementitious materials that have become damp.

C. Store aggregates where grading and other required characteristics can be maintained and contamination avoided.

D. Deliver preblended, dry mortar mix in moisture-resistant containers. Store preblended, dry mortar mix in delivery containers on elevated platforms in a dry location or in covered weatherproof dispensing silos.

E. Store masonry accessories, including metal items, to prevent corrosion and accumulation of dirt and oil.

1.9 FIELD CONDITIONS

A. Protection of Masonry: During construction, cover tops of walls, projections, and sills with waterproof sheeting at end of each day's work. Cover partially completed masonry when construction is not in progress.

1. Extend cover a minimum of 24 inches down both sides of walls, and hold cover securely in place.
2. Where one wythe of multiwythe masonry walls is completed in advance of other wythes, secure cover a minimum of 24 inches down face next to unconstructed wythe, and hold cover in place.

B. Do not apply uniform floor or roof loads for at least 12 hours and concentrated loads for at least three days after building masonry walls or columns.

C. Stain Prevention: Prevent grout, mortar, and soil from staining the face of masonry to be left exposed or painted. Immediately remove grout, mortar, and soil that come in contact with such masonry.

1. Protect base of walls from rain-splashed mud and from mortar splatter by spreading coverings on ground and over wall surface.
2. Protect sills, ledges, and projections from mortar droppings.
3. Protect surfaces of window and door frames, as well as similar products with painted and integral finishes, from mortar droppings.
4. Turn scaffold boards near the wall on edge at the end of each day to prevent rain from splashing mortar and dirt onto completed masonry.

D. Cold-Weather Requirements: Do not use frozen materials or materials mixed or coated with ice or frost. Do not build on frozen substrates. Remove and replace unit masonry damaged by frost or by freezing conditions. Comply with cold-weather construction requirements contained in TMS 602/ACI 530.1/ASCE 6.

1. Cold-Weather Cleaning: Use liquid cleaning methods only when air temperature is 40 deg F and higher and will remain so until masonry has dried, but not less than seven days after completing cleaning.

E. Hot-Weather Requirements: Comply with hot-weather construction requirements contained in TMS 602/ACI 530.1/ASCE 6.

PART 2 - PRODUCTS

2.1 MANUFACTURERS

A. Source Limitations for Masonry Units: Obtain exposed masonry units of a uniform texture and color, or a uniform blend within the ranges accepted for these characteristics, from single source from single manufacturer for each product required.

B. Source Limitations for Mortar Materials: Obtain mortar ingredients of a uniform quality, including color for exposed masonry, from single manufacturer for each cementitious component and from single source or producer for each aggregate.

2.2 PERFORMANCE REQUIREMENTS

A. Provide structural unit masonry that develops indicated net-area compressive strengths at 28 days.

2.3 UNIT MASONRY, GENERAL

A. Masonry Standard: Comply with TMS 602/ACI 530.1/ASCE 6, except as modified by requirements in the Contract Documents.

B. Defective Units: Referenced masonry unit standards may allow a certain percentage of units to contain chips, cracks, or other defects exceeding limits stated. Do not use units where such defects are exposed in the completed Work.

C. Fire-Resistance Ratings: Comply with requirements for fire-resistance-rated assembly designs indicated.

1. Where fire-resistance-rated construction is indicated, units shall be listed and labeled by a qualified testing agency acceptable to authorities having jurisdiction.

2.4 CONCRETE MASONRY UNITS

A. Shapes: Provide shapes indicated and as follows, with exposed surfaces matching exposed faces of adjacent units unless otherwise indicated.

1. Provide special shapes for lintels, corners, jambs, sashes, movement joints, headers, bonding, and other special conditions.
2. Provide bullnose CMU units for outside corners unless otherwise indicated.

B. Integral Water Repellent: Provide units made with integral water repellent for exposed units and where indicated.

1. Integral Water Repellent: Liquid polymeric, integral water-repellent admixture that does not reduce flexural bond strength. Units made with integral water repellent, when tested according to ASTM E 514/E 514M as a wall assembly made with mortar containing integral water-repellent manufacturer's mortar additive, with test period extended to 24 hours, shall show no visible water or leaks on the back of test specimen.

a. Manufacturers: Subject to compliance with requirements, available manufacturers offering products that may be incorporated into the Work include, but are not limited to the following:

1) BASF Corp. - Construction Chemicals.
2) Euclid Chemical Company (The); an RPM company.
3) GCP Applied Technologies Inc. (formerly Grace Construction Products).

C. CMUs: ASTM C 90.

1. Density Classification: Normal weight.
2. Size (Width): Manufactured to dimensions 3/8 inch less than nominal dimensions.
3. Exposed Faces: Provide color and texture matching the range represented by Architect's sample.

D. Concrete Building Brick: ASTM C 55.

1. Density Classification: Normal weight.

E. Decorative CMUs: ASTM C 90.

1. Density Classification: Normal weight.
2. Size (Width): Manufactured to dimensions specified in "CMUs" Paragraph.
3. Pattern and Texture:

a. Standard pattern, split-face finish. Match Architect's samples.

4. Manufacturer and Color:

a. Westbrook Concrete Block Co.; SF-349a.
b. Nitterhouse Concrete; NM-135.

2.5 BRICK

A. General: Provide shapes indicated and as follows, with exposed surfaces matching finish and color of exposed faces of adjacent units:

1. For ends of sills and caps and for similar applications that would otherwise expose unfinished brick surfaces, provide units without cores or frogs and with exposed surfaces finished.
2. Provide special shapes for applications requiring brick of size, form, color, and texture on exposed surfaces that cannot be produced by sawing.

B. Clay Face Brick: Facing brick complying with ASTM C 216.

1. Basis of Design Product: Subject to compliance with requirements, provide the following:

a. Bristol (M) Sand Smooth T-8 Regal Cored.
b. Bowerston Shale Co.; Frisco Blend, Meridian size.

2. Grade: SW.
3. Type: FBS.
4. Initial Rate of Absorption: Less than 30 g/30 sq. in. per minute when tested according to ASTM C 67.
5. Efflorescence: Provide brick that has been tested according to ASTM C 67 and is rated "not effloresced."
6. Size (Actual Dimensions): 3-5/8 by 3-5/8 by 15-5/8 inches.
7. Application: Use where brick is exposed unless otherwise indicated.

2.6 MORTAR AND GROUT MATERIALS

A. Portland Cement: ASTM C 150/C 150M, Type I or II, except Type III may be used for cold-weather construction. Provide natural color or white cement as required to produce mortar color indicated.

1. Alkali content shall not be more than 0.1 percent when tested according to ASTM C 114.

B. Hydrated Lime: ASTM C 207, Type S.

C. Portland Cement-Lime Mix: Packaged blend of portland cement and hydrated lime containing no other ingredients.

D. Mortar Cement: ASTM C 1329/C 1329M.

E. Mortar Pigments: Natural and synthetic iron oxides and chromium oxides, compounded for use in mortar mixes and complying with ASTM C 979/C 979M. Use only pigments with a record of satisfactory performance in masonry mortar.

1. Manufacturers: Subject to compliance with requirements, available manufacturers offering products that may be incorporated into the Work include, but are not limited to the following:

a. Davis Colors.
b. Euclid Chemical Company (The); an RPM company.
c. Lanxess Corporation.
d. Solomon Colors, Inc.

F. Colored Cement Products: Packaged blend made from portland cement and hydrated lime and mortar pigments, all complying with specified requirements, and containing no other ingredients.

1. Colored Portland Cement-Lime Mix:

a. Manufacturers: Subject to compliance with requirements, available manufacturers offering products that may be incorporated into the Work include, but are not limited to the following:

1) Essroc.
2) Holcim (US) Inc.
3) Lafarge North America Inc.
4) Lehigh Hanson; HeidelbergCement Group.

2. Formulate blend as required to produce color indicated or, if not indicated, as selected from manufacturer's standard colors.

3. For mortar that is exposed to view, use washed aggregate consisting of natural sand or crushed stone.
4. For joints less than 1/4 inch thick, use aggregate graded with 100 percent passing the No. 16 sieve.
5. White-Mortar Aggregates: Natural white sand or crushed white stone.
6. Colored-Mortar Aggregates: Natural sand or crushed stone of color necessary to produce required mortar color.

G. Aggregate for Grout: ASTM C 404.

H. Cold-Weather Admixture: Nonchloride, noncorrosive, accelerating admixture complying with ASTM C 494/C 494M, Type C, and recommended by manufacturer for use in masonry mortar of composition indicated.

I. Water-Repellent Admixture: Liquid water-repellent mortar admixture intended for use with CMUs containing integral water repellent from same manufacturer.

1. Manufacturers: Subject to compliance with requirements, available manufacturers offering products that may be incorporated into the Work include, but are not limited to the following:

a. BASF Corp. - Construction Chemicals.
b. Euclid Chemical Company (The); an RPM company.
c. GCP Applied Technologies Inc. (formerly Grace Construction Products).

J. Water: Potable.

2.7 REINFORCEMENT

A. Uncoated-Steel Reinforcing Bars: ASTM A 615/A 615M or ASTM A 996/A 996M, Grade 60.

B. Reinforcing Bar Positioners: Wire units designed to fit into mortar bed joints spanning masonry unit cells and to hold reinforcing bars in center of cells. Units are formed from 0.148-inch steel wire, hot-dip galvanized after fabrication. Provide units designed for number of bars indicated.

1. Manufacturers: Subject to compliance with requirements, available manufacturers offering products that may be incorporated into the Work include, but are not limited to the following:

a. Heckmann Building Products, Inc.
b. Hohmann & Barnard, Inc.
c. Wire-Bond.

C. Masonry-Joint Reinforcement, General: ASTM A 951/A 951M; ASTM A 580.

1. Interior Walls: Mill- galvanized carbon steel.
2. Exterior Walls: Stainless steel, Type 304.
3. Wire Size for Side Rods: 0.148-inch diameter.
4. Wire Size for Cross Rods: 0.148-inch diameter.
5. Wire Size for Veneer Ties: 0.148-inch diameter.
6. Spacing of Cross Rods, Tabs, and Cross Ties: Not more than 16 inches o.c.
7. Provide in lengths of not less than 10 feet, with prefabricated corner and tee units.

D. Masonry-Joint Reinforcement for Single-Wythe Masonry: Ladder or truss type with single pair of side rods.

2.8 TIES AND ANCHORS

A. General: Ties and anchors shall extend at least 1-1/2 inches into veneer but with at least a 5/8-inch cover on outside face.

B. Materials: Provide ties and anchors specified in this article that are made from materials that comply with the following unless otherwise indicated:

1. Interior Walls: Mill-Galvanized, Carbon-Steel Wire: ASTM A 82/A 82M, with ASTM A 641/A 641M, Class 1 coating.
2. Exterior Walls: Stainless steel, Type 304. ASTM A 580.

C. Steel Columns and Beams: Strap anchors (welded or screwed) with triangular ties.

1. “359FH” with “VBT”; Hohman & Barnard.
2. “#315” with “#316”; Heckmann.
3. “DA 207” with “DA 701”; Dur-O-Wal.
4. “1001, Type II” with “1100”; Wire-Bond.

D. Steel Stud with Gypsum Sheathing: Provide Heckmann “#75 Pos-I-Tie” two-piece system as follows:

1. Barrel Section: One-piece screw consisting of stainless steel barrel, washer, flanged head and eye to receive Pos-I-Tie wire tie; designed to seat barrel directly on structural portion of backup, with flanged head covering fastener hole.

   a. Barrel shaft length: 3-1/2 inch, with stainless steel self-drilling screw.
   b. 3/4-inch neoprene washer under flanged head will seal surface penetration of anchor.

2. Wire Tie: Stainless Steel: Type 304.

   a. Thickness: 3/16-inch diameter; ASTM A580.
   b. Shape: Triangular.

E. Control Joint Stabilizers:

1. “Slip-Set Stabilizer”; Hohman & Barnard.
2. “DA 2200”; Dur-O-Wal.
3. “No. 353”; Heckmann.
4. “1700”; Wire Bond.

2.9 EMBEDDED FLASHING MATERIALS

A. Flexible Flashing:

1. Concealed through-wall flashing to direct moisture to the exterior at grade, window and door heads, beneath sills, and other locations.

   a. Flexible Stainless-steel flashing.
   b. Preformed corners and end dams, Flash-Vent SS.

2. Thru-Wall Flashings:

   a. Manufacturers: Subject to compliance with requirements, available manufacturers offering products that may be incorporated into the Work include, but are not limited to, the following:

      1) York Manufacturing, Inc.
      2) STS Coatings, Inc.
      3) Illinois Products, Inc.
      4) TK products, Inc.

5) Hohmann and Barnard; Mighty-Flash.

B. Counterflashings:

1. Provide two-piece counter-flashing where receivers are installed in masonry.
2. Receivers: Provide keyed receivers that extend minimum of 3 inches into wall.
3. Material: Type 302 or 304 stainless steel.
4. Minimum Thickness: 0.015 inch.
5. Caps: provide caps that are minimum of 5 inches long.

C. Application: Unless otherwise indicated, use the following:

1. Where flashing is indicated to receive counterflashing, use metal flashing.
2. Where flashing is indicated to be turned down at or beyond the wall face, use metal flashing.
3. Where flashing is partly exposed and is indicated to terminate at the wall face, use metal flashing with a drip edge.
4. Where flashing is fully concealed, use metal flashing or flexible flashing.

D. Sealants for Sheet Metal Flashings:

1. Elastomeric Sealant: ASTM C 920, chemically curing urethane, polysulfide, or silicone sealant; of type, grade, class, and use classifications required to seal joints in sheet metal flashing and remain watertight.

E. Adhesives, Primers, and Seam Tapes for Flashings: Flashing manufacturer's standard products or products recommended by flashing manufacturer for bonding flashing sheets to each other and to substrates.

F. Termination Bars for Flexible Flashing: Stainless-steel sheet 0.019 inch by 1-1/2 inches with a 3/8-inch sealant flange at top.

2.10 MISCELLANEOUS MASONRY ACCESSORIES

A. Preformed Control-Joint Gaskets: Made from styrene-butadiene-rubber compound, complying with ASTM D 2000, Designation M2AA-805 and designed to fit standard sash block and to maintain lateral stability in masonry wall; size and configuration as indicated.

1. Manufacturers/Products:

a. Dur-O-Wal; “Model DA2001”.
b. Illinois Products Corp; “CJ-S”.
c. Hohmann & Barnard; “RS Series”.

B. Bond-Breaker Strips: Asphalt-saturated felt complying with ASTM D 226/D 226M, Type I (No. 30 asphalt felt).

C. Weep/Cavity Vent Products: Use the following unless otherwise indicated:

1. Cellular Plastic Weep/Vent: One-piece, flexible extrusion made from UV-resistant polypropylene copolymer, full height and width of head joint and depth 1/8 inch less than depth of outer wythe, in color selected from manufacturer's standard.

a. Manufacturers: Subject to compliance with requirements, available manufacturers offering products that may be incorporated into the Work include, but are not limited to the following:

1) Advanced Building Products Inc.
2) Heckmann Building Products, Inc.
3) Hohmann & Barnard, Inc.
4) Wire-Bond.

D. Cavity Drainage Material: Free-draining mesh, made from polymer strands that will not degrade within the wall cavity.

1. Manufacturers: Subject to compliance with requirements, available manufacturers offering products that may be incorporated into the Work include, but are not limited to the following:

a. Advanced Building Products Inc.
b. Hohmann & Barnard, Inc.
c. Mortar Net Solutions.
d. Wire-Bond.

2. High-density polyethylene (HPDE) or nylon strands woven into 90 percent open mesh, 10-inch-high by 1-inch minimum width. Non-reactive to PVC, polystyrene, copper, rubberized asphalt, lead, stainless steel or galvanized metal.

E. Grout Control Screen: High strength, non-corrosive polypropylene polymer monofilament screen, 1/4-inch square openings.

1. Manufacturers/Products:

a. Hohmann & Barnard; “MGS”.
b. Wire-Bond; “Grout Stop #3612”.
c. Dur-O-Wal; “Dur-O-Stop”.

F. Compressible Filler/Thermal Break:

1. Materials/Products:

a. W.R. Meadows; “Ceramar”.
b. Homasote Co; “Homasote”.
c. A.P.S. Supply Company; “A.P.S. Close Cell Poly Foam”.

2. Locations:

a. Between masonry wythes to provide thermal break.
b. Between masonry and steel structure to isolate movement.
c. Where indicated on the Drawings.

2.11 MASONRY CLEANERS

A. Proprietary Acidic Cleaner: Manufacturer's standard-strength cleaner designed for removing mortar/grout stains, efflorescence, and other new construction stains from new masonry without discoloring or damaging masonry surfaces. Use product expressly approved for intended use by cleaner manufacturer and manufacturer of masonry units being cleaned.

2.12 MORTAR AND GROUT MIXES

A. General: Do not use admixtures, including pigments, air-entraining agents, accelerators, retarders, water-repellent agents, antifreeze compounds, or other admixtures unless otherwise indicated.

1. Do not use calcium chloride in mortar or grout.
2. Use portland cement-lime or mortar cement mortar unless otherwise indicated.
3. For exterior masonry, use portland cement-lime or mortar cement mortar.
4. For reinforced masonry, use portland cement-lime or mortar cement mortar.
5. Add cold-weather admixture (if used) at same rate for all mortar that will be exposed to view, regardless of weather conditions, to ensure that mortar color is consistent.

B. Preblended, Dry Mortar Mix: Furnish dry mortar ingredients in form of a preblended mix. Measure quantities by weight to ensure accurate proportions, and thoroughly blend ingredients before delivering to Project site.

C. Mortar for Unit Masonry: Comply with ASTM C 270, Proportion Specification. Provide the following types of mortar for applications stated unless another type is indicated.

1. For masonry below grade or in contact with earth, use Type M.
2. For reinforced masonry, use Type M or Type S.
3. For exterior, above-grade, load-bearing and nonload-bearing walls and parapet walls; for interior load-bearing walls; for interior nonload-bearing partitions; and for other applications where another type is not indicated, use Type N.
4. For interior nonload-bearing partitions, Type O may be used instead of Type N.

D. Pigmented Mortar: Use colored cement product.

1. Mix to match Architect's sample.
2. Application: Use pigmented mortar for exposed mortar joints with the following units:

   a. Decorative CMUs.
   b. Clay face brick.
   c. Cast-stone trim units.

E. Colored-Aggregate Mortar: Produce required mortar color by using colored aggregates and natural color or white cement as necessary to produce required mortar color.

1. Mix to match Architect's sample.
2. Application: Use colored-aggregate mortar for exposed mortar joints with the following units:

   a. Decorative CMUs.
   b. Clay face brick.
   c. Cast-stone trim units.

F. Grout for Unit Masonry: Comply with ASTM C 476.

1. Use grout of type indicated or, if not otherwise indicated, of type (fine or coarse) that will comply with TMS 602/ACI 530.1/ASCE 6 for dimensions of grout spaces and pour height.
2. Proportion grout in accordance with ASTM C 476, Table 1 or paragraph 4.2.2 for specified 28-day compressive strength indicated, but not less than 2000 psi.
3. Provide grout with a slump of 8 to 11 inches as measured according to ASTM C 143/C 143M.

PART 3 - EXECUTION

3.1 EXAMINATION

A. Examine conditions, with Installer present, for compliance with requirements for installation tolerances and other conditions affecting performance of the Work.

1. For the record, prepare written report, endorsed by Installer, listing conditions detrimental to performance of the Work.
2. Verify that foundations are within tolerances specified.
3. Verify that reinforcing dowels are properly placed.
4. Verify that substrates are free of substances that impair mortar bond.

B. Before installation, examine rough-in and built-in construction for piping systems to verify actual locations of piping connections.

C. Proceed with installation only after unsatisfactory conditions have been corrected.

3.2 INSTALLATION, GENERAL

A. Thickness: Build cavity and composite walls and other masonry construction to full thickness shown. Build single-wythe walls to actual widths of masonry units, using units of widths indicated.

B. Build chases and recesses to accommodate items specified in this and other Sections.

C. Leave openings for equipment to be installed before completing masonry. After installing equipment, complete masonry to match construction immediately adjacent to opening.

D. Use full-size units without cutting if possible. If cutting is required to provide a continuous pattern or to fit adjoining construction, cut units with motor-driven saws; provide clean, sharp, unchipped edges. Allow units to dry before laying unless wetting of units is specified. Install cut units with cut surfaces and, where possible, cut edges concealed.

E. Select and arrange units for exposed unit masonry to produce a uniform blend of colors and textures. Mix units from several pallets or cubes as they are placed.

F. Wetting of Brick: Wet brick before laying if initial rate of absorption exceeds 30 g/30 sq. in. per minute when tested according to ASTM C 67. Allow units to absorb water so they are damp but not wet at time of laying.

3.3 TOLERANCES

A. Dimensions and Locations of Elements:

1. For dimensions in cross section or elevation, do not vary by more than plus 1/2 inch or minus 1/4 inch.
2. For location of elements in plan, do not vary from that indicated by more than plus or minus 1/2 inch.
3. For location of elements in elevation, do not vary from that indicated by more than plus or minus 1/4 inch in a story height or 1/2-inch total.

B. Lines and Levels:

1. For bed joints and top surfaces of bearing walls, do not vary from level by more than 1/4 inch in 10 feet, or 1/2-inch maximum.
2. For conspicuous horizontal lines, such as lintels, sills, parapets, and reveals, do not vary from level by more than 1/8 inch in 10 feet, 1/4 inch in 20 feet, or 1/2-inch maximum.
3. For vertical lines and surfaces, do not vary from plumb by more than 1/4 inch in 10 feet, 3/8 inch in 20 feet, or 1/2-inch maximum.
4. For conspicuous vertical lines, such as external corners, door jambs, reveals, and expansion and control joints, do not vary from plumb by more than 1/8 inch in 10 feet, 1/4 inch in 20 feet, or 1/2-inch maximum.
5. For lines and surfaces, do not vary from straight by more than 1/4 inch in 10 feet, 3/8 inch in 20 feet, or 1/2-inch maximum.
6. For vertical alignment of exposed head joints, do not vary from plumb by more than 1/4 inch in 10 feet or 1/2-inch maximum.
7. For faces of adjacent exposed masonry units, do not vary from flush alignment by more than 1/16 inch except due to warpage of masonry units within tolerances specified for warpage of units.

C. Joints:

1. For bed joints, do not vary from thickness indicated by more than plus or minus 1/8 inch, with a maximum thickness limited to 1/2 inch.
2. For exposed bed joints, do not vary from bed-joint thickness of adjacent courses by more than 1/8 inch.
3. For head and collar joints, do not vary from thickness indicated by more than plus 3/8 inch or minus 1/4 inch.
4. For exposed head joints, do not vary from thickness indicated by more than plus or minus 1/8 inch. Do not vary from adjacent bed-joint and head-joint thicknesses by more than 1/8 inch.
5. For exposed bed joints and head joints of stacked bond, do not vary from a straight line by more than 1/16 inch from one masonry unit to the next.

3.4 LAYING MASONRY WALLS

A. Lay out walls in advance for accurate spacing of surface bond patterns with uniform joint thicknesses and for accurate location of openings, movement-type joints, returns, and offsets. Avoid using less-than-half-size units, particularly at corners, jambs, and, where possible, at other locations.

B. Bond Pattern for Exposed Masonry: Unless otherwise indicated, lay exposed masonry in running bond; do not use units with less-than-nominal 4-inch horizontal face dimensions at corners or jambs.

C. Lay concealed masonry with all units in a wythe in running bond or bonded by lapping not less than 2 inches. Bond and interlock each course of each wythe at corners. Do not use units with less-than-nominal 4-inch horizontal face dimensions at corners or jambs.

D. Stopping and Resuming Work: Stop work by stepping back units in each course from those in course below; do not tooth. When resuming work, clean masonry surfaces that are to receive mortar, remove loose masonry units and mortar, and wet brick if required before laying fresh masonry.

E. Built-in Work: As construction progresses, build in items specified in this and other Sections. Fill in solidly with masonry around built-in items.

F. Fill space between steel frames and masonry solidly with mortar unless otherwise indicated.

G. Where built-in items are to be embedded in cores of hollow masonry units, place a layer of metal lath, wire mesh, or plastic mesh in the joint below, and rod mortar or grout into core.

H. Fill cores in hollow CMUs with grout 24 inches under bearing plates, beams, lintels, posts, and similar items unless otherwise indicated.

I. Build nonload-bearing interior partitions full height of story to underside of solid floor or roof structure above unless otherwise indicated.

1. Install compressible filler in joint between top of partition and underside of structure above.
2. At fire-rated partitions, treat joint between top of partition and underside of structure above to comply with Section 078443 "Joint Firestopping."

3.5 MORTAR BEDDING AND JOINTING

A. Lay CMUs as follows:

1. Bed face shells in mortar and make head joints of depth equal to bed joints.
2. Bed webs in mortar in all courses of piers, columns, and pilasters.
3. Bed webs in mortar in grouted masonry, including starting course on footings.
4. Fully bed entire units, including areas under cells, at starting course on footings where cells are not grouted.
5. Fully bed units and fill cells with mortar at anchors and ties as needed to fully embed anchors and ties in mortar.

B. Lay solid masonry units with completely filled bed and head joints; butter ends with sufficient mortar to fill head joints and shove into place. Do not deeply furrow bed joints or slush head joints.

C. Set cast-stone trim units in full bed of mortar with full vertical joints. Fill dowel, anchor, and similar holes.

1. Clean soiled surfaces with fiber brush and soap powder and rinse thoroughly with clear water.
2. Wet joint surfaces thoroughly before applying mortar.
3. Rake out mortar joints for pointing with sealant.

D. Tool exposed joints slightly concave when thumbprint hard, using a jointer larger than joint thickness unless otherwise indicated.

1. For glazed masonry units, use a nonmetallic jointer 3/4 inch or more in width.

E. Cut joints flush for masonry walls to receive plaster or other direct-applied finishes (other than paint) unless otherwise indicated.

3.6 CAVITY WALLS

A. Bond wythes of cavity walls together using bonding system indicated on Drawings.

B. Keep cavities clean of mortar droppings and other materials during construction. Bevel beds away from cavity, to minimize mortar protrusions into cavity. Do not attempt to trowel or remove mortar fins protruding into cavity.

C. Installing Cavity Wall Insulation: Place small dabs of adhesive, spaced approximately 12 inches o.c. both ways, on inside face of insulation boards, or attach with plastic fasteners designed for this purpose. Fit courses of insulation between wall ties and other confining obstructions in cavity, with edges butted tightly both ways. Press units firmly against inside wythe of masonry or other construction as shown.

1. Fill cracks and open gaps in insulation with crack sealer compatible with insulation and masonry.

3.7 ANCHORED MASONRY VENEERS

A. Anchor masonry veneers to wall framing and concrete and masonry backup with masonry-veneer anchors to comply with the following requirements:

1. Fasten screw-attached anchors through sheathing to wall framing and to concrete and masonry backup with metal fasteners of type indicated. Use two fasteners unless anchor design only uses one fastener.
2. Embed tie sections in masonry joints.
3. Locate anchor sections to allow maximum vertical differential movement of ties up and down.
4. Space anchors as indicated.

B. Provide not less than 2 inches of airspace between back of masonry veneer and face of sheathing.

1. Keep airspace clean of mortar droppings and other materials during construction. Bevel beds away from airspace, to minimize mortar protrusions into airspace. Do not attempt to trowel or remove mortar fins protruding into airspace.

3.8 MASONRY-JOINT REINFORCEMENT

A. General: Install entire length of longitudinal side rods in mortar with a minimum cover of 5/8 inch on exterior side of walls, 1/2 inch elsewhere. Lap reinforcement a minimum of 6 inches.

B. Interrupt joint reinforcement at control and expansion joints unless otherwise indicated.

C. Provide continuity at wall intersections by using prefabricated T-shaped units.

D. Cut and bend reinforcing units as directed by manufacturer for continuity at corners, returns, offsets, column fireproofing, pipe enclosures, and other special conditions.

3.9 ANCHORING MASONRY TO STRUCTURAL STEEL AND CONCRETE

A. Anchor masonry to structural steel and concrete, where masonry abuts or faces structural steel or concrete, to comply with the following:

1. Provide an open space not less than 2 inches wide between masonry and structural steel or concrete unless otherwise indicated. Keep open space free of mortar and other rigid materials.
2. Anchor masonry with anchors embedded in masonry joints and attached to structure.
3. Space anchors as indicated, but not more than 24 inches o.c. vertically and 36 inches o.c. horizontally.

3.10 CONTROL JOINTS

A. General: Install control- and expansion-joint materials in unit masonry as masonry progresses. Do not allow materials to span control and expansion joints without provision to allow for in-plane wall or partition movement.

B. Provide control joints in the exterior Veneer where shown on the Drawings.

C. If control joints are not shown on the Drawings; provide control joints in the following locations:

1. Exterior Clay Masonry Veneer: Within 5 feet of exterior corners and not more than 22’-8” on center.
2. Interior Masonry: 30 feet on center, to divide large wall areas.
3. Final location of control joints not shown on the Drawing shall be verified with the Architect.

D. Provide expansion joints where shown on the Drawings to coincide with the Building expansion joint lines.

E. Do not continue horizontal joint reinforcement through control or expansion joints.

F. Install preformed control joint device in continuous lengths. Seal butt and corner joints in accordance with manufacturer's instructions.

G. Size control joint in accordance with Section 079200 for sealant performance.

3.11 FLASHING, WEEP HOLES, AND CAVITY VENTS

A. General: Install embedded flashing and weep holes in masonry at shelf angles, lintels, ledges, other obstructions to downward flow of water in wall, and where indicated. Install cavity vents at shelf angles, ledges, and other obstructions to upward flow of air in cavities, and where indicated.

B. Install flashing as follows unless otherwise indicated:

1. Prepare masonry surfaces so they are smooth and free from projections that could puncture flashing. Where flashing is within mortar joint, place through-wall flashing on sloping bed of mortar and cover with mortar. Before covering with mortar, seal penetrations in flashing with adhesive, sealant, or tape as recommended by flashing manufacturer.

2. At masonry-veneer walls, extend flashing through veneer, across airspace behind veneer, and up face of sheathing at least 8 inches. Fasten upper edge of flexible flashing to sheathing through termination bar.
3. At lintels and shelf angles, extend flashing a minimum of 6 inches into masonry at each end. At heads and sills, extend flashing 6 inches at ends and turn up not less than 2 inches to form end dams.
4. Install metal drip edges beneath flexible flashing at exterior face of wall. Stop flexible flashing 1/2 inch back from outside face of wall, and adhere flexible flashing to top of metal drip edge.

C. Install reglets and nailers for flashing and other related construction where they are shown to be built into masonry.

D. Install weep holes in exterior wythes and veneers in head joints of first course of masonry immediately above embedded flashing.

1. Use specified weep/cavity vent products to form weep holes.
2. Space weep holes 24 inches o.c. unless otherwise indicated.

E. Place cavity drainage material in airspace behind veneers to comply with configuration requirements for cavity drainage material in "Miscellaneous Masonry Accessories" Article.

F. Install cavity vents in head joints in exterior wythes at spacing indicated. Use specified weep/cavity vent products to form cavity vents.

1. Close cavities off vertically and horizontally with blocking in manner indicated. Install through-wall flashing and weep holes above horizontal blocking.

3.12 REINFORCED UNIT MASONRY INSTALLATION

A. Placing Reinforcement: Comply with requirements in TMS 602/ACI 530.1/ASCE 6.

B. Grouting: Do not place grout until entire height of masonry to be grouted has attained enough strength to resist grout pressure.

1. Comply with requirements in TMS 602/ACI 530.1/ASCE 6 for cleanouts and for grout placement, including minimum grout space and maximum pour height.
2. Limit height of vertical grout pours to not more than 48 inches.

3.13 FIELD QUALITY CONTROL

A. Testing and Inspecting: Owner will engage special inspectors to perform tests and inspections and prepare reports. Allow inspectors access to scaffolding and work areas as needed to perform tests and inspections. Retesting of materials that fail to comply with specified requirements shall be done at Contractor's expense.

B. Inspections: Special inspections according to Level B in TMS 402/ACI 530/ASCE 5.

C. Testing Prior to Construction: One set of tests.

D. Testing Frequency: One set of tests for each 5000-sq. ft. of wall area or portion thereof.

E. Clay Masonry Unit Test: For each type of unit provided, according to ASTM C 67 for compressive strength.

F. Concrete Masonry Unit Test: For each type of unit provided, according to ASTM C 140 for compressive strength.

G. Mortar Test (Property Specification): For each mix provided, according to ASTM C 780. Test mortar for mortar air content and compressive strength.

H. Grout Test (Compressive Strength): For each mix provided, according to ASTM C 1019.

3.14 REPAIRING, POINTING, AND CLEANING

A. Remove and replace masonry units that are loose, chipped, broken, stained, or otherwise damaged or that do not match adjoining units. Install new units to match adjoining units; install in fresh mortar, pointed to eliminate evidence of replacement.

B. Pointing: During the tooling of joints, enlarge voids and holes, except weep holes, and completely fill with mortar. Point up joints, including corners, openings, and adjacent construction, to provide a neat, uniform appearance. Prepare joints for sealant application, where indicated.

C. In-Progress Cleaning: Clean unit masonry as work progresses by dry brushing to remove mortar fins and smears before tooling joints.

D. Final Cleaning: After mortar is thoroughly set and cured, clean exposed masonry as follows:

1. Remove large mortar particles by hand with wooden paddles and nonmetallic scrape hoes or chisels.
2. Test cleaning methods on sample wall panel; leave one-half of panel uncleaned for comparison purposes. Obtain Architect's approval of sample cleaning before proceeding with cleaning of masonry.
3. Protect adjacent stone and nonmasonry surfaces from contact with cleaner by covering them with liquid strippable masking agent or polyethylene film and waterproof masking tape.
4. Wet wall surfaces with water before applying cleaners; remove cleaners promptly by rinsing surfaces thoroughly with clear water.
5. Clean brick by bucket-and-brush hand-cleaning method described in BIA Technical Notes 20.
6. Clean concrete masonry by applicable cleaning methods indicated in NCMA TEK 8-4A.
7. Clean stone trim to comply with stone supplier's written instructions.

3.15 MASONRY WASTE DISPOSAL

A. Salvageable Materials: Unless otherwise indicated, excess masonry materials are Contractor's property. At completion of unit masonry work, remove from Project site.

END OF SECTION

SECTION 051200

STRUCTURAL STEEL FRAMING

PART 1 - GENERAL

1.1 RELATED DOCUMENTS

A. Drawings and general provisions of the Contract, including General and Supplementary Conditions and Division 01 Specification Sections, apply to this Section.

1.2 SUMMARY

A. Section Includes:

1. Structural steel.
2. Prefabricated building columns.
3. Field-installed shear connectors.
4. Grout.

1.3 DEFINITIONS

A. Structural Steel: Elements of the structural frame indicated on Drawings and as described in AISC 303, "Code of Standard Practice for Steel Buildings and Bridges."

1.4 COORDINATION

A. Coordinate selection of shop primers with topcoats to be applied over them. Comply with paint and coating manufacturers' written recommendations to ensure that shop primers and topcoats are compatible with one another.

B. Coordinate installation of anchorage items to be embedded in or attached to other construction without delaying the Work. Provide setting diagrams, sheet metal templates, instructions, and directions for installation.

1.5 PREINSTALLATION MEETINGS

A. Preinstallation Conference: Conduct conference at Project site.

1.6 ACTION SUBMITTALS

A. Product Data: For each type of product.

B. Shop Drawings: Show fabrication of structural-steel components.

1. Include details of cuts, connections, splices, camber, holes, and other pertinent data.
2. Include embedment Drawings.

3. Indicate welds by standard AWS symbols, distinguishing between shop and field welds, and show size, length, and type of each weld. Show backing bars that are to be removed and supplemental fillet welds where backing bars are to remain.
4. Indicate type, size, and length of bolts, distinguishing between shop and field bolts. Identify pretensioned and slip-critical, high-strength bolted connections.

C. Delegated-Design Submittal: For structural-steel connections indicated to comply with design loads, include analysis data signed and sealed by the qualified professional engineer responsible for their preparation.

1.7 INFORMATIONAL SUBMITTALS

A. Qualification Data: For Installer and fabricator.

B. Welding certificates.

C. Mill test reports for structural steel, including chemical and physical properties.

D. Product Test Reports: For the following:

1. Bolts, nuts, and washers including mechanical properties and chemical analysis.
2. Direct-tension indicators.
3. Tension-control, high-strength, bolt-nut-washer assemblies.
4. Shear stud connectors.
5. Shop primers.
6. Nonshrink grout.

1.8 QUALITY ASSURANCE

A. Fabricator Qualifications: A qualified fabricator that participates in the AISC Quality Certification Program and is designated an AISC-Certified Plant, Category STD.

B. Installer Qualifications: A qualified installer who participates in the AISC Quality Certification Program and is designated an AISC-Certified Erector.

C. Comply with applicable provisions of the following specifications and documents:

1. AISC 303.
2. AISC 341 and AISC 341s1.
3. AISC 360.
4. RCSC's "Specification for Structural Joints Using ASTM A 325 or A 490 Bolts."

1.9 DELIVERY, STORAGE, AND HANDLING

A. Store materials to permit easy access for inspection and identification. Keep steel members off ground and spaced by using pallets, dunnage, or other supports and spacers. Protect steel members and packaged materials from corrosion and deterioration.

1. Do not store materials on structure in a manner that might cause distortion, damage, or overload to members or supporting structures. Repair or replace damaged materials or structures as directed.

B. Store fasteners in a protected place in sealed containers with manufacturer's labels intact.

1. Fasteners may be repackaged provided Owner's testing and inspecting agency observes repackaging and seals containers.
2. Clean and relubricate bolts and nuts that become dry or rusty before use.
3. Comply with manufacturers' written recommendations for cleaning and lubricating ASTM F 1852 fasteners and for retesting fasteners after lubrication.

PART 2 - PRODUCTS

2.1 PERFORMANCE REQUIREMENTS

A. Connections: Provide details of simple shear connections required by the Contract Documents to be selected or completed by structural-steel fabricator, including comprehensive engineering analysis by a qualified professional engineer, to withstand loads indicated and comply with other information and restrictions indicated.

1. Select and complete connections using schematic details indicated and AISC 360.
2. Use Allowable Stress Design; data are given at service-load level.

B. Moment Connections: Type FR, fully restrained.

C. Construction: Combined system of moment frame, braced frame, and shear walls.

2.2 STRUCTURAL-STEEL MATERIALS

A. W-Shapes: ASTM A 992/A 992M.

B. Channels, Angles, M-Shapes: ASTM A 36/A 36M.

C. Plate and Bar: ASTM A 36/A 36M or ASTM A 572/A 572M, Grade 50, as required.

D. Cold-Formed Hollow Structural Sections: ASTM A 500/A 500M, Grade C, structural tubing.

E. Steel Pipe: ASTM A 53/A 53M, Type E or Type S, Grade B.

F. Welding Electrodes: Comply with AWS requirements.

2.3 BOLTS, CONNECTORS, AND ANCHORS

A. High-Strength Bolts, Nuts, and Washers: ASTM A 325, Type 1, heavy-hex steel structural bolts; ASTM A 563, Grade C, heavy-hex carbon-steel nuts; and ASTM F 436, Type 1, hardened carbon-steel washers; all with plain finish.

1. Direct-Tension Indicators: ASTM F 959, Type 325, compressible-washer type with plain finish.

B. Zinc-Coated High-Strength Bolts, Nuts, and Washers: ASTM A 325, Type 1, heavy-hex steel structural bolts; ASTM A 563, Grade DH heavy-hex carbon-steel nuts; and ASTM F 436, Type 1, hardened carbon-steel washers.

1. Finish: Hot-dip zinc coating.

C. Tension-Control, High-Strength Bolt-Nut-Washer Assemblies: ASTM F 1852, Type 1, heavy-hex head assemblies consisting of steel structural bolts with splined ends, heavy-hex carbon-steel nuts, and hardened carbon-steel washers.

1. Finish: Plain.

D. Shear Connectors: ASTM A 108, Grades 1015 through 1020, headed-stud type, cold-finished carbon steel; AWS D1.1/D1.1M, Type B.

E. Unheaded Anchor Rods: ASTM F 1554, Grade 36.

1. Configuration: Straight.
2. Nuts: ASTM A 563 heavy-hex carbon steel.
3. Plate Washers: ASTM A 36/A 36M carbon steel.
4. Washers: ASTM F 436, Type 1, hardened carbon steel.
5. Finish: Plain or Hot-dip zinc coating, ASTM A 153/A 153M, Class C.

2.4 PRIMER

A. Primer: Fabricator's standard lead- and chromate-free, nonasphaltic, rust-inhibiting primer complying with MPI#79 and compatible with topcoat, and shall be VOC compliant.

B. Galvanizing Repair Paint: MPI#18, MPI#19, or SSPC-Paint 20.

2.5 GROUT

A. Metallic, Shrinkage-Resistant Grout: ASTM C 1107/C 1107M, factory-packaged, metallic aggregate grout, mixed with water to consistency suitable for application and a 30-minute working time.

B. Nonmetallic, Shrinkage-Resistant Grout: ASTM C 1107/C 1107M, factory-packaged, nonmetallic aggregate grout, noncorrosive and nonstaining, mixed with water to consistency suitable for application and a 30-minute working time.

2.6 FABRICATION

A. Structural Steel: Fabricate and assemble in shop to greatest extent possible. Fabricate according to AISC 303, "Code of Standard Practice for Steel Buildings and Bridges," and to AISC 360.

1. Camber structural-steel members where indicated.
2. Fabricate beams with rolling camber up.
3. Identify high-strength structural steel according to ASTM A 6/A 6M and maintain markings until structural steel has been erected.
4. Mark and match-mark materials for field assembly.
5. Complete structural-steel assemblies, including welding of units, before starting shop-priming operations.

B. Thermal Cutting: Perform thermal cutting by machine to greatest extent possible.

1. Plane thermally cut edges to be welded to comply with requirements in AWS D1.1/D1.1M.

C. Bolt Holes: Cut, drill,or punch standard bolt holes perpendicular to metal surfaces.

D. Finishing: Accurately finish ends of columns and other members transmitting bearing loads.

E. Cleaning: Clean and prepare steel surfaces that are to remain unpainted according to SSPC-SP 2, "Hand Tool Cleaning."

F. Shear Connectors: Prepare steel surfaces as recommended by manufacturer of shear connectors. Use automatic end welding of headed-stud shear connectors according to AWS D1.1/D1.1M and manufacturer's written instructions.

G. Holes: Provide holes required for securing other work to structural steel and for other work to pass through steel members.

1. Cut, drill, or punch holes perpendicular to steel surfaces. Do not thermally cut bolt holes or enlarge holes by burning.
2. Baseplate Holes: Cut, drill, mechanically thermal cut, or punch holes perpendicular to steel surfaces.
3. Weld threaded nuts to framing and other specialty items indicated to receive other work.

2.7 SHOP CONNECTIONS

A. High-Strength Bolts: Shop install high-strength bolts according to RCSC's "Specification for Structural Joints Using ASTM A 325 or A 490 Bolts" for type of bolt and type of joint specified.

1. Joint Type: Snug tightened.

B. Weld Connections: Comply with AWS D1.1/D1.1M for tolerances, appearances, welding procedure specifications, weld quality, and methods used in correcting welding work.

1. Assemble and weld built-up sections by methods that maintain true alignment of axes without exceeding tolerances in AISC 303 for mill material.

2.8 SHOP PRIMING

A. Shop prime steel surfaces except the following:

1. Surfaces embedded in concrete or mortar. Extend priming of partially embedded members to a depth of 2 inches.
2. Surfaces to be field welded.
3. Surfaces of high-strength bolted, slip-critical connections.
4. Surfaces to receive sprayed fire-resistive materials (applied fireproofing).
5. Galvanized surfaces.

B. Surface Preparation: Clean surfaces to be painted. Remove loose rust and mill scale and spatter, slag, or flux deposits. Prepare surfaces according to the following specifications and standards:

1. SSPC-SP 2, "Hand Tool Cleaning."

C. Priming: Immediately after surface preparation, apply primer according to manufacturer's written instructions and at rate recommended by SSPC to provide a minimum dry film thickness of 1.5 mils. Use priming methods that result in full coverage of joints, corners, edges, and exposed surfaces.

1. Stripe paint corners, crevices, bolts, welds, and sharp edges.
2. Apply two coats of shop paint to surfaces that are inaccessible after assembly or erection. Change color of second coat to distinguish it from first.

D. Painting: Prepare steel and apply a one-coat, nonasphaltic primer complying with SSPC-PS Guide 7.00, "Painting System Guide 7.00: Guide for Selecting One-Coat Shop Painting Systems," to provide a dry film thickness of not less than 1.5 mils.

2.9 GALVANIZING

A. Hot-Dip Galvanized Finish: Apply zinc coating by the hot-dip process to structural steel according to ASTM A 123/A 123M.

1. Fill vent and drain holes that are exposed in the finished Work unless they function as weep holes, by plugging with zinc solder and filing off smooth.
2. Galvanize lintels and shelf angles attached to structural-steel frame and located in exterior walls.

2.10 SOURCE QUALITY CONTROL

A. Testing Agency: Owner will engage a qualified testing agency to perform shop tests and inspections.

1. Provide testing agency with access to places where structural-steel work is being fabricated or produced to perform tests and inspections.

B. Bolted Connections: Inspect and test shop-bolted connections according to RCSC's "Specification for Structural Joints Using ASTM A 325 or A 490 Bolts."

C. Welded Connections: Owner’s testing agency will visually inspect shop-welded connections according to AWS D1.1/D1.1M and the following inspection procedures, at testing agency's option:

1. Liquid Penetrant Inspection: ASTM E 165.
2. Magnetic Particle Inspection: ASTM E 709; performed on root pass and on finished weld. Cracks or zones of incomplete fusion or penetration are not accepted.
3. Ultrasonic Inspection: ASTM E 164.
4. Radiographic Inspection: ASTM E 94.

D. Owner’s testing agency will test and inspect shop-welded shear connectors according to requirements in AWS D1.1/D1.1M for stud welding and as follows:

1. Perform bend tests if visual inspections reveal either a less-than-continuous 360-degree flash or welding repairs to any shear connector.
2. Conduct tests according to requirements in AWS D1.1/D1.1M on additional shear connectors if weld fracture occurs on shear connectors already tested.

PART 3 - EXECUTION

3.1 EXAMINATION

A. Verify, with certified steel erector present, elevations of concrete- and masonry-bearing surfaces and locations of anchor rods, bearing plates, and other embedments for compliance with requirements.

1. Prepare a certified survey of existing conditions. Include bearing surfaces, anchor rods, bearing plates, and other embedments showing dimensions, locations, angles, and elevations.

B. Proceed with installation only after unsatisfactory conditions have been corrected.

3.2 PREPARATION

A. Provide temporary shores, guys, braces, and other supports during erection to keep structural steel secure, plumb, and in alignment against temporary construction loads and loads equal in intensity to design loads. Remove temporary supports when permanent structural steel, connections, and bracing are in place unless otherwise indicated.

1. Do not remove temporary shoring supporting composite deck construction until cast-in-place concrete has attained its design compressive strength.

3.3 ERECTION

A. Set structural steel accurately in locations and to elevations indicated and according to AISC 303 and AISC 360.

B. Baseplates Bearing Plates and Leveling Plates: Clean concrete- and masonry-bearing surfaces of bond-reducing materials, and roughen surfaces prior to setting plates. Clean bottom surface of plates.

1. Set plates for structural members on wedges, shims, or setting nuts as required.
2. Weld plate washers to top of baseplate.
3. Snug-tighten anchor rods after supported members have been positioned and plumbed. Do not remove wedges or shims but, if protruding, cut off flush with edge of plate before packing with grout.
4. Promptly pack grout solidly between bearing surfaces and plates so no voids remain. Neatly finish exposed surfaces; protect grout and allow to cure. Comply with manufacturer's written installation instructions for shrinkage-resistant grouts.

C. Maintain erection tolerances of structural steel within AISC 303, "Code of Standard Practice for Steel Buildings and Bridges."

D. Align and adjust various members that form part of complete frame or structure before permanently fastening. Before assembly, clean bearing surfaces and other surfaces that are in permanent contact with members. Perform necessary adjustments to compensate for discrepancies in elevations and alignment.

1. Level and plumb individual members of structure.

2. Make allowances for difference between temperature at time of erection and mean temperature when structure is completed and in service.

E. Splice members only where indicated.

F. Do not use thermal cutting during erection unless approved by Architect.

G. Do not enlarge unfair holes in members by burning or using drift pins. Ream holes that must be enlarged to admit bolts.

H. Shear Connectors: Prepare steel surfaces as recommended by manufacturer of shear connectors. Use automatic end welding of headed-stud shear connectors according to AWS D1.1/D1.1M and manufacturer's written instructions.

3.4 FIELD CONNECTIONS

A. High-Strength Bolts: Install high-strength bolts according to RCSC's "Specification for Structural Joints Using ASTM A 325 or A 490 Bolts" for type of bolt and type of joint specified.

1. Joint Type: Snug tightened unless noted otherwise.

B. Weld Connections: Comply with AWS D1.1/D1.1M for tolerances, appearances, welding procedure specifications, weld quality, and methods used in correcting welding work.

1. Comply with AISC 303 and AISC 360 for bearing, alignment, adequacy of temporary connections, and removal of paint on surfaces adjacent to field welds.
2. Remove backing bars or runoff tabs where indicated, back gouge, and grind steel smooth.
3. Assemble and weld built-up sections by methods that maintain true alignment of axes without exceeding tolerances in AISC 303, "Code of Standard Practice for Steel Buildings and Bridges," for mill material.

3.5 PREFABRICATED BUILDING COLUMNS

A. Install prefabricated building columns to comply with AISC 360, manufacturer's written recommendations, and requirements of testing and inspecting agency that apply to the fire-resistance rating indicated.

3.6 FIELD QUALITY CONTROL

A. Special Inspections: Owner will engage a qualified special inspector to perform the following special inspections:

1. Verify structural-steel materials and inspect steel frame joint details.
2. Verify weld materials and inspect welds.
3. Verify connection materials and inspect high-strength bolted connections.

B. Testing Agency: Owner will engage a qualified testing agency to perform tests and inspections.

C. Bolted Connections: Inspect and test bolted connections according to RCSC's "Specification for Structural Joints Using ASTM A 325 or A 490 Bolts."

D. Welded Connections: Visually inspect field welds according to AWS D1.1/D1.1M.

1. In addition to visual inspection, test and inspect field welds according to AWS D1.1/D1.1M and the following inspection procedures, at testing agency's option:

a. Liquid Penetrant Inspection: ASTM E 165.
b. Magnetic Particle Inspection: ASTM E 709; performed on root pass and on finished weld. Cracks or zones of incomplete fusion or penetration are not accepted.
c. Ultrasonic Inspection: ASTM E 164.
d. Radiographic Inspection: ASTM E 94.

E. In addition to visual inspection, test and inspect field-welded shear connectors according to requirements in AWS D1.1/D1.1M for stud welding and as follows:

1. Perform bend tests if visual inspections reveal either a less-than-continuous 360-degree flash or welding repairs to any shear connector.
2. Conduct tests according to requirements in AWS D1.1/D1.1M on additional shear connectors if weld fracture occurs on shear connectors already tested.

3.7 REPAIRS AND PROTECTION

A. Galvanized Surfaces: Clean areas where galvanizing is damaged or missing and repair galvanizing to comply with ASTM A 780/A 780M.

B. Touchup Painting: Immediately after erection, clean exposed areas where primer is damaged or missing and paint with the same material as used for shop painting to comply with SSPC-PA 1 for touching up shop-painted surfaces.

1. Clean and prepare surfaces by SSPC-SP 2 hand-tool cleaning or SSPC-SP 3 power-tool cleaning.

END OF SECTION

SECTION 052100

STEEL JOIST FRAMING

PART 1 - GENERAL

1.1 RELATED DOCUMENTS

A. Drawings and general provisions of the Contract, including General and Supplementary Conditions and Division 01 Specification Sections, apply to this Section.

1.2 SUMMARY

A. Section Includes:

1. K-series steel joists.
2. KCS-type K-series steel joists.
3. K-series steel joist substitutes.
4. LH- and DLH-series long-span steel joists.

1.3 DEFINITIONS

A. SJI's "Specifications": Steel Joist Institute's "Standard Specifications, Load Tables and Weight Tables for Steel Joists and Joist Girders."

B. Special Joists: Steel joists or joist girders requiring modification by manufacturer to support nonuniform, unequal, or special loading conditions that invalidate load tables in SJI's "Specifications."

1.4 ACTION SUBMITTALS

A. Product Data: For each type of joist, accessory, and product.

B. Shop Drawings:

1. Include layout, designation, number, type, location, and spacing of joists.
2. Include joining and anchorage details; bracing, bridging, and joist accessories; splice and connection locations and details; and attachments to other construction.

1.5 INFORMATIONAL SUBMITTALS

A. Qualification Data: For manufacturer and professional engineer.

B. Manufacturer certificates.

1.6 QUALITY ASSURANCE

A. Manufacturer Qualifications: A manufacturer certified by SJI to manufacture joists complying with applicable standard specifications and load tables in SJI's "Specifications."

1. Manufacturer's responsibilities include providing professional engineering services for designing special joists to comply with performance requirements.

B. Welding Qualifications: Qualify field-welding procedures and personnel according to AWS D1.1/D1.1M, "Structural Welding Code - Steel."

1.7 DELIVERY, STORAGE, AND HANDLING

A. Deliver, store, and handle joists as recommended in SJI's "Specifications."

B. Protect joists from corrosion, deformation, and other damage during delivery, storage, and handling.

1.8 SEQUENCING

A. Deliver steel bearing plates to be built into masonry construction.

PART 2 - PRODUCTS

2.1 MANUFACTURERS

A. Manufacturers: Subject to compliance with requirements, available manufacturers offering products that may be incorporated into the Work include, but are not limited to the following:

1. Canam Steel Corporation; Canam Group, Inc.
2. New Millennium Building Systems, LLC.
3. Valley Joist.
4. Vulcraft; Nucor Vulcraft Group.

2.2 PERFORMANCE REQUIREMENTS

A. Structural Performance: Provide special joists and connections capable of withstanding design loads indicated.

1. Use ASD; data are given at service-load level.
2. Design special joists to withstand design loads with live-load deflections no greater than the following:

a. Floor Joists: Vertical deflection of 1/360 of the span.
b. Roof Joists: Vertical deflection of 1/360 of the span.

2.3 K-SERIES STEEL JOISTS

A. Manufacture steel joists of type indicated according to "Standard Specification for Open Web Steel Joists, K-Series" in SJI's "Specifications," with steel-angle top- and bottom-chord members, underslung ends, and parallel top chord.

1. Joist Type: K-series steel joists and KCS-type K-series steel joists.

B. Steel Joist Substitutes: Manufacture according to "Standard Specifications for Open Web Steel Joists, K-Series" in SJI's "Specifications," with steel-angle or -channel members.

C. Provide holes in chord members for connecting and securing other construction to joists.

D. Top-Chord Extensions: Extend top chords of joists with SJI's Type S top-chord extensions where indicated, complying with SJI's "Specifications."

E. Extended Ends: Extend bearing ends of joists with SJI's Type R extended ends where indicated, complying with SJI's "Specifications."

F. Camber joists according to SJI's "Specifications.".

G. Equip bearing ends of joists with manufacturer's standard beveled ends or sloped shoes if joist slope exceeds 1/4 inch per 12 inches.

2.4 LONG-SPAN STEEL JOISTS

A. Manufacture steel joists according to "Standard Specification for Longspan Steel Joists, LH-Series and Deep Longspan Steel Joists, DLH-Series" in SJI's "Specifications," with steel-angle top- and bottom-chord members; of joist type and end and top-chord arrangements as follows:

1. Joist Type: LH-series steel joists.
2. End Arrangement: Nonstandard gable shape.

B. Provide holes in chord members for connecting and securing other construction to joists.

C. Camber long-span steel joists according to SJI's "Specifications."

2.5 PRIMERS

A. Primer: SSPC-Paint 15, or manufacturer's standard shop primer complying with performance requirements in SSPC-Paint 15.

2.6 JOIST ACCESSORIES

A. Bridging: Provide bridging anchors and number of rows of horizontal or diagonal bridging of material, size, and type required by SJI's "Specifications" for type of joist, chord size, spacing, and span. Furnish additional erection bridging if required for stability.

B. Steel bearing plates with integral anchorages are specified in Section 055000 "Metal Fabrications."

C. Furnish ceiling extensions, either extended bottom-chord elements or a separate extension unit of enough strength to support ceiling construction. Extend ends to within 1/2 inch of finished wall surface unless otherwise indicated.

1. Finish: Plain, uncoated.

D. High-Strength Bolts, Nuts, and Washers: ASTM A 325, Type 1, heavy hex steel structural bolts; ASTM A 563 heavy hex carbon-steel nuts; and ASTM F 436 hardened carbon-steel washers.

1. Finish: Plain.

E. Welding Electrodes: Comply with AWS standards.

F. Furnish miscellaneous accessories including splice plates and bolts required by joist manufacturer to complete joist assembly.

2.7 CLEANING AND SHOP PAINTING

A. Clean and remove loose scale, heavy rust, and other foreign materials from fabricated joists and accessories by hand-tool cleaning, SSPC-SP 2.

B. Apply one coat of shop primer to joists and joist accessories to be primed to provide a continuous, dry paint film not less than 1 mil thick.

C. Shop priming of joists and joist accessories is specified in Section 099123 "Interior Painting."

PART 3 - EXECUTION

3.1 EXAMINATION

A. Examine supporting substrates, embedded bearing plates, and abutting structural framing for compliance with requirements for installation tolerances and other conditions affecting performance of the Work.

B. Proceed with installation only after unsatisfactory conditions have been corrected.

3.2 INSTALLATION

A. Do not install joists until supporting construction is in place and secured.

B. Install joists and accessories plumb, square, and true to line; securely fasten to supporting construction according to SJI's "Specifications," joist manufacturer's written instructions, and requirements in this Section.

1. Before installation, splice joists delivered to Project site in more than one piece.
2. Space, adjust, and align joists accurately in location before permanently fastening.
3. Install temporary bracing and erection bridging, connections, and anchors to ensure that joists are stabilized during construction.

C. Field weld joists to supporting steel bearing plates and framework. Coordinate welding sequence and procedure with placement of joists. Comply with AWS requirements and

procedures for welding, appearance and quality of welds, and methods used in correcting welding work.

D. Bolt joists to supporting steel framework using carbon-steel bolts as required.

E. Install and connect bridging concurrently with joist erection, before construction loads are applied. Anchor ends of bridging lines at top and bottom chords if terminating at walls or beams.

3.3 FIELD QUALITY CONTROL

A. Testing Agency: Owner will engage a qualified testing agency to perform tests and inspections.

B. Visually inspect field welds according to AWS D1.1/D1.1M.

1. In addition to visual inspection, test field welds according to AWS D1.1/D1.1M and the following procedures, at testing agency's option:

a. Liquid Penetrant Inspection: ASTM E 165/E 165M.
b. Magnetic Particle Inspection: ASTM E 709.
c. Ultrasonic Testing: ASTM E 164.
d. Radiographic Testing: ASTM E 94.

C. Visually inspect bolted connections.

D. Prepare test and inspection reports.

3.4 PROTECTION

A. Repair damaged galvanized coatings on galvanized items with galvanized repair paint according to ASTM A 780/A 780M and manufacturer's written instructions.

B. Touchup Painting: After installation, promptly clean, prepare, and prime or reprime field connections, rust spots, and abraded surfaces of prime-painted joists, bearing plates, abutting structural steel, and accessories.

1. Clean and prepare surfaces by hand-tool cleaning according to SSPC-SP 2 or power-tool cleaning according to SSPC-SP 3.
2. Apply a compatible primer of same type as primer used on adjacent surfaces.

END OF SECTION

SECTION 053100

STEEL DECKING

PART 1 - GENERAL

1.1 RELATED DOCUMENTS

A. Drawings and general provisions of the Contract, including General and Supplementary Conditions and Division 01 Specification Sections, apply to this Section.

1.2 SUMMARY

A. Section Includes:

1. Roof deck.
2. Acoustical roof deck.
3. Composite floor deck.

1.3 ACTION SUBMITTALS

A. Product Data: For each type of deck, accessory, and product indicated.

B. Shop Drawings:

1. Include layout and types of deck panels, anchorage details, reinforcing channels, pans, cut deck openings, special jointing, accessories, and attachments to other construction.

1.4 INFORMATIONAL SUBMITTALS

A. Welding certificates.

B. Product Certificates: For each type of steel deck.

C. Product Test Reports: For tests performed by a qualified testing agency, indicating that each of the following complies with requirements:

1. Power-actuated mechanical fasteners.
2. Acoustical roof deck.

D. Evaluation Reports: For steel deck, from ICC-ES.

E. Field quality-control reports.

1.5 QUALITY ASSURANCE

A. Welding Qualifications: Qualify procedures and personnel according to AWS D1.3/D1.3M, "Structural Welding Code - Sheet Steel."

B. FM Global Listing: Provide steel roof deck evaluated by FM Global and listed in its "Approval Guide, Building Materials" for Class 1 fire rating and Class 1-90 windstorm ratings.

1.6 DELIVERY, STORAGE, AND HANDLING

A. Protect steel deck from corrosion, deformation, and other damage during delivery, storage, and handling.

B. Stack steel deck on platforms or pallets and slope to provide drainage. Protect with a waterproof covering and ventilate to avoid condensation.

1. Protect and ventilate acoustical cellular roof deck with factory-installed insulation to maintain insulation free of moisture.

PART 2 - PRODUCTS

2.1 PERFORMANCE REQUIREMENTS

A. AISI Specifications: Comply with calculated structural characteristics of steel deck according to AISI's "North American Specification for the Design of Cold-Formed Steel Structural Members."

B. Fire-Resistance Ratings: Comply with ASTM E 119; testing by a qualified testing agency. Identify products with appropriate markings of applicable testing agency.

1. Indicate design designations from UL's "Fire Resistance Directory" or from the listings of another qualified testing agency.

2.2 ROOF DECK

A. Manufacturers: Subject to compliance with requirements, available manufacturers offering products that may be incorporated into the Work include, but are not limited to the following:

1. ASC Profiles, Inc.
2. Canam Steel Corporation; Canam Group, Inc.
3. Epic Metals Corporation.
4. New Millennium Building Systems, LLC.
5. Nucor Corp.
6. Roof Deck, Inc.
7. Valley Joist.
8. Verco Decking, Inc., a Nucor company.

B. Roof Deck: Fabricate panels, without top-flange stiffening grooves, to comply with "SDI Specifications and Commentary for Steel Roof Deck," in SDI Publication No. 31, and with the following:

1. Galvanized-Steel Sheet: ASTM A 653/A 653M, Structural Steel (SS), Grade 33, G60 zinc coating.
2. Deck Profile: As indicated.
3. Profile Depth: As indicated.
4. Design Uncoated-Steel Thickness: As indicated.
5. Span Condition: As indicated.

6. Side Laps: Overlapped.

2.3 ACOUSTICAL ROOF DECK

A. Manufacturers: Subject to compliance with requirements, available manufacturers offering products that may be incorporated into the Work include, but are not limited to the following:

1. Canam Steel Corporation; Canam Group, Inc.
2. Epic Metals Corporation.
3. New Millennium Building Systems, LLC.
4. Nucor Corp.

B. Acoustical Roof Deck: Fabricate panels, without top-flange stiffening grooves, to comply with "SDI Specifications and Commentary for Steel Roof Deck," in SDI Publication No. 31, and with the following:

1. Galvanized-Steel Sheet: ASTM A 653/A 653M, Structural Steel (SS), Grade 40, G90 zinc coating.
1. Galvanized and Shop-Primed Steel Sheet: ASTM A 653/A 653M, Structural Steel (SS), Grade 40, G60 zinc coating; cleaned, pretreated, and primed with manufacturer's standard baked-on, rust-inhibitive primer.

   a. Color: Gray.

2. Aluminum-Zinc-Alloy-Coated Steel Sheet: ASTM A 792/A 792M, Structural Steel (SS), Grade 33 minimum, AZ50 aluminum-zinc-alloy coating.
3. Deck Profile: As indicated.
4. Profile Depth: 2 inches.
5. Design Uncoated-Steel Thickness: As indicated.
6. Design Uncoated-Steel Thicknesses; Deck Unit/Bottom Plate: As indicated.
7. Span Condition: As indicated.
8. Side Laps: Overlapped.
9. Sound-Absorbing Insulation: Manufacturer's standard premolded roll or strip of glass or mineral fiber.

   a. Factory install sound-absorbing insulation into cells of cellular deck.

10. Acoustical Performance: NRC 0.95 minimum, tested according to ASTM C 423.

2.4 COMPOSITE FLOOR DECK

A. Manufacturers: Subject to compliance with requirements, available manufacturers offering products that may be incorporated into the Work include, but are not limited to the following:

1. ASC Profiles, Inc.
2. Canam Steel Corporation; Canam Group, Inc.
3. Epic Metals Corporation.
4. New Millennium Building Systems, LLC.
5. Nucor Corp.
6. Roof Deck, Inc.
7. Verco Decking, Inc., a Nucor company.

B. Composite Floor Deck: Fabricate panels, with integrally embossed or raised pattern ribs and interlocking side laps, to comply with "SDI Specifications and Commentary for Composite Steel Floor Deck," in SDI Publication No. 31, with the minimum section properties indicated, and with the following:

1. Galvanized-Steel Sheet: ASTM A 653/A 653M, Structural Steel (SS), Grade 33, G60 zinc coating.
2. Profile Depth: 1-1/2 inches.
3. Design Uncoated-Steel Thickness: As indicated.
4. Span Condition: As indicated.

2.5 ACCESSORIES

A. General: Provide manufacturer's standard accessory materials for deck that comply with requirements indicated.

B. Mechanical Fasteners: Corrosion-resistant, low-velocity, power-actuated or pneumatically driven carbon-steel fasteners; or self-drilling, self-threading screws.

C. Side-Lap Fasteners: Corrosion-resistant, hexagonal washer head; self-drilling, carbon-steel screws, No. 10 minimum diameter.

D. Flexible Closure Strips: Vulcanized, closed-cell, synthetic rubber.

E. Miscellaneous Sheet Metal Deck Accessories: Steel sheet, minimum yield strength of 33,000 psi, not less than 0.0359-inch design uncoated thickness, of same material and finish as deck; of profile indicated or required for application.

F. Pour Stops and Girder Fillers: Steel sheet, minimum yield strength of 33,000 psi, of same material and finish as deck, and of thickness and profile recommended by SDI Publication No. 31 for overhang and slab depth.

G. Column Closures, End Closures, Z-Closures, and Cover Plates: Steel sheet, of same material, finish, and thickness as deck unless otherwise indicated.

H. Flat Sump Plates: Single-piece steel sheet, 0.0747-inch-thick, of same material and finish as deck. For drains, cut holes in the field.

I. Recessed Sump Pans: Single-piece steel sheet, 0.0747-inch-thick, of same material and finish as deck, with 3-inch-wide flanges and level recessed pans of 1-1/2-inch minimum depth. For drains, cut holes in the field.

J. Galvanizing Repair Paint: ASTM A 780/A 780M.

K. Repair Paint: Manufacturer's standard rust-inhibitive primer of same color as primer.

PART 3 - EXECUTION

3.1 EXAMINATION

A. Examine supporting frame and field conditions for compliance with requirements for installation tolerances and other conditions affecting performance of the Work.

B. Proceed with installation only after unsatisfactory conditions have been corrected.

3.2 INSTALLATION, GENERAL

A. Install deck panels and accessories according to applicable specifications and commentary in SDI Publication No. 31, manufacturer's written instructions, and requirements in this Section.

B. Install temporary shoring before placing deck panels if required to meet deflection limitations.

C. Locate deck bundles to prevent overloading of supporting members.

D. Place deck panels on supporting frame and adjust to final position with ends accurately aligned and bearing on supporting frame before being permanently fastened. Do not stretch or contract side-lap interlocks.

1. Align cellular deck panels over full length of cell runs and align cells at ends of abutting panels.

E. Place deck panels flat and square and fasten to supporting frame without warp or deflection.

F. Cut and neatly fit deck panels and accessories around openings and other work projecting through or adjacent to deck.

G. Provide additional reinforcement and closure pieces at openings as required for strength, continuity of deck, and support of other work.

H. Comply with AWS requirements and procedures for manual shielded metal arc welding, appearance and quality of welds, and methods used for correcting welding work.

I. Mechanical fasteners may be used in lieu of welding to fasten deck. Locate mechanical fasteners and install according to deck manufacturer's written instructions.

3.3 ROOF-DECK INSTALLATION

A. Fasten roof-deck panels to steel supporting members by arc spot (puddle) welds of the surface diameter indicated or arc seam welds with an equal perimeter that is not less than 1-1/2 inches long, and as follows:

1. Weld Diameter: As indicated.
2. Weld Spacing: Weld edge and interior ribs of deck units with a minimum of two welds per deck unit at each support. Space welds as indicated.
3. Weld Washers: Install weld washers at each weld location.

B. Side-Lap and Perimeter Edge Fastening: Fasten side laps and perimeter edges of panels between supports, at intervals not exceeding the lesser of one-half of the span or 36 inches, and as follows:

1. Mechanically fasten with self-drilling, No. 10 diameter or larger, carbon-steel screws.
2. Fasten with a minimum of 1-1/2-inch-long welds.

C. End Bearing: Install deck ends over supporting frame with a minimum end bearing of 1-1/2 inches, with end joints as follows:

1. End Joints: Lapped 2 inches minimum or butted at Contractor's option.

D. Roof Sump Pans and Sump Plates: Install over openings provided in roof deck and mechanically fasten flanges to top of deck. Space mechanical fasteners not more than 12 inches apart with at least one fastener at each corner.

1. Install reinforcing channels or zees in ribs to span between supports and mechanically fasten.

E. Miscellaneous Roof-Deck Accessories: Install ridge and valley plates, finish strips, end closures, and reinforcing channels according to deck manufacturer's written instructions. Weld or mechanically fasten to substrate to provide a complete deck installation.

1. Weld cover plates at changes in direction of roof-deck panels unless otherwise indicated.

F. Flexible Closure Strips: Install flexible closure strips over partitions, walls, and where indicated. Install with adhesive according to manufacturer's written instructions to ensure complete closure.

3.4 FLOOR-DECK INSTALLATION

A. Fasten floor-deck panels to steel supporting members by arc spot (puddle) welds of the surface diameter indicated and as follows:

1. Weld Diameter: 5/8 inch, nominal.
2. Weld Spacing: Weld edge ribs of panels at each support. Space additional welds an average of 12 inches apart, but not more than 18 inches apart.
3. Weld Washers: Install weld washers at each weld location.

B. Side-Lap and Perimeter Edge Fastening: Fasten side laps and perimeter edges of panels between supports, at intervals not exceeding the lesser of one-half of the span or 36 inches, and as follows:

1. Mechanically fasten with self-drilling, No. 10 diameter or larger, carbon-steel screws.
2. Fasten with a minimum of 1-1/2-inch-long welds.

C. End Bearing: Install deck ends over supporting frame with a minimum end bearing of 1-1/2 inches, with end joints as follows:

1. End Joints: Lapped or butted at Contractor's option.

D. Pour Stops and Girder Fillers: Weld steel sheet pour stops and girder fillers to supporting structure according to SDI recommendations unless otherwise indicated.

E. Floor-Deck Closures: Weld steel sheet column closures, cell closures, and Z-closures to deck, according to SDI recommendations, to provide tight-fitting closures at open ends of ribs and sides of deck.

3.5 FIELD QUALITY CONTROL

A. Testing Agency: Owner will engage a qualified testing agency to perform tests and inspections.

B. Field welds will be subject to inspection.

3.6 PROTECTION

A. Galvanizing Repairs: Prepare and repair damaged galvanized coatings on both surfaces of deck with galvanized repair paint according to ASTM A 780/A 780M and manufacturer's written instructions.

B. Repair Painting: Wire brush and clean rust spots, welds, and abraded areas on both surfaces of prime-painted deck immediately after installation, and apply repair paint.

1. Apply repair paint, of same color as adjacent shop-primed deck, to bottom surfaces of deck exposed to view.

END OF SECTION

SECTION 054000

COLD-FORMED METAL FRAMING

PART 1 - GENERAL

1.1 RELATED DOCUMENTS

A. Drawings and general provisions of the Contract, including General and Supplementary Conditions and Division 01 Specification Sections, apply to this Section.

1.2 SUMMARY

A. Section Includes:

1. Load-bearing wall framing.
2. Exterior non-load-bearing wall framing.
3. Interior non-load-bearing wall framing exceeding height limitations of standard, nonstructural metal framing.
4. Floor joist framing.
5. Roof rafter framing.
6. Ceiling joist framing.
7. Soffit framing.

1.3 PREINSTALLATION MEETINGS

A. Preinstallation Conference: Conduct conference at Project site.

1.4 ACTION SUBMITTALS

A. Product Data: For each type of product.

B. Shop Drawings:

1. Include layout, spacings, sizes, thicknesses, and types of cold-formed steel framing; fabrication; and fastening and anchorage details, including mechanical fasteners.
2. Indicate reinforcing channels, opening framing, supplemental framing, strapping, bracing, bridging, splices, accessories, connection details, and attachment to adjoining work.

C. Delegated-Design Submittal: For cold-formed steel framing.

1.5 INFORMATIONAL SUBMITTALS

A. Qualification Data: For testing agency.

B. Welding certificates.

C. Product Certificates: For each type of code-compliance certification for studs and tracks.

D. Product Test Reports: For each listed product, for tests performed by manufacturer and witnessed by a qualified testing agency.

1. Steel sheet.
2. Expansion anchors.
3. Power-actuated anchors.
4. Mechanical fasteners.
5. Vertical deflection clips.
6. Horizontal drift deflection clips
7. Miscellaneous structural clips and accessories.

E. Evaluation Reports: For nonstandard cold-formed steel framing, from ICC-ES or other qualified testing agency acceptable to authorities having jurisdiction.

1.6 QUALITY ASSURANCE

A. Testing Agency Qualifications: Qualified according to ASTM E 329 for testing indicated.

B. Product Tests: Mill certificates or data from a qualified independent testing agency, or in-house testing with calibrated test equipment, indicating steel sheet complies with requirements, including base-metal thickness, yield strength, tensile strength, total elongation, chemical requirements, and metallic-coating thickness.

C. Welding Qualifications: Qualify procedures and personnel according to the following:

1. AWS D1.1/D1.1M, "Structural Welding Code - Steel."
2. AWS D1.3/D1.3M, "Structural Welding Code - Sheet Steel."

PART 2 - PRODUCTS

2.1 MANUFACTURERS

A. Manufacturers: Subject to compliance with requirements, available manufacturers offering products that may be incorporated into the Work include, but are not limited to the following:

1. ClarkDietrich Building Systems.
2. MarinoWARE.
3. Steel Network, Inc. (The).
4. Super Stud Building Products Inc.
5. Telling Industries.

2.2 PERFORMANCE REQUIREMENTS

A. Delegated Design: Engage a qualified professional engineer, as defined in Section 014000 "Quality Requirements," to design cold-formed steel framing.

B. Structural Performance: Provide cold-formed steel framing capable of withstanding design loads within limits and under conditions indicated.

1. Design Loads: As indicated on Drawings.

2. Deflection Limits: Design framing systems to withstand design loads without deflections greater than the following:

   a. Exterior Non-Load-Bearing Framing: Horizontal deflection of 1/600 of the wall height.

3. Design framing systems to provide for movement of framing members located outside the insulated building envelope without damage or overstressing, sheathing failure, connection failure, undue strain on fasteners and anchors, or other detrimental effects when subject to a maximum ambient temperature change of 120 deg F.
4. Design framing system to maintain clearances at openings, to allow for construction tolerances, and to accommodate live load deflection of primary building structure as follows:

   a. Upward and downward movement of 1 inch.

5. Design exterior non-load-bearing wall framing to accommodate horizontal deflection without regard for contribution of sheathing materials.

2.3 COLD-FORMED STEEL FRAMING MATERIALS

A. Steel Sheet: ASTM A 1003/A 1003M, Structural Grade, Type H, metallic coated, of grade and coating designation as follows:

   1. Grade: As required by structural performance.
   2. Coating: G90.

B. Steel Sheet for Vertical Deflection and Drift Clips: ASTM A 653/A 653M, structural steel, zinc coated, of grade and coating as follows:

   1. Grade: As required by structural performance.
   2. Coating: G90.

2.4 EXTERIOR NON-LOAD-BEARING WALL FRAMING

A. Steel Studs: Manufacturer's standard C-shaped steel studs, of web depths indicated, punched, with stiffened flanges, and as follows:

   1. Minimum Base-Metal Thickness: 0.0538 inch.
   2. Flange Width: 1-5/8 inches minimum.

B. Steel Track: Manufacturer's standard U-shaped steel track, of web depths indicated, unpunched, with unstiffened flanges, and as follows:

   1. Minimum Base-Metal Thickness: 0.0538 inch.
   2. Flange Width: 1-1/4 inches.

C. Vertical Deflection Clips: Manufacturer's standard bypass clips, capable of accommodating upward and downward vertical displacement of primary structure through positive mechanical attachment to stud web.

D. Single Deflection Track: Manufacturer's single, deep-leg, U-shaped steel track; unpunched, with unstiffened flanges, of web depth to contain studs while allowing free vertical movement, with

flanges designed to support horizontal loads and transfer them to the primary structure, and as follows:

1. Minimum Base-Metal Thickness: 0.0538 inch.
2. Flange Width: 2-inch minimum.

E. Double Deflection Tracks: Manufacturer's double, deep-leg, U-shaped steel tracks, consisting of nested inner and outer tracks; unpunched, with unstiffened flanges.

1. Outer Track: Of web depth to allow free vertical movement of inner track, with flanges designed to support horizontal loads and transfer them to the primary structure, and as follows:

   a. Minimum Base-Metal Thickness: 0.0538 inch.
   b. Flange Width: 2-inch minimum.

2. Inner Track: Of web depth indicated, and as follows:

   a. Minimum Base-Metal Thickness: 0.0538 inch.

F. Drift Clips: Manufacturer's standard bypass or head clips, capable of isolating wall stud from upward and downward vertical displacement and lateral drift of primary structure through positive mechanical attachment to stud web and structure.

2.5 SOFFIT FRAMING

A. Exterior Soffit Frame: Manufacturer's standard C-shaped steel sections, of web depths indicated, with stiffened flanges, and as follows:

1. Minimum Base-Metal Thickness: 0.0428 inch.
2. Flange Width: 2-1/2 inches, minimum.

2.6 FRAMING ACCESSORIES

A. Fabricate steel-framing accessories from ASTM A 1003/A 1003M, Structural Grade, Type H, metallic coated steel sheet, of same grade and coating designation used for framing members.

B. Provide accessories of manufacturer's standard thickness and configuration, unless otherwise indicated, as follows:

1. Supplementary framing.
2. Bracing, bridging, and solid blocking.
3. Web stiffeners.
4. Anchor clips.
5. End clips.
6. Gusset plates.
7. Stud kickers and knee braces.
8. Hole-reinforcing plates.
9. Backer plates.

2.7 ANCHORS, CLIPS, AND FASTENERS

A. Steel Shapes and Clips: ASTM A 36/A 36M, zinc coated by hot-dip process according to ASTM A 123/A 123M.

B. Anchor Bolts: ASTM F 1554, Grade 36, threaded carbon-steel headless bolts, with encased end threaded, carbon-steel nuts, and flat, hardened-steel washers; zinc coated by hot-dip process according to ASTM A 153/A 153M, Class C.

C. Post-Installed Anchors: Fastener systems with bolts of same basic metal as fastened metal, if visible, unless otherwise indicated; with working capacity greater than or equal to the design load, according to an evaluation report acceptable to authorities having jurisdiction, based on ICC-ES AC01, ICC-ES AC193, ICC-ES AC58, or ICC-ES AC308 as appropriate for the substrate.

1. Uses: Securing cold-formed steel framing to structure.
2. Type: Torque-controlled expansion anchor or adhesive anchor.
3. Material for Interior Locations: Carbon-steel components zinc plated to comply with ASTM B 633 or ASTM F 1941, Class Fe/Zn 5, unless otherwise indicated.

D. Power-Actuated Anchors: Fastener systems with working capacity greater than or equal to the design load, according to an evaluation report acceptable to authorities having jurisdiction, based on ICC-ES AC70.

E. Mechanical Fasteners: ASTM C 1513, corrosion-resistant-coated, self-drilling, self-tapping, steel drill screws.

1. Head Type: Low-profile head beneath sheathing; manufacturer's standard elsewhere.

F. Welding Electrodes: Comply with AWS standards.

2.8 MISCELLANEOUS MATERIALS

A. Galvanizing Repair Paint: SSPC-Paint 20.

B. Cement Grout: Portland cement, ASTM C 150/C 150M, Type I; and clean, natural sand, ASTM C 404. Mix at ratio of 1-part cement to 2-1/2 parts sand, by volume, with minimum water required for placement and hydration.

C. Nonmetallic, Nonshrink Grout: Factory-packaged, nonmetallic, noncorrosive, nonstaining grout, complying with ASTM C 1107/C 1107M, and with a fluid consistency and 30-minute working time.

D. Shims: Load-bearing, high-density, multimonomer, nonleaching plastic; or cold-formed steel of same grade and metallic coating as framing members supported by shims.

E. Sealer Gaskets: Closed-cell neoprene foam, 1/4-inch-thick, selected from manufacturer's standard widths to match width of bottom track or rim track members as required.

2.9 FABRICATION

A. Fabricate cold-formed steel framing and accessories plumb, square, and true to line, and with connections securely fastened, according to referenced AISI's specifications and standards, manufacturer's written instructions, and requirements in this Section.

1. Fabricate framing assemblies using jigs or templates.
2. Cut framing members by sawing or shearing; do not torch cut.
3. Fasten cold-formed steel framing members by welding, screw fastening, clinch fastening, pneumatic pin fastening, or riveting as standard with fabricator. Wire tying of framing members is not permitted.

   a. Comply with AWS D1.3/D1.3M requirements and procedures for welding, appearance and quality of welds, and methods used in correcting welding work.
   b. Locate mechanical fasteners and install according to Shop Drawings, with screws penetrating joined members by no fewer than three exposed screw threads.

4. Fasten other materials to cold-formed steel framing by welding, bolting, pneumatic pin fastening, or screw fastening, according to Shop Drawings.

B. Reinforce, stiffen, and brace framing assemblies to withstand handling, delivery, and erection stresses. Lift fabricated assemblies by means that prevent damage or permanent distortion.

C. Tolerances: Fabricate assemblies level, plumb, and true to line to a maximum allowable variation of 1/8 inch in 10 feet and as follows:

1. Spacing: Space individual framing members no more than plus or minus 1/8 inch from plan location. Cumulative error shall not exceed minimum fastening requirements of sheathing or other finishing materials.
2. Squareness: Fabricate each cold-formed steel framing assembly to a maximum out-of-square tolerance of 1/8 inch.

PART 3 - EXECUTION

3.1 EXAMINATION

A. Examine substrates, areas, conditions, and abutting structural framing for compliance with requirements for installation tolerances and other conditions affecting performance of the Work.

B. Proceed with installation only after unsatisfactory conditions have been corrected.

3.2 PREPARATION

A. Before sprayed fire-resistive materials are applied, attach continuous angles, supplementary framing, or tracks to structural members indicated to receive sprayed fire-resistive materials.

B. After applying sprayed fire-resistive materials, remove only as much of these materials as needed to complete installation of cold-formed framing without reducing thickness of fire-resistive materials below that required to obtain fire-resistance ratings indicated. Protect remaining fire-resistive materials from damage.

C. Install load-bearing shims or grout between the underside of load-bearing wall bottom track and the top of foundation wall or slab at locations with a gap larger than 1/4 inch to ensure a uniform bearing surface on supporting concrete or masonry construction.

D. Install sealer gaskets at the underside of wall bottom track or rim track and at the top of foundation wall or slab at stud or joist locations.

3.3 INSTALLATION, GENERAL

A. Cold-formed steel framing may be shop or field fabricated for installation, or it may be field assembled.

B. Install cold-formed steel framing according to AISI S200, AISI S202, and manufacturer's written instructions unless more stringent requirements are indicated.

C. Install shop- or field-fabricated, cold-formed framing and securely anchor to supporting structure.

1. Screw, bolt, or weld wall panels at horizontal and vertical junctures to produce flush, even, true-to-line joints with maximum variation in plane and true position between fabricated panels not exceeding 1/16 inch.

D. Install cold-formed steel framing and accessories plumb, square, and true to line, and with connections securely fastened.

1. Cut framing members by sawing or shearing; do not torch cut.
2. Fasten cold-formed steel framing members by welding, screw fastening, clinch fastening, or riveting. Wire tying of framing members is not permitted.

a. Comply with AWS D1.3/D1.3M requirements and procedures for welding, appearance and quality of welds, and methods used in correcting welding work.
b. Locate mechanical fasteners, install according to Shop Drawings, and comply with requirements for spacing, edge distances, and screw penetration.

E. Install framing members in one-piece lengths unless splice connections are indicated for track or tension members.

F. Install temporary bracing and supports to secure framing and support loads equal to those for which structure was designed. Maintain braces and supports in place, undisturbed, until entire integrated supporting structure has been completed and permanent connections to framing are secured.

G. Do not bridge building expansion joints with cold-formed steel framing. Independently frame both sides of joints.

H. Install insulation, specified in Section 072100 "Thermal Insulation," in framing-assembly members, such as headers, sills, boxed joists, and multiple studs at openings, that are inaccessible on completion of framing work.

I. Fasten hole-reinforcing plate over web penetrations that exceed size of manufacturer's approved or standard punched openings.

3.4 EXTERIOR NON-LOAD-BEARING WALL INSTALLATION

A. Install continuous tracks sized to match studs. Align tracks accurately and securely anchor to supporting structure.

B. Fasten both flanges of studs to top and bottom track unless otherwise indicated or at deflection track. Space studs as follows:

1. Stud Spacing: 16 inches minimum.

C. Set studs plumb, except as needed for diagonal bracing or required for nonplumb walls or warped surfaces and similar requirements.

D. Isolate non-load-bearing steel framing from building structure to prevent transfer of vertical loads while providing lateral support.

1. Install single deep-leg deflection tracks and anchor to building structure.
2. Install double deep-leg deflection tracks and anchor outer track to building structure.

E. Install horizontal bridging in wall studs, spaced vertically in rows not more than 48 inches apart. Fasten at each stud intersection.

1. Channel Bridging: Cold-rolled steel channel, welded or mechanically fastened to webs of punched studs.
2. Strap Bridging: Combination of flat, taut, steel sheet straps of width and thickness indicated and stud-track solid blocking of width and thickness to match studs. Fasten flat straps to stud flanges and secure solid blocking to stud webs or flanges.
3. Bar Bridging: Proprietary bridging bars installed according to manufacturer's written instructions.

F. Top Bridging for Single Deflection Track: Install row of horizontal bridging within 12 inches of single deflection track. Install a combination of bridging and stud or stud-track solid blocking of width and thickness matching studs, secured to stud webs or flanges.

1. Install solid blocking at 96-inch centers.

G. Install miscellaneous framing and connections, including stud kickers, web stiffeners, clip angles, continuous angles, anchors, and fasteners, to provide a complete and stable wall-framing system.

3.5 ERECTION TOLERANCES

A. Install cold-formed steel framing level, plumb, and true to line to a maximum allowable tolerance variation of 1/8 inch in 10 feet and as follows:

1. Space individual framing members no more than plus or minus 1/8 inch from plan location. Cumulative error shall not exceed minimum fastening requirements of sheathing or other finishing materials.

3.6 FIELD QUALITY CONTROL

A. Testing: Owner will engage a qualified independent testing and inspecting agency to perform field tests and inspections and prepare test reports.

B. Field and shop welds will be subject to testing and inspecting.

C. Testing agency will report test results promptly and in writing to Contractor and Architect.

D. Cold-formed steel framing will be considered defective if it does not pass tests and inspections.

E. Additional testing and inspecting, at Contractor's expense, will be performed to determine compliance of replaced or additional work with specified requirements.

3.7 REPAIRS AND PROTECTION

A. Galvanizing Repairs: Prepare and repair damaged galvanized coatings on fabricated and installed cold-formed steel framing with galvanized repair paint according to ASTM A 780/A 780M and manufacturer's written instructions.

B. Provide final protection and maintain conditions, in a manner acceptable to manufacturer and Installer, that ensure that cold-formed steel framing is without damage or deterioration at time of Substantial Completion.

END OF SECTION

SECTION 055000

METAL FABRICATIONS

PART 1 - GENERAL

1.1 RELATED DOCUMENTS

A. Drawings and general provisions of the Contract, including General and Supplementary Conditions and Division 01 Specification Sections, apply to this Section.

1.2 SUMMARY

A. Section Includes:

1. Steel framing and supports for operable partitions.
2. Steel framing and supports for overhead doors.
3. Steel framing and supports for countertops.
4. Steel tube reinforcement for low partitions.
5. Steel framing and supports for mechanical and electrical equipment.
6. Steel framing and supports for applications where framing and supports are not specified in other Sections.
7. Elevator machine beams, hoist beams, and divider beams.
8. Steel shapes for supporting elevator door sills.
9. Shelf angles.
10. Metal ladders.
11. Elevator pit sump covers.
12. Metal downspout boots.
13. Loose bearing and leveling plates for applications where they are not specified in other Sections.

B. Products furnished, but not installed, under this Section include the following:

1. Loose steel lintels.
2. Anchor bolts, steel pipe sleeves, slotted-channel inserts, and wedge-type inserts indicated to be cast into concrete or built into unit masonry.
3. Steel weld plates and angles for casting into concrete for applications where they are not specified in other Sections.

1.3 COORDINATION

A. Coordinate selection of shop primers with topcoats to be applied over them. Comply with paint and coating manufacturers' written recommendations to ensure that shop primers and topcoats are compatible with one another.

B. Coordinate installation of metal fabrications that are anchored to or that receive other work. Furnish setting drawings, templates, and directions for installing anchorages, including sleeves, concrete inserts, anchor bolts, and items with integral anchors, that are to be embedded in concrete or masonry. Deliver such items to Project site in time for installation.

1.4 ACTION SUBMITTALS

A. Product Data: For the following:

1. Paint products.
2. Grout.

B. Shop Drawings: Show fabrication and installation details. Include plans, elevations, sections, and details of metal fabrications and their connections. Show anchorage and accessory items. Provide Shop Drawings for the following:

1. Steel framing and supports for operable partitions.
2. Steel framing and supports for overhead doors.
3. Steel framing and supports for countertops.
4. Steel tube reinforcement for low partitions.
5. Steel framing and supports for mechanical and electrical equipment.
6. Steel framing and supports for applications where framing and supports are not specified in other Sections.
7. Elevator machine beams, hoist beams, and divider beams.
8. Steel shapes for supporting elevator door sills.
9. Shelf angles.
10. Metal ladders.
11. Elevator pit sump covers.
12. Metal downspout boots.
13. Loose steel lintels.

C. Delegated-Design Submittal: For ladders, including analysis data signed and sealed by the qualified professional engineer responsible for their preparation.

1.5 INFORMATIONAL SUBMITTALS

A. Qualification Data: For professional engineer.

B. Welding certificates.

C. Paint Compatibility Certificates: From manufacturers of topcoats applied over shop primers, certifying that shop primers are compatible with topcoats.

D. Research/Evaluation Reports: For post-installed anchors, from ICC-ES.

1.6 QUALITY ASSURANCE

A. Welding Qualifications: Qualify procedures and personnel according to AWS D1.1/D1.1M, "Structural Welding Code - Steel."

B. Welding Qualifications: Qualify procedures and personnel according to the following:

1. AWS D1.1/D1.1M, "Structural Welding Code - Steel."
2. AWS D1.2/D1.2M, "Structural Welding Code - Aluminum."
3. AWS D1.6/D1.6M, "Structural Welding Code - Stainless Steel."

1.7 FIELD CONDITIONS

A. Field Measurements: Verify actual locations of walls and other construction contiguous with metal fabrications by field measurements before fabrication.

PART 2 - PRODUCTS

2.1 PERFORMANCE REQUIREMENTS

A. Delegated Design: Engage a qualified professional engineer, as defined in Section 014000 "Quality Requirements," to design ladders.

B. Thermal Movements: Allow for thermal movements from ambient and surface temperature changes acting on exterior metal fabrications by preventing buckling, opening of joints, overstressing of components, failure of connections, and other detrimental effects.

1. Temperature Change: 120 deg F, ambient; 180 deg F, material surfaces.

2.2 METALS

A. Metal Surfaces, General: Provide materials with smooth, flat surfaces unless otherwise indicated. For metal fabrications exposed to view in the completed Work, provide materials without seam marks, roller marks, rolled trade names, or blemishes.

B. Steel Plates, Shapes, and Bars: ASTM A 36/A 36M.

C. Rolled-Steel Floor Plate: ASTM A 786/A 786M, rolled from plate complying with ASTM A 36/A 36M or ASTM A 283/A 283M, Grade C or D.

D. Steel Tubing: ASTM A 500/A 500M, cold-formed steel tubing.

E. Steel Pipe: ASTM A 53/A 53M, Standard Weight (Schedule 40) unless otherwise indicated.

F. Cast Iron: Either gray iron, ASTM A 48/A 48M, or malleable iron, ASTM A 47/A 47M, unless otherwise indicated.

G. Aluminum Plate and Sheet: ASTM B 209, Alloy 6061-T6.

H. Aluminum Extrusions: ASTM B 221, Alloy 6063-T6.

I. Aluminum-Alloy Rolled Tread Plate: ASTM B 632/B 632M, Alloy 6061-T6.

J. Aluminum Castings: ASTM B 26/B 26M, Alloy 443.0-F.

2.3 FASTENERS

A. General: Unless otherwise indicated, provide Type 304 stainless-steel fasteners for exterior use and zinc-plated fasteners with coating complying with ASTM B 633 or ASTM F 1941, Class Fe/Zn 5, at exterior walls. Select fasteners for type, grade, and class required.

1. Provide stainless-steel fasteners for fastening aluminum.

2. Provide stainless-steel fasteners for fastening stainless steel.

B. Steel Bolts and Nuts: Regular hexagon-head bolts, ASTM A 307, Grade A; with hex nuts, ASTM A 563; and, where indicated, flat washers.

C. Stainless-Steel Bolts and Nuts: Regular hexagon-head annealed stainless-steel bolts, ASTM F 593; with hex nuts, ASTM F 594; and, where indicated, flat washers; Alloy Group 1.

D. Anchor Bolts: ASTM F 1554, Grade 36, of dimensions indicated; with nuts, ASTM A 563; and, where indicated, flat washers.

1. Hot-dip galvanize or provide mechanically deposited, zinc coating where item being fastened is indicated to be galvanized.

E. Anchors, General: Anchors capable of sustaining, without failure, a load equal to six times the load imposed when installed in unit masonry and four times the load imposed when installed in concrete, as determined by testing according to ASTM E 488/E 488M, conducted by a qualified independent testing agency.

F. Cast-in-Place Anchors in Concrete: Either threaded type or wedge type unless otherwise indicated; galvanized ferrous castings, either ASTM A 47/A 47M malleable iron or ASTM A 27/A 27M cast steel. Provide bolts, washers, and shims as needed, all hot-dip galvanized per ASTM F 2329.

G. Post-Installed Anchors: Torque-controlled expansion anchors or chemical anchors.

1. Material for Interior Locations: Carbon-steel components zinc plated to comply with ASTM B 633 or ASTM F 1941, Class Fe/Zn 5, unless otherwise indicated.
2. Material for Exterior Locations and Where Stainless Steel Is Indicated: Alloy Group 2 stainless-steel bolts, ASTM F 593, and nuts, ASTM F 594.

H. Slotted-Channel Inserts: Cold-formed, hot-dip galvanized-steel box channels (struts) complying with MFMA-4, 1-5/8 by 7/8 inches by length indicated with anchor straps or studs not less than 3 inches long at not more than 8 inches o.c. Provide with temporary filler and tee-head bolts, complete with washers and nuts, all zinc-plated to comply with ASTM B 633, Class Fe/Zn 5, as needed for fastening to inserts.

2.4 MISCELLANEOUS MATERIALS

A. Universal Shop Primer: Fast-curing, lead- and chromate-free, universal modified-alkyd primer complying with MPI#79 and compatible with topcoat.

1. Use primer containing pigments that make it easily distinguishable from zinc-rich primer.

B. Epoxy Zinc-Rich Primer: Complying with MPI#20 and compatible with topcoat.

C. Shop Primer for Galvanized Steel: Primer formulated for exterior use over zinc-coated metal and compatible with finish paint systems indicated.

D. Galvanizing Repair Paint: High-zinc-dust-content paint complying with SSPC-Paint 20 and compatible with paints specified to be used over it.

E. Bituminous Paint: Cold-applied asphalt emulsion complying with ASTM D 1187/D 1187M.

F. Nonshrink, Nonmetallic Grout: Factory-packaged, nonstaining, noncorrosive, nongaseous grout complying with ASTM C 1107/C 1107M. Provide grout specifically recommended by manufacturer for interior and exterior applications.

2.5 FABRICATION, GENERAL

A. Shop Assembly: Preassemble items in the shop to greatest extent possible. Disassemble units only as necessary for shipping and handling limitations. Use connections that maintain structural value of joined pieces. Clearly mark units for reassembly and coordinated installation.

B. Cut, drill, and punch metals cleanly and accurately. Remove burrs and ease edges to a radius of approximately 1/32 inch unless otherwise indicated. Remove sharp or rough areas on exposed surfaces.

C. Form bent-metal corners to smallest radius possible without causing grain separation or otherwise impairing work.

D. Form exposed work with accurate angles and surfaces and straight edges.

E. Weld corners and seams continuously to comply with the following:

1. Use materials and methods that minimize distortion and develop strength and corrosion resistance of base metals.
2. Obtain fusion without undercut or overlap.
3. Remove welding flux immediately.
4. At exposed connections, finish exposed welds and surfaces smooth and blended so no roughness shows after finishing and contour of welded surface matches that of adjacent surface.

F. Form exposed connections with hairline joints, flush and smooth, using concealed fasteners or welds where possible. Where exposed fasteners are required, use Phillips flat-head (countersunk) fasteners unless otherwise indicated. Locate joints where least conspicuous.

G. Fabricate seams and other connections that are exposed to weather in a manner to exclude water. Provide weep holes where water may accumulate.

H. Cut, reinforce, drill, and tap metal fabrications as indicated to receive finish hardware, screws, and similar items.

I. Provide for anchorage of type indicated; coordinate with supporting structure. Space anchoring devices to secure metal fabrications rigidly in place and to support indicated loads.

J. Where units are indicated to be cast into concrete or built into masonry, equip with integrally welded steel strap anchors, 1/8 by 1-1/2 inches, with a minimum 6-inch embedment and 2-inch hook, not less than 8 inches from ends and corners of units and 24 inches o.c., unless otherwise indicated.

2.6 MISCELLANEOUS FRAMING AND SUPPORTS

A. General: Provide steel framing and supports not specified in other Sections as needed to complete the Work.

B. Fabricate units from steel shapes, plates, and bars of welded construction unless otherwise indicated. Fabricate to sizes, shapes, and profiles indicated and as necessary to receive adjacent construction.

1. Fabricate units from slotted channel framing where indicated.
2. Furnish inserts for units installed after concrete is placed.

C. Fabricate supports for operable partitions from continuous steel beams of sizes recommended by partition manufacturer with attached bearing plates, anchors, and braces as recommended by partition manufacturer. Drill or punch bottom flanges of beams to receive partition track hanger rods; locate holes where indicated on operable partition Shop Drawings.

D. Prime miscellaneous framing and supports with zinc-rich primer where indicated.

2.7 SHELF ANGLES

A. Fabricate shelf angles from steel angles of sizes indicated and for attachment to concrete framing. Provide horizontally slotted holes to receive 3/4-inch bolts, spaced not more than 6 inches from ends and 24 inches o.c., unless otherwise indicated.

1. Provide mitered and welded units at corners.
2. Provide open joints in shelf angles at expansion and control joints. Make open joint approximately 2 inches larger than expansion or control joint.

B. For cavity walls, provide vertical channel brackets to support angles from backup masonry and concrete.

C. Galvanize shelf angles located in exterior walls.

D. Furnish wedge-type concrete inserts, complete with fasteners, to attach shelf angles to cast-in-place concrete.

2.8 METAL LADDERS

A. General:

1. Comply with ANSI A14.3, except for elevator pit ladders.
2. For elevator pit ladders, comply with ASME A17.1/CSA B44.

B. Steel Ladders:

1. Space siderails 20-1/4 inches apart unless otherwise indicated.
2. Siderails: Continuous, 3/8-by-2-1/2-inch steel flat bars, with eased edges.
3. Rungs: 3/4-inch-square steel bars, 12 inches o.c. Top rung 3 inches below bottom of roof hatch.
4. Fit rungs in centerline of siderails; plug-weld and grind smooth on outer rail faces.
5. Provide nonslip surfaces on top of each rung, either by coating rung with aluminum-oxide granules set in epoxy-resin adhesive or by using a type of manufactured rung filled with aluminum-oxide grout.
6. Provide nonslip surfaces on top of each rung by coating with abrasive material metallically bonded to rung.

7. Provide platforms as indicated fabricated from welded or pressure-locked steel bar grating, supported by steel angles. Limit openings in gratings to no more than 1/2 inch in least dimension.
8. Support each ladder at top and bottom and not more than 60 inches o.c. with welded or bolted steel brackets. Distance from wall to center line of rung should be 7 inches.

2.9 ELEVATOR PIT SUMP COVERS

A. Fabricate from welded or pressure-locked steel bar grating Limit openings in gratings to no more than 1/2 inch in least dimension.

B. Provide steel angle supports as indicated.

2.10 MISCELLANEOUS STEEL TRIM

A. Unless otherwise indicated, fabricate units from steel shapes, plates, and bars of profiles shown with continuously welded joints and smooth exposed edges. Miter corners and use concealed field splices where possible.

B. Provide cutouts, fittings, and anchorages as needed to coordinate assembly and installation with other work.

1. Provide with integrally welded steel strap anchors for embedding in concrete or masonry construction.

C. Galvanize miscellaneous steel trim.

2.11 METAL DOWNSPOUT BOOTS

A. Provide downspout boots made from cast iron in heights indicated with inlets of size and shape to suit downspouts. Provide units with flanges and holes for countersunk anchor bolts.

1. Basis of Design Product: Subject to compliance with requirements, provide the following:

a. Jay R. Smith Mfg. Co.; 4 by 3-inch Rectangular Downspout Boot # 1785.

B. Prime cast-iron downspout boots with zinc-rich primer.

2.12 LOOSE BEARING AND LEVELING PLATES

A. Provide loose bearing and leveling plates for steel items bearing on masonry or concrete construction. Drill plates to receive anchor bolts and for grouting.

B. Galvanize plates.

2.13 LOOSE STEEL LINTELS

A. Fabricate loose steel lintels from steel angles and shapes of size indicated for openings and recesses in masonry walls and partitions at locations indicated. Fabricate in single lengths for

each opening unless otherwise indicated. Weld adjoining members together to form a single unit where indicated.

B. Size loose lintels to provide bearing length at each side of openings equal to 1/12 of clear span, but not less than 8 inches unless otherwise indicated.

C. Galvanize loose steel lintels located in exterior walls.

2.14 STEEL WELD PLATES AND ANGLES

A. Provide steel weld plates and angles not specified in other Sections, for items supported from concrete construction as needed to complete the Work. Provide each unit with no fewer than two integrally welded steel strap anchors for embedding in concrete.

2.15 FINISHES, GENERAL

A. Finish metal fabrications after assembly.

B. Finish exposed surfaces to remove tool and die marks and stretch lines, and to blend into surrounding surface.

2.16 STEEL AND IRON FINISHES

A. Galvanizing: Hot-dip galvanize items as indicated to comply with ASTM A 153/A 153M for steel and iron hardware and with ASTM A 123/A 123M for other steel and iron products.

1. Do not quench or apply post galvanizing treatments that might interfere with paint adhesion.

B. Preparation for Shop Priming Galvanized Items: After galvanizing, thoroughly clean railings of grease, dirt, oil, flux, and other foreign matter, and treat with metallic phosphate process.

C. Shop prime iron and steel items not indicated to be galvanized unless they are to be embedded in concrete, sprayed-on fireproofing, or masonry, or unless otherwise indicated.

1. Shop prime with universal shop primer unless zinc-rich primer is indicated.

D. Preparation for Shop Priming: Prepare surfaces to comply with requirements indicated below:

1. Exterior Items: SSPC-SP 6/NACE No. 3, "Commercial Blast Cleaning."
2. Items Indicated to Receive Zinc-Rich Primer: SSPC-SP 6/NACE No. 3, "Commercial Blast Cleaning."
3. Other Items: SSPC-SP 3, "Power Tool Cleaning."

E. Shop Priming: Apply shop primer to comply with SSPC-PA 1, "Paint Application Specification No. 1: Shop, Field, and Maintenance Painting of Steel," for shop painting.

1. Stripe paint corners, crevices, bolts, welds, and sharp edges.

2.17 ALUMINUM FINISHES

A. As-Fabricated Finish: AA-M12.

PART 3 - EXECUTION

3.1 INSTALLATION, GENERAL

A. Cutting, Fitting, and Placement: Perform cutting, drilling, and fitting required for installing metal fabrications. Set metal fabrications accurately in location, alignment, and elevation; with edges and surfaces level, plumb, true, and free of rack; and measured from established lines and levels.

B. Fit exposed connections accurately together to form hairline joints. Weld connections that are not to be left as exposed joints but cannot be shop welded because of shipping size limitations. Do not weld, cut, or abrade surfaces of exterior units that have been hot-dip galvanized after fabrication and are for bolted or screwed field connections.

C. Field Welding: Comply with the following requirements:

1. Use materials and methods that minimize distortion and develop strength and corrosion resistance of base metals.
2. Obtain fusion without undercut or overlap.
3. Remove welding flux immediately.
4. At exposed connections, finish exposed welds and surfaces smooth and blended so no roughness shows after finishing and contour of welded surface matches that of adjacent surface.

D. Fastening to In-Place Construction: Provide anchorage devices and fasteners where metal fabrications are required to be fastened to in-place construction. Provide threaded fasteners for use with concrete and masonry inserts, toggle bolts, through bolts, lag screws, wood screws, and other connectors.

E. Provide temporary bracing or anchors in formwork for items that are to be built into concrete, masonry, or similar construction.

F. Corrosion Protection: Coat concealed surfaces of aluminum that come into contact with grout, concrete, masonry, wood, or dissimilar metals with the following:

1. Cast Aluminum: Heavy coat of bituminous paint.
2. Extruded Aluminum: Two coats of clear lacquer.

3.2 INSTALLING MISCELLANEOUS FRAMING AND SUPPORTS

A. General: Install framing and supports to comply with requirements of items being supported, including manufacturers' written instructions and requirements indicated on Shop Drawings.

B. Anchor supports for operable partitions and overhead doors securely to, and rigidly brace from, building structure.

3.3 INSTALLING BEARING AND LEVELING PLATES

A. Clean concrete and masonry bearing surfaces of bond-reducing materials, and roughen to improve bond to surfaces. Clean bottom surface of plates.

B. Set bearing and leveling plates on wedges, shims, or leveling nuts. After bearing members have been positioned and plumbed, tighten anchor bolts. Do not remove wedges or shims but, if protruding, cut off flush with edge of bearing plate before packing with nonshrink grout. Pack grout solidly between bearing surfaces and plates to ensure that no voids remain.

3.4 ADJUSTING AND CLEANING

A. Touchup Painting: Immediately after erection, clean field welds, bolted connections, and abraded areas. Paint uncoated and abraded areas with the same material as used for shop painting to comply with SSPC-PA 1 for touching up shop-painted surfaces.

1. Apply by brush or spray to provide a minimum 2.0-mil dry film thickness.

Galvanized Surfaces: Clean field welds, bolted connections, and abraded areas and repair galvanizing to comply with ASTM A 780/A 780M.

END OF SECTION

SECTION 055113

METAL PAN STAIRS

PART 1 - GENERAL

1.1 RELATED DOCUMENTS

A. Drawings and general provisions of the Contract, including General and Supplementary Conditions and Division 01 Specification Sections, apply to this Section.

1.2 SUMMARY

A. Section Includes:

1. Preassembled interior steel stairs with concrete-filled treads.

1.3 COORDINATION

A. Coordinate selection of shop primers with topcoats to be applied over them. Comply with paint and coating manufacturers' written instructions to ensure that shop primers and topcoats are compatible with one another.

B. Coordinate locations of hanger rods and struts with other work so they do not encroach on required stair width and are within fire-resistance-rated stair enclosure.

1.4 ACTION SUBMITTALS

A. Product Data: For metal pan stairs.

B. Shop Drawings: Include plans, elevations, sections, details, and attachments to other work.

C. Delegated-Design Submittal: For stairs, railings,, including analysis data signed and sealed by the qualified professional engineer responsible for their preparation.

D. Qualification Data: For professional engineer's experience with providing delegated-design engineering services of the kind indicated, including documentation that engineer is licensed in the State in which Project is located.

E. Welding certificates.

1.5 QUALITY ASSURANCE

A. Installer Qualifications: Fabricator of products.

B. Welding Qualifications: Qualify procedures and personnel according to the following:

1. AWS D1.1/D1.1M, "Structural Welding Code - Steel."

2. AWS D1.3/D1.3M, "Structural Welding Code - Sheet Steel."

1.6 DELIVERY, STORAGE, AND HANDLING

A. Store materials to permit easy access for inspection and identification.

1. Keep steel members off ground and spaced by using pallets, dunnage, or other supports and spacers.
2. Protect steel members and packaged materials from corrosion and deterioration.
3. Do not store materials on structure in a manner that might cause distortion, damage, or overload to members or supporting structures.

a. Repair or replace damaged materials or structures as directed.

PART 2 - PRODUCTS

2.1 PERFORMANCE REQUIREMENTS

A. Delegated Design: Engage a qualified professional engineer, as defined in Section 014000 "Quality Requirements," to design stairs.

B. Structural Performance of Stairs: Metal stairs shall withstand the effects of gravity loads and the following loads and stresses within limits and under conditions indicated:

1. Uniform Load: 100 lbf/sq. ft.
2. Concentrated Load: 300 lbf applied on an area of 4 sq. in.
3. Uniform and concentrated loads need not be assumed to act concurrently.
4. Stair Framing: Capable of withstanding stresses resulting from railing loads in addition to loads specified above.

2.2 METALS

A. Metal Surfaces, General: Provide materials with smooth, flat surfaces unless otherwise indicated. For components exposed to view in the completed Work, provide materials without seam marks, roller marks, rolled trade names, or blemishes.

B. Steel Plates, Shapes, and Bars: ASTM A 36/A 36M.

C. Steel Tubing: ASTM A 500 (cold formed) or ASTM A 513.

D. Uncoated, Cold-Rolled Steel Sheet: ASTM A 1008/A 1008M, either commercial steel, Type B, or structural steel, Grade 25, unless another grade is required by design loads; exposed.

E. Uncoated, Hot-Rolled Steel Sheet: ASTM A 1011/A 1011M, either commercial steel, Type B, or structural steel, Grade 30, unless another grade is required by design loads.

2.3 FASTENERS

A. Provide zinc-plated fasteners with coating complying with ASTM B 633 or ASTM F 1941, Class Fe/Zn 12 for exterior use, and Class Fe/Zn 5 where built into exterior walls. Select fasteners for type, grade, and class required.

B. Bolts and Nuts: Regular hexagon-head bolts, ASTM A 307, Grade A; with hex nuts, ASTM A 563; and, where indicated, flat washers.

C. Anchor Bolts: ASTM F 1554, Grade 36, of dimensions indicated; with nuts, ASTM A 563; and, where indicated, flat washers.

1. Provide mechanically deposited or hot-dip, zinc-coated anchor bolts for stairs indicated to be shop primed with zinc-rich primer.

D. Post-Installed Anchors: Torque-controlled expansion anchors or chemical anchors capable of sustaining, without failure, a load equal to six times the load imposed when installed in unit masonry and four times the load imposed when installed in concrete, as determined by testing according to ASTM E 488, conducted by a qualified independent testing agency.

1. Material for Interior Locations: Carbon-steel components zinc plated to comply with ASTM B 633 or ASTM F 1941, Class Fe/Zn 5, unless otherwise indicated.

2.4 MISCELLANEOUS MATERIALS

A. Shop Primers: Provide primers that comply with Section 099123 "Interior Painting”.

B. Universal Shop Primer: Fast-curing, lead- and chromate-free, universal modified-alkyd primer complying with MPI#79 and compatible with topcoat.

C. Bituminous Paint: Cold-applied asphalt emulsion complying with ASTM D 1187/D 1187M.

D. Concrete Materials and Properties: Comply with requirements in Section 033000 "Cast-in-Place Concrete" for normal-weight, air-entrained, ready-mix concrete with a minimum 28-day compressive strength of 3000 psi unless otherwise indicated.

E. Welded Wire Reinforcement: ASTM A 185/A 185M, 6 by 6 inches, W1.4 by W1.4, unless otherwise indicated.

2.5 FABRICATION, GENERAL

A. Provide complete stair assemblies, including metal framing, hangers, struts, clips, brackets, bearing plates, and other components necessary to support and anchor stairs and platforms on supporting structure.

1. Join components by welding unless otherwise indicated.
2. Use connections that maintain structural value of joined pieces.

B. Preassembled Stairs: Assemble stairs in shop to greatest extent possible. Disassemble units only as necessary for shipping and handling limitations. Clearly mark units for reassembly and coordinated installation.

C. Cut, drill, and punch metals cleanly and accurately. Remove burrs and ease edges to a radius of approximately 1/32 inch unless otherwise indicated. Remove sharp or rough areas on exposed surfaces.

D. Form bent-metal corners to smallest radius possible without causing grain separation or otherwise impairing work.

E. Weld connections to comply with the following:

1. Use materials and methods that minimize distortion and develop strength and corrosion resistance of base metals.
2. Obtain fusion without undercut or overlap.
3. Remove welding flux immediately.
4. Weld exposed corners and seams continuously unless otherwise indicated.
5. At exposed connections, finish exposed welds to comply with NOMMA's "Voluntary Joint Finish Standards" for Type 3 welds: partially dressed weld with spatter removed.

F. Form exposed connections with hairline joints, flush and smooth, using concealed fasteners where possible. Locate joints where least conspicuous.

2.6 FABRICATION OF STEEL-FRAMED STAIRS

A. NAAMM Stair Standard: Comply with NAAMM AMP 510, "Metal Stairs Manual," for Commercial Class, unless more stringent requirements are indicated.

B. Stair Framing:

1. Fabricate stringers of steel plates or channels.

   a. Provide closures for exposed ends of channel stringers.
   b. Finish: Shop primed.

2. Construct platforms of steel plate or channel headers and miscellaneous framing members as needed to comply with performance requirements.
3. Weld stringers to headers; weld framing members to stringers and headers
4. Where stairs are enclosed by gypsum board assemblies, provide hanger rods or struts to support landings from floor construction above or below.
   a. Locate hanger rods and struts where they do not encroach on required stair width and are within the fire-resistance-rated stair enclosure.

5. Where masonry walls support metal stairs, provide temporary supporting struts designed for erecting steel stair components before installing masonry.

C. Metal Pan Stairs: Form risers, subtread pans, and subplatforms to configurations shown from steel sheet of thickness needed to comply with performance requirements, but not less than 0.067 inch.

1. At Contractor's option, provide stair assemblies with metal pan subtreads filled with reinforced concrete during fabrication.

2.7 STAIR RAILINGS

A. As specified in Section 055213 "Pipe and Tube Railings."

2.8 FINISHES

A. Comply with NAAMM's "Metal Finishes Manual for Architectural and Metal Products" for recommendations for applying and designating finishes.

B. Finish metal stairs after assembly.

C. Preparation for Shop Priming: Prepare uncoated ferrous-metal surfaces to comply with SSPC-SP 3, "Power Tool Cleaning."

D. Apply shop primer to uncoated surfaces of metal stair components, except those with galvanized finishes and those to be embedded in concrete or masonry unless otherwise indicated. Comply with SSPC-PA 1, "Paint Application Specification No. 1: Shop, Field, and Maintenance Painting of Steel," for shop painting.

PART 3 - EXECUTION

3.1 INSTALLING METAL PAN STAIRS

A. Fastening to In-Place Construction: Provide anchorage devices and fasteners where necessary for securing metal stairs to in-place construction. Include threaded fasteners for concrete and masonry inserts, through-bolts, lag bolts, and other connectors.

B. Cutting, Fitting, and Placement: Perform cutting, drilling, and fitting required for installing metal stairs. Set units accurately in location, alignment, and elevation, measured from established lines and levels and free of rack.

C. Install metal stairs by welding stair framing to steel structure or to weld plates cast into concrete unless otherwise indicated.

D. Provide temporary bracing or anchors in formwork for items that are to be built into concrete, masonry, or similar construction.

E. Fit exposed connections accurately together to form hairline joints. Weld connections that are not to be left as exposed joints.

1. Weld connections that are not to be left as exposed joints but cannot be shop welded because of shipping size limitations.
2. Do not weld, cut, or abrade surfaces of exterior units that have been hot-dip galvanized after fabrication and are for bolted or screwed field connections.
3. Comply with requirements for welding in "Fabrication, General" Article.

F. Place and finish concrete fill for treads and platforms to comply with Section 033000 "Cast-in-Place Concrete."

1. Install abrasive nosings with anchors fully embedded in concrete.
2. Center nosings on tread width.

3.2 ADJUSTING AND CLEANING

A. Touchup Painting: Immediately after erection, clean field welds, bolted connections, and abraded areas of shop paint, and paint exposed areas with same material as used for shop painting to comply with SSPC-PA 1 for touching up shop-painted surfaces.

END OF SECTION

SECTION 055213

PIPE AND TUBE RAILINGS

PART 1 - GENERAL

1.1 RELATED DOCUMENTS

A. Drawings and general provisions of the Contract, including General and Supplementary Conditions and Division 01 Specification Sections, apply to this Section.

1.2 SUMMARY

A. Section Includes:

1. Interior steel pipe railings.
2. Exterior aluminum tube railings.

B. Related Sections:

1. Division 06 Section "Miscellaneous Rough Carpentry" for wood blocking for anchoring railings.

1.3 COORDINATION

A. Coordinate selection of shop primers with topcoats to be applied over them. Comply with paint and coating manufacturers' written recommendations to ensure that shop primers and topcoats are compatible with one another.

B. Coordinate installation of anchorages for railings. Furnish setting drawings, templates, and directions for installing anchorages, including sleeves, concrete inserts, anchor bolts, and items with integral anchors, that are to be embedded in concrete or masonry. Deliver such items to Project site in time for installation.

C. Schedule installation so wall attachments are made only to completed walls. Do not support railings temporarily by any means that do not satisfy structural performance requirements.

1.4 ACTION SUBMITTALS

A. Product Data: For the following:

1. Manufacturer's product lines of mechanically connected railings.
2. Railing brackets.
3. Grout, anchoring cement, and paint products.

B. Shop Drawings: Include plans, elevations, sections, details, and attachments to other work.

C. Samples for Initial Selection: For products involving selection of color, texture, or design, including mechanical finishes.

D. Samples for Verification: For each type of exposed finish required.

1. Sections of each distinctly different linear railing member, including handrails, top rails, posts, and balusters.
2. Fittings and brackets.
3. Assembled Sample of railing system, made from full-size components, including top rail, post, handrail, and infill. Sample need not be full height.

a. Show method of connecting members at intersections.

E. Delegated-Design Submittal: For railings, including analysis data signed and sealed by the qualified professional engineer responsible for their preparation.

1.5 INFORMATIONAL SUBMITTALS

A. Qualification Data: For testing agency.

B. Welding certificates.

C. Paint Compatibility Certificates: From manufacturers of topcoats applied over shop primers certifying that shop primers are compatible with topcoats.

D. Product Test Reports: For pipe and tube railings, for tests performed by a qualified testing agency, according to ASTM E 894 and ASTM E 935.

E. Evaluation Reports: For post-installed anchors, from ICC-ES.

1.6 QUALITY ASSURANCE

A. Welding Qualifications: Qualify procedures and personnel according to the following:

1. AWS D1.1/D1.1M, "Structural Welding Code - Steel."
2. AWS D1.2/D1.2M, "Structural Welding Code - Aluminum."

1.7 DELIVERY, STORAGE, AND HANDLING

A. Protect mechanical finishes on exposed surfaces from damage by applying a strippable, temporary protective covering before shipping.

1.8 FIELD CONDITIONS

A. Field Measurements: Verify actual locations of walls and other construction contiguous with metal fabrications by field measurements before fabrication.

PART 2 - PRODUCTS

2.1 PERFORMANCE REQUIREMENTS

A. Delegated Design: Engage a qualified professional engineer, as defined in Section 014000 "Quality Requirements," to design railings, including attachment to building construction.

B. Structural Performance: Railings, including attachment to building construction, shall withstand the effects of gravity loads and the following loads and stresses within limits and under conditions indicated:

1. Handrails and Top Rails of Guards:

a. Uniform load of 50 lbf/ ft.applied in any direction.
b. Concentrated load of 200 lbf applied in any direction.
c. Uniform and concentrated loads need not be assumed to act concurrently.

2. Infill of Guards:

a. Concentrated load of 50 lbf applied horizontally on an area of 1 sq. ft.
b. Infill load and other loads need not be assumed to act concurrently.

C. Thermal Movements: Allow for thermal movements from ambient and surface temperature changes.

1. Temperature Change: 120 deg F, ambient; 180 deg F, material surfaces.

2.2 METALS, GENERAL

A. Metal Surfaces, General: Provide materials with smooth surfaces, without seam marks, roller marks, rolled trade names, stains, discolorations, or blemishes.

B. Brackets, Flanges, and Anchors: Cast or formed metal of same type of material and finish as supported rails unless otherwise indicated.

2.3 STEEL AND IRON

A. Pipe: ASTM A 53/A 53M, Type F or Type S, Grade A, Standard Weight (Schedule 40), unless another grade and weight are required by structural loads.

B. Plates, Shapes, and Bars: ASTM A 36/A 36M.

2.4 ALUMINUM

A. Aluminum, General: Provide alloy and temper recommended by aluminum producer and finisher for type of use and finish indicated, and with not less than the strength and durability properties of alloy and temper designated below for each aluminum form required.

B. Extruded Bars and Tubing: ASTM B 221, Alloy 6063-T5/T52.

C. Drawn Seamless Tubing: ASTM B 210, Alloy 6063-T832.

D. Plate and Sheet: ASTM B 209, Alloy 6061-T6.

E. Die and Hand Forgings: ASTM B 247, Alloy 6061-T6.

F. Castings: ASTM B 26/B 26M, Alloy A356.0-T6.

2.5 FASTENERS

A. General: Provide the following:

1. Ungalvanized-Steel Railings: Plated steel fasteners complying with ASTM B 633 or ASTM F 1941, Class Fe/Zn 5 for zinc coating.
2. Aluminum Railings: Type 316 stainless-steel fasteners.

B. Fasteners for Anchoring Railings to Other Construction: Select fasteners of type, grade, and class required to produce connections suitable for anchoring railings to other types of construction indicate and capable of withstanding design loads.

C. Fasteners for Interconnecting Railing Components:

1. Provide concealed fasteners for interconnecting railing components and for attaching them to other work, unless otherwise indicated.
2. Provide tamper-resistant flat-head machine screws for exposed fasteners unless otherwise indicated.

D. Post-Installed Anchors: Torque-controlled expansion anchors or chemical anchor capable of sustaining, without failure, a load equal to six times the load imposed when installed in unit masonry and four times the load imposed when installed in concrete, as determined by testing according to ASTM E 488, conducted by a qualified independent testing agency.

1. Material for Interior Locations: Carbon-steel components zinc-plated to comply with ASTM B 633 or ASTM F 1941, Class Fe/Zn 5, unless otherwise indicated.

2.6 MISCELLANEOUS MATERIALS

A. Welding Rods and Bare Electrodes: Select according to AWS specifications for metal alloy welded.

1. For aluminum railings, provide type and alloy as recommended by producer of metal to be welded and as required for color match, strength, and compatibility in fabricated items.

B. Universal Shop Primer: Fast-curing, lead- and chromate-free, universal modified-alkyd primer complying with MPI#79 and compatible with topcoat.

1. Use primer containing pigments that make it easily distinguishable from zinc-rich primer.

C. Epoxy Zinc-Rich Primer: Complying with MPI#20 and compatible with topcoat.

D. Bituminous Paint: Cold-applied asphalt emulsion complying with ASTM D 1187.

E. Nonshrink, Nonmetallic Grout: Factory-packaged, nonstaining, noncorrosive, nongaseous grout complying with ASTM C 1107. Provide grout specifically recommended by manufacturer for interior and exterior applications.

F. Anchoring Cement: Factory-packaged, nonshrink, nonstaining, hydraulic-controlled expansion cement formulation for mixing with water at Project site to create pourable anchoring, patching, and grouting compound.

1. Water-Resistant Product: Where indicated provide formulation that is resistant to erosion from water exposure without needing protection by a sealer or waterproof coating and that is recommended by manufacturer for exterior use.

2.7 FABRICATION

A. General: Fabricate railings to comply with requirements indicated for design, dimensions, member sizes and spacing, details, finish, and anchorage, but not less than that required to support structural load.

B. Shop assemble railings to greatest extent possible to minimize field splicing and assembly. Disassemble units only as necessary for shipping and handling limitations. Clearly mark units for reassembly and coordinated installation. Use connections that maintain structural value of joined pieces.

C. Cut, drill, and punch metals cleanly and accurately. Remove burrs and ease edges to a radius of approximately 1/32 inch unless otherwise indicated. Remove sharp or rough areas on exposed surfaces.

D. Form work true to line and level with accurate angles and surfaces.

E. Fabricate connections that will be exposed to weather in a manner to exclude water. Provide weep holes where water may accumulate.

F. Cut, reinforce, drill, and tap as indicated to receive finish hardware, screws, and similar items.

G. Connections: Fabricate railings with either welded or nonwelded connections unless otherwise indicated.

H. Welded Connections: Cope components at connections to provide close fit, or use fittings designed for this purpose. Weld all around at connections, including at fittings.

1. Use materials and methods that minimize distortion and develop strength and corrosion resistance of base metals.
2. Obtain fusion without undercut or overlap.
3. Remove flux immediately.
4. At exposed connections, finish exposed surfaces smooth and blended so no roughness shows after finishing and welded surface matches contours of adjoining surfaces.

I. Nonwelded Connections: Connect members with concealed mechanical fasteners and fittings. Fabricate members and fittings to produce flush, smooth, rigid, hairline joints.

1. Fabricate splice joints for field connection using an epoxy structural adhesive if this is manufacturer's standard splicing method.

J. Form changes in direction as follows:

1. As detailed.

K. Close exposed ends of railing members with prefabricated end fittings.

L. Provide wall returns at ends of wall-mounted handrails unless otherwise indicated. Close ends of returns unless clearance between end of rail and wall is 1/4 inch or less.

M. Brackets, Flanges, Fittings, and Anchors: Provide wall brackets, flanges, miscellaneous fittings, and anchors to interconnect railing members to other work unless otherwise indicated.

1. At brackets and fittings fastened to plaster or gypsum board partitions, provide crush-resistant fillers or other means to transfer loads through wall finishes to structural supports and prevent bracket or fitting rotation and crushing of substrate.

N. Provide inserts and other anchorage devices for connecting railings to concrete or masonry work. Fabricate anchorage devices capable of withstanding loads imposed by railings. Coordinate anchorage devices with supporting structure.

O. For railing posts set in concrete, provide stainless-steel sleeves not less than 6 inches long with inside dimensions not less than 1/2 inch greater than outside dimensions of post, with metal plate forming bottom closure.

2.8 STEEL AND IRON FINISHES

A. For nongalvanized-steel railings, provide nongalvanized ferrous-metal fittings, brackets, fasteners, and sleeves; however, galvanize anchors to be embedded in exterior concrete or masonry.

B. Preparation for Shop Priming: Prepare uncoated ferrous-metal surfaces to comply with requirements indicated below:

1. Railings Indicated to Receive Zinc-Rich Primer: SSPC-SP 6/NACE No. 3, "Commercial Blast Cleaning."
2. Other Railings: SSPC-SP 3, "Power Tool Cleaning."

C. Primer Application: Apply shop primer to prepared surfaces of railings unless otherwise indicated. Comply with requirements in SSPC-PA 1, "Paint Application Specification No. 1: Shop, Field, and Maintenance Painting of Steel," for shop painting. Primer need not be applied to surfaces to be embedded in concrete or masonry.

1. Shop prime uncoated railings with universal shop primer unless zinc-rich primer is indicated.
2. Prepare for field painting as specified in Section 099123.

2.9 ALUMINUM FINISHES

A. Appearance of Finished Work: Variations in appearance of abutting or adjacent pieces are acceptable if they are within one-half of the range of approved Samples. Noticeable variations in the same piece are unacceptable. Variations in appearance of other components are acceptable if they are within the range of approved Samples and are assembled or installed to minimize contrast.

B. Clear Anodic Finish: AAMA 611, AA-M12C22A41.

PART 3 - EXECUTION

3.1 EXAMINATION

A. Examine plaster and gypsum board assemblies, where reinforced to receive anchors, to verify that locations of concealed reinforcements have been clearly marked for Installer. Locate reinforcements and mark locations if not already done.

3.2 INSTALLATION, GENERAL

A. Fit exposed connections together to form tight, hairline joints.

B. Perform cutting, drilling, and fitting required for installing railings. Set railings accurately in location, alignment, and elevation; measured from established lines and levels and free of rack.

1. Do not weld, cut, or abrade surfaces of railing components that have been coated or finished after fabrication and that are intended for field connection by mechanical or other means without further cutting or fitting.
2. Set posts plumb within a tolerance of 1/16 inch in 3 feet.
3. Align rails so variations from level for horizontal members and variations from parallel with rake of steps and ramps for sloping members do not exceed 1/4 inch in 12 feet.

C. Corrosion Protection: Coat concealed surfaces of aluminum that will be in contact with grout, concrete, masonry, wood, or dissimilar metals, with a heavy coat of bituminous paint.

1. Coat, with a heavy coat of bituminous paint, concealed surfaces of aluminum that are in contact with grout, concrete, masonry, wood, or dissimilar metals.

D. Adjust railings before anchoring to ensure matching alignment at abutting joints.

E. Fastening to In-Place Construction: Use anchorage devices and fasteners where necessary for securing railings and for properly transferring loads to in-place construction.

3.3 RAILING CONNECTIONS

A. Nonwelded Connections: Use mechanical or adhesive joints for permanently connecting railing components. Seal recessed holes of exposed locking screws using plastic cement filler colored to match finish of railings.

B. Welded Connections: Use fully welded joints for permanently connecting railing components. Comply with requirements for welded connections in "Fabrication" Article whether welding is performed in the shop or in the field.

C. Expansion Joints: Install expansion joints at locations indicated but not farther apart than required to accommodate thermal movement. Provide slip-joint internal sleeve extending 2 inches beyond joint on either side, fasten internal sleeve securely to one side, and locate joint within 6 inches of post.

3.4 ANCHORING POSTS

A. Anchor posts to metal surfaces with oval flanges, angle type, or floor type as required by conditions, connected to posts and to metal supporting members as follows:

1. For aluminum pipe railings, attach posts using fittings designed and engineered for this purpose.
2. For steel pipe railings, weld flanges to post and bolt to metal supporting surfaces.

3.5 ATTACHING RAILINGS

A. Secure wall brackets and railing end flanges to building construction as follows:

1. For concrete and solid masonry anchorage, use drilled-in expansion shields and hanger or lag bolts.
2. For hollow masonry anchorage, use toggle bolts.
3. For steel-framed partitions, use self-tapping screws fastened to steel framing or to concealed steel reinforcements.

3.6 ADJUSTING AND CLEANING

A. Clean aluminum by washing thoroughly with clean water and soap and rinsing with clean water.

B. Touchup Painting: Immediately after erection, clean field welds, bolted connections, and abraded areas of shop paint, and paint exposed areas with the same material as used for shop painting to comply with SSPC-PA 1 for touching up shop-painted surfaces.

1. Apply by brush or spray to provide a minimum 2.0-mil dry film thickness.

3.7 PROTECTION

A. Protect finishes of railings from damage during construction period with temporary protective coverings approved by railing manufacturer. Remove protective coverings at time of Substantial Completion.

END OF SECTION

SECTION 061000

ROUGH CARPENTRY

PART 1 - GENERAL

1.1 RELATED DOCUMENTS

A. Drawings and general provisions of the Contract, including General and Supplementary Conditions and Division 01 Specification Sections, apply to this Section.

1.2 SUMMARY

A. Section Includes:

1. Wood blocking, cants, and nailers.
2. Wood furring.
3. Plywood backing panels.

1.3 DEFINITIONS

A. Lumber grading agencies, and the abbreviations used to reference them, include the following:

1. NLGA: National Lumber Grades Authority.
2. SPIB: The Southern Pine Inspection Bureau.

1.4 ACTION SUBMITTALS

A. Product Data: For each type of process and factory-fabricated product. Indicate component materials and dimensions and include construction and application details.

B. Fastener Patterns: Full-size templates for fasteners in exposed framing.

C. Evaluation Reports: For the following, from ICC-ES:

1. Wood-preservative-treated wood.
2. Fire-retardant-treated wood.
3. Power-driven fasteners.
4. Powder-actuated fasteners.

1.5 QUALITY ASSURANCE

A. Testing Agency Qualifications: For testing agency providing classification marking for fire-retardant treated material, an inspection agency acceptable to authorities having jurisdiction that periodically performs inspections to verify that the material bearing the classification marking is representative of the material tested.

1.6 DELIVERY, STORAGE, AND HANDLING

A. Stack lumber flat with spacers beneath and between each bundle to provide air circulation. Protect lumber from weather by covering with waterproof sheeting, securely anchored. Provide for air circulation around stacks and under coverings.

PART 2 - PRODUCTS

2.1 WOOD PRODUCTS, GENERAL

A. All composite wood and agrifiber products included under this section shall contain no added urea formaldehyde resins.

B. Lumber: DOC PS 20 and applicable rules of grading agencies indicated. If no grading agency is indicated, provide lumber that complies with the applicable rules of any rules-writing agency certified by the ALSC Board of Review. Provide lumber graded by an agency certified by the ALSC Board of Review to inspect and grade lumber under the rules indicated.

1. Factory mark each piece of lumber with grade stamp of grading agency.

C. Maximum Moisture Content of Lumber: 19 percent unless otherwise indicated.

2.2 WOOD-PRESERVATIVE-TREATED LUMBER

A. Preservative Treatment by Pressure Process: AWPA U1; Use Category UC2 for interior construction not in contact with the ground, Use Category UC3b for exterior construction not in contact with the ground, and Use Category UC4a for items in contact with the ground.

1. Preservative Chemicals: Acceptable to authorities having jurisdiction and containing no arsenic or chromium.
2. For exposed items indicated to receive a stained or natural finish, use chemical formulations that do not require incising, contain colorants, bleed through, or otherwise adversely affect finishes.

B. Kiln-dry lumber after treatment to a maximum moisture content of 19 percent. Do not use material that is warped or that does not comply with requirements for untreated material.

C. Mark lumber with treatment quality mark of an inspection agency approved by the ALSC Board of Review.

1. For exposed lumber indicated to receive a stained or natural finish, mark end or back of each piece or omit marking and provide certificates of treatment compliance issued by inspection agency.

D. Application: Treat items indicated on Drawings, and the following:

1. Wood cants, nailers, curbs, equipment support bases, blocking, stripping, and similar members in connection with roofing, flashing, vapor barriers, and waterproofing.
2. Wood sills, blocking, furring, and similar concealed members in contact with masonry or concrete.
3. Wood framing and furring attached directly to the interior of below-grade exterior masonry or concrete walls.

4. Wood framing members that are less than 18 inches above the ground in crawlspaces or unexcavated areas.

2.3 FIRE-RETARDANT-TREATED MATERIALS

A. General: Where fire-retardant-treated materials are indicated, use materials complying with requirements in this article, that are acceptable to authorities having jurisdiction, and with fire-test-response characteristics specified as determined by testing identical products per test method indicated by a qualified testing agency.

B. Fire-Retardant-Treated Lumber and Plywood by Pressure Process: Products with a flame spread index of 25 or less when tested according to ASTM E84, and with no evidence of significant progressive combustion when the test is extended an additional 20 minutes, and with the flame front not extending more than 10.5 feet beyond the centerline of the burners at any time during the test.

1. Use treatment that does not promote corrosion of metal fasteners.
2. Exterior Type: Treated materials shall comply with requirements specified above for fire-retardant-treated lumber and plywood by pressure process after being subjected to accelerated weathering according to ASTM D2898. Use for exterior locations and where indicated.
3. Interior Type A: Treated materials shall have a moisture content of 28 percent or less when tested according to ASTM D3201 at 92 percent relative humidity. Use where exterior type is not indicated.
4. Design Value Adjustment Factors: Treated lumber shall be tested according ASTM D5664 and design value adjustment factors shall be calculated according to ASTM D6841.

C. Kiln-dry lumber after treatment to a maximum moisture content of 19 percent. Kiln-dry plywood after treatment to a maximum moisture content of 15 percent.

D. Identify fire-retardant-treated wood with appropriate classification marking of qualified testing agency.

1. For exposed lumber indicated to receive a stained or natural finish, mark end or back of each piece or omit marking and provide certificates of treatment compliance issued by testing agency.

E. Application: Treat items indicated on Drawings, and the following:

1. Concealed blocking.
2. Roof construction.
3. Plywood backing panels.

2.4 MISCELLANEOUS LUMBER

A. General: Provide miscellaneous lumber indicated and lumber for support or attachment of other construction, including the following:

1. Blocking.
2. Nailers.
3. Rooftop equipment bases and support curbs.
4. Cants.

5. Furring.

B. For blocking and nailers used for attachment of other construction, select and cut lumber to eliminate knots and other defects that will interfere with attachment of other work.

C. For furring strips for installing plywood or hardboard paneling, select boards with no knots capable of producing bent-over nails and damage to paneling.

2.5 PLYWOOD BACKING PANELS

A. Equipment Backing Panels: DOC PS1, Exterior, A-C plugged, fire-retardant treated, in thickness indicated or, if not indicated, not less than 1/2-inch nominal thickness.

2.6 FASTENERS

A. General: Provide fasteners of size and type indicated that comply with requirements specified in this article for material and manufacture.

1. Where rough carpentry is exposed to weather, in ground contact, pressure-preservative treated, or in area of high relative humidity, provide fasteners of Type 304 stainless steel.

B. Nails, Brads, and Staples: ASTM F1667.

C. Power-Driven Fasteners: NESNER-272.

D. Wood Screws: ASME B18.6.1.

E. Screws for Fastening to Metal Framing:

1. Cold-Formed Metal Framing: ASTM C 954.
2. Other Metal Framing: ASTM C 1002.

F. Lag Bolts: ASME B18.2.1.

G. Bolts: Steel bolts complying with ASTM A307, Grade A; with ASTM A563 hex nuts and, where indicated, flat washers.

H. Expansion Anchors: Anchor bolt and sleeve assembly of material indicated below with capability to sustain, without failure, a load equal to six times the load imposed when installed in unit masonry assemblies and equal to four times the load imposed when installed in concrete as determined by testing per ASTM E488 conducted by a qualified independent testing and inspecting agency.

1. Material: Carbon-steel components, zinc plated to comply with ASTM B633, ClassFe/Zn5.
2. Material: Stainless steel with bolts and nuts complying with ASTM F593 and ASTM F594, Alloy Group1 or 2.

2.7 METAL FRAMING ANCHORS

A. Galvanized-Steel Sheet: Hot-dip, zinc-coated steel sheet complying with ASTM A 653/A 653M, G60 coating designation.

1. Use for interior locations unless otherwise indicated.

B. Stainless-Steel Sheet: ASTM A 666, Type 316.

1. Use for exterior locations and where indicated.
2. Use for wood-preservative-treated lumber and where indicated.

2.8 MISCELLANEOUS MATERIALS

A. Sill-Sealer Gaskets: Closed-cell neoprene foam, 1/4-inch-thick, selected from manufacturer's standard widths to suit width of sill members indicated.

PART 3 - EXECUTION

3.1 INSTALLATION, GENERAL

A. Set rough carpentry to required levels and lines, with members plumb, true to line, cut, and fitted. Fit rough carpentry to other construction; scribe and cope as needed for accurate fit. Locate furring, nailers, blocking, grounds, and similar supports to comply with requirements for attaching other construction.

B. Install plywood backing panels by fastening to studs; coordinate locations with utilities requiring backing panels. Install fire-retardant treated plywood backing panels with classification marking of testing agency exposed to view.

C. Install metal framing anchors to comply with manufacturer's written instructions. Install fasteners through each fastener hole.

D. Install sill sealer gasket to form continuous seal between sill plates and foundation walls.

E. Provide blocking and framing as indicated and as required to support facing materials, fixtures, specialty items, and trim.

F. Provide fire blocking in furred spaces, stud spaces, and other concealed cavities as indicated.

G. Sort and select lumber so that natural characteristics will not interfere with installation or with fastening other materials to lumber. Do not use materials with defects that interfere with function of member or pieces that are too small to use with minimum number of joints or optimum joint arrangement.

H. Securely attach rough carpentry work to substrate by anchoring and fastening as indicated, complying with the following:

1. Table 2304.9.1, "Fastening Schedule," in ICC's International Building Code.

I. Use steel common nails unless otherwise indicated. Select fasteners of size that will not fully penetrate members where opposite side will be exposed to view or will receive finish materials. Make tight connections between members. Install fasteners without splitting wood. Drive nails snug but do not countersink nail heads unless otherwise indicated.

3.2 WOOD BLOCKING AND NAILER INSTALLATION

A. Install where indicated and where required for screeding or attaching other work. Form to shapes indicated and cut as required for true line and level of attached work. Coordinate locations with other work involved.

B. Attach items to substrates to support applied loading. Recess bolts and nuts flush with surfaces unless otherwise indicated.

C. Where wood-preservative-treated lumber is installed adjacent to any metal (deck, studs, steel, etc.), install continuous flexible flashing separator between wood and metal.

3.3 WOOD FURRING INSTALLATION

A. Install level and plumb with closure strips at edges and openings. Shim with wood as required for tolerance of finish work.

B. Furring to Receive Gypsum Board: Install 1-by-2-inch nominal- size furring vertically at 16 inches o.c.

3.4 PROTECTION

A. Protect wood that has been treated with inorganic boron (SBX) from weather. If, despite protection, inorganic boron-treated wood becomes wet, apply EPA-registered borate treatment. Apply borate solution by spraying to comply with EPA-registered label.

B. Protect rough carpentry from weather. If, despite protection, rough carpentry becomes wet enough that moisture content exceeds that specified, apply EPA-registered borate treatment. Apply borate solution by spraying to comply with EPA-registered label.

END OF SECTION

SECTION 061600

SHEATHING

PART 1 - GENERAL

1.1 RELATED DOCUMENTS

A. Drawings and general provisions of the Contract, including General and Supplementary Conditions and Division 01 Specification Sections, apply to this Section.

1.2 SUMMARY

A. Section Includes:

1. Wall sheathing.
2. Roof sheathing.
3. Composite nail base insulated roof sheathing.
4. Parapet sheathing.
5. Sheathing joint and penetration treatment.

1.3 ACTION SUBMITTALS

A. Product Data: For each type of process and factory-fabricated product. Indicate component materials and dimensions and include construction and application details.

1. Include data for fire-retardant treatment from chemical treatment manufacturer and certification by treating plant that treated plywood complies with requirements. Include physical properties of treated materials.
2. For fire-retardant treatments, include physical properties of treated plywood both before and after exposure to elevated temperatures, based on testing by a qualified independent testing agency according to ASTM D 5516.
3. For products receiving waterborne treatment, include statement that moisture content of treated materials was reduced to levels specified before shipment to Project site.

1.4 INFORMATIONAL SUBMITTALS

A. Evaluation Reports: For the following, from ICC-ES:

1. Fire-retardant-treated plywood.

1.5 QUALITY ASSURANCE

A. Testing Agency Qualifications: For testing agency providing classification marking for fire-retardant-treated material, an inspection agency acceptable to authorities having jurisdiction that periodically performs inspections to verify that the material bearing the classification marking is representative of the material tested.

1.6 DELIVERY, STORAGE, AND HANDLING

A. Stack panels flat with spacers beneath and between each bundle to provide air circulation. Protect sheathing from weather by covering with waterproof sheeting, securely anchored. Provide for air circulation around stacks and under coverings.

PART 2 - PRODUCTS

2.1 PERFORMANCE REQUIREMENTS

A. Fire-Resistance Ratings: As tested according to ASTM E 119; testing by a qualified testing agency. Identify products with appropriate markings of applicable testing agency.

1. Fire-Resistance Ratings: Indicated by design designations from UL's "Fire Resistance Directory" or from the listings of another qualified testing agency.

2.2 WOOD PANEL PRODUCTS

A. Thickness: As needed to comply with requirements specified, but not less than thickness indicated.

B. Factory mark panels to indicate compliance with applicable standard.

2.3 FIRE-RETARDANT-TREATED PLYWOOD

A. General: Where fire-retardant-treated materials are indicated, use materials complying with requirements in this article that are acceptable to authorities having jurisdiction and with fire-test-response characteristics specified as determined by testing identical products per test method indicated by a qualified testing agency.

B. Fire-Retardant-Treated Plywood by Pressure Process: Products with a flame-spread index of 25 or less when tested according to ASTM E 84, and with no evidence of significant progressive combustion when the test is extended an additional 20 minutes, and with the flame front not extending more than 10.5 feet beyond the centerline of the burners at any time during the test.

1. Use treatment that does not promote corrosion of metal fasteners.
2. Exterior Type: Treated materials shall comply with requirements specified above for fire-retardant-treated plywood by pressure process after being subjected to accelerated weathering according to ASTM D 2898. Use for exterior locations and where indicated.
3. Interior Type A: Treated materials shall have a moisture content of 28 percent or less when tested according to ASTM D 3201/D 3201M at 92 percent relative humidity. Use where exterior type is not indicated.
4. Design Value Adjustment Factors: Treated lumber plywood shall be tested according to ASTM D 5516 and design value adjustment factors shall be calculated according to ASTM D 6305. Span ratings after treatment shall be not less than span ratings specified. For roof sheathing and where high-temperature fire-retardant treatment is indicated, span ratings for temperatures up to 170 deg F shall be not less than span ratings specified.

C. Kiln-dry material after treatment to a maximum moisture content of 15 percent. Do not use material that is warped or does not comply with requirements for untreated material.

D. Identify fire-retardant-treated plywood with appropriate classification marking of qualified testing agency.

E. Application: Treat all plywood unless otherwise indicated.

2.4 WALL SHEATHING

A. Plywood Sheathing: DOC PS 1, Exterior, Structural I sheathing.

1. Span Rating: Not less than 16/0 unless indicated otherwise on the drawings.
2. Thickness: As indicated on the drawings

B. Glass-Mat Gypsum Sheathing: ASTM C 1177/1177M.

1. Manufacturers: Subject to compliance with requirements, provide products by one of the following:

a. CertainTeed Corporation.
b. Continental Building Products, LLC.
c. Georgia-Pacific Gypsum LLC.
d. National Gypsum Company.
e. Temple-Inland Building Products by Georgia-Pacific.
f. USG Corporation.

2. Type and Thickness: As indicated on the drawings.
3. Size: 48 by 96 inches for vertical installation.

2.5 ROOF SHEATHING

A. Plywood Sheathing: Exterior, Structural I sheathing.

1. Span Rating: Not less than 16/0 unless indicated otherwise on the drawings.
2. Thickness: As indicated on the drawings.

2.6 COMPOSITE NAIL BASE INSULATED ROOF SHEATHING

A. Vented, Oriented-Strand-Board-Surfaced, Polyisocyanurate-Foam Sheathing: Rigid, cellular, polyisocyanurate thermal insulation complying with ASTM C 1289, Type II, Class 1, with oriented strand board adhered to spacers on one face.

1. Manufacturers: Subject to compliance with requirements, provide products by one of the following:

a. Atlas Roofing Corporation.
b. Cornell Corporation.
c. Dow Chemical Company (The).
d. Johns Manville; Berkshire Hathaway Inc.
e. Rmax, Inc.

2. Polyisocyanurate-Foam Thickness: As indicated on the drawings.
3. Oriented-Strand-Board Nominal Thickness: As indicated on the drawings.

4. Spacers: Wood furring strips or blocks not less than 3/4 inch thick and spaced not more than 12 inches o.c. unless indicated otherwise.

2.7 PARAPET SHEATHING

A. Glass-Mat Gypsum Sheathing: ASTM C 1177/1177M.

1. Manufacturers: Subject to compliance with requirements, provide products by one of the following:

   a. CertainTeed Corporation.
   b. Continental Building Products, LLC.
   c. Georgia-Pacific Gypsum LLC.
   d. National Gypsum Company.
   e. Temple-Inland Building Products by Georgia-Pacific.
   f. USG Corporation.

2. Type and Thickness: As indicated on the drawings.
3. Size: 48 by 96 inches for vertical installation.

2.8 FASTENERS

A. General: Provide fasteners of size and type indicated that comply with requirements specified in this article for material and manufacture.

1. For roof, parapet, and wall sheathing, provide fasteners of Type 304 stainless steel.

B. Nails, Brads, and Staples: ASTM F 1667.

C. Power-Driven Fasteners: Fastener systems with an evaluation report acceptable to authorities having jurisdiction, based on ICC-ES AC70.

D. Screws for Fastening Wood Structural Panels to Cold-Formed Metal Framing: ASTM C 954, except with wafer heads and reamer wings, length as recommended by screw manufacturer for material being fastened.

E. Screws for Fastening Gypsum Sheathing to Cold-Formed Metal Framing: Steel drill screws, in length recommended by sheathing manufacturer for thickness of sheathing to be attached.

1. For steel framing less than 0.0329-inch-thick, use screws that comply with ASTM C 1002.
2. For steel framing from 0.033 to 0.112-inch-thick, use screws that comply with ASTM C 954.

F. Screws for Fastening Composite Nail Base Insulated Roof Sheathing to Metal Roof Deck: Steel drill screws, in type and length recommended by sheathing manufacturer for thickness of sheathing to be attached, with organic-polymer or other corrosion-protective coating having a salt-spray resistance of more than 800 hours according to ASTM B 117. Provide washers or plates if recommended by sheathing manufacturer.

2.9 SHEATHING JOINT-AND-PENETRATION TREATMENT MATERIALS

A. Sealant for Glass-Mat Gypsum Sheathing: Silicone emulsion sealant complying with ASTM C 834, compatible with sheathing tape and sheathing and recommended by tape and sheathing manufacturers for use with glass-fiber sheathing tape and for covering exposed fasteners.

1. Sheathing Tape: Self-adhering glass-fiber tape, minimum 2 inches wide, 10 by 10 or 10 by 20 threads/inch, of type recommended by sheathing and tape manufacturers for use with silicone emulsion sealant in sealing joints in glass-mat gypsum sheathing and with a history of successful in-service use.

PART 3 - EXECUTION

3.1 INSTALLATION, GENERAL

A. Do not use materials with defects that impair quality of sheathing or pieces that are too small to use with minimum number of joints or optimum joint arrangement. Arrange joints so that pieces do not span between fewer than three support members.

B. Cut panels at penetrations, edges, and other obstructions of work; fit tightly against abutting construction unless otherwise indicated.

C. Securely attach to substrate by fastening as indicated, complying with the following:

1. Table 2304.9.1, "Fastening Schedule," in the ICC's International Building Code.

D. Use common wire nails unless otherwise indicated. Select fasteners of size that will not fully penetrate members where opposite side will be exposed to view or will receive finish materials. Make tight connections. Install fasteners without splitting wood.

E. Coordinate wall, parapet and roof sheathing installation with flashing and joint-sealant installation so these materials are installed in sequence and manner that prevent exterior moisture from passing through completed assembly.

F. Do not bridge building expansion joints; cut and space edges of panels to match spacing of structural support elements.

G. Coordinate sheathing installation with installation of materials installed over sheathing so sheathing is not exposed to precipitation or left exposed at end of the workday when rain is forecast.

3.2 WOOD STRUCTURAL PANEL INSTALLATION

A. General: Comply with applicable recommendations in APA Form No. E30, "Engineered Wood Construction Guide," for types of structural-use panels and applications indicated.

B. Fastening Methods: Fasten panels as indicated below:

1. Wall and Roof Sheathing:

a. Screw to cold-formed metal framing.

b. Space panels 1/8 inch apart at edges and ends.

3.3 GYPSUM SHEATHING INSTALLATION

A. Comply with GA-253 and with manufacturer's written instructions.

1. Fasten gypsum sheathing to cold-formed metal framing with screws.
2. Install panels with a 3/8-inch gap where non-load-bearing construction abuts structural elements.
3. Install panels with a 1/4-inch gap where they abut masonry or similar materials that might retain moisture, to prevent wicking.

B. Apply fasteners so heads bear tightly against face of sheathing, but do not cut into facing.

C. Horizontal Installation: Install sheathing with V-grooved edge down and tongue edge up. Interlock tongue with groove to bring long edges in contact with edges of adjacent panels without forcing. Abut ends over centers of studs, and stagger end joints of adjacent panels not less than one stud spacing. Attach at perimeter and within field of panel to each stud.

1. Space fasteners approximately 8 inches o.c. and set back a minimum of 3/8 inch from edges and ends of panels.

D. Vertical Installation: Install vertical edges centered over studs. Abut ends and edges with those of adjacent panels. Attach at perimeter and within field of panel to each stud.

1. Space fasteners approximately 8 inches o.c. and set back a minimum of 3/8 inch from edges and ends of panels.

E. Seal sheathing joints according to sheathing manufacturer's written instructions.

1. Apply glass-fiber sheathing tape to glass-mat gypsum sheathing joints and apply and trowel sealant to embed entire face of tape in sealant. Apply sealant to exposed fasteners with a trowel so fasteners are completely covered. Seal other penetrations and openings.

END OF SECTION

SECTION 062013

EXTERIOR FINISH CARPENTRY

PART 1 - GENERAL

1.1 RELATED DOCUMENTS

A. Drawings and general provisions of the Contract, including General and Supplementary Conditions and Division 01 Specification Sections, apply to this Section.

1.2 SUMMARY

A. Section Includes:

1. Manufactured exterior moldings and trim.

1.3 ACTION SUBMITTALS

A. Product Data: For each type of product indicated. Indicate component materials, dimensions, profiles, textures, and colors and include construction and application details.

B. Samples: For each exposed product and for each color and texture specified, 8 inches square in size.

1.4 INFORMATIONAL SUBMITTALS

A. Qualification Data: For Installer.

B. Product Certificates: For cementitious materials for molding and trim, from manufacturer.

C. Sample Warranties: For manufacturer's warranties.

1.5 CLOSEOUT SUBMITTALS

A. Maintenance Data: For manufactured molding and trim to include in maintenance manuals.

1.6 DELIVERY, STORAGE, AND HANDLING

A. Deliver materials in original, unopened packages with manufacturers' labels intact and clearly identifying products.

B. Store materials inside and under cover; keep them dry and protected from weather, direct sunlight, surface contamination, aging, corrosion, damaging temperatures, construction traffic, and other causes.

1. Protect insulation against ignition at all times. Do not deliver insulating materials to Project site before installation time.
2. Complete installation and concealment of molding and trim materials as rapidly as possible in each area of construction.

1.7 FIELD CONDITIONS

A. Weather Limitations: Proceed with installation only when existing and forecasted weather conditions and ambient outdoor air, humidity, and substrate temperatures permit molding and trim to be applied, dried, and cured according to manufacturers' written instructions and warranty requirements.

PART 2 - PRODUCTS

2.1 PERFORMANCE REQUIREMENTS

A. Manufactured Molding and Trim to Comply with the following:

1. Weathertightness: Resistant to water penetration from exterior.
2. System Fire Performance: Fire-resistance rating of wall assembly.
3. Structural Performance of Assembly and Components:

    a. Wind Loads: Uniform pressure as indicated on Drawings.

4. Abrasion Resistance of Finish Coat: Sample consisting of 1-inch-thick molding and trim mounted on 1/2-inch-thick gypsum board; cured for a minimum of 28 days and shows no cracking, checking, or loss of film integrity after exposure to 528 quarts of sand when tested according to ASTM D 968, Method A.
5. Mildew Resistance of Finish Coat: Sample applied to 2-by-2-inch clean glass substrate; cured for 28 days and shows no growth when tested according to ASTM D 3273 and evaluated according to ASTM D 3274.

2.2 MANUFACTURED MOLDING AND TRIM

A. Basis-of-Design Product: Subject to compliance with requirements, provide Canamould; Pre-coated Architectural Mouldings, or approved substitution.

B. Materials:

1. Molded, (Expanded) Rigid Cellular Polystyrene Board Insulation: Comply with ASTM C 578, Type I, unless otherwise noted, and the following:

    a. Flame-Spread and Smoke-Developed Indexes: 25 and 450 or less, respectively, according to ASTM E 84.
    b. Profiles and Dimension: As indicated on Drawings.

2. Reinforcing Mesh: Balanced, alkali-resistant, open-weave, glass-fiber mesh treated for compatibility with molding and trim materials.
3. Exterior Base and Finish Coating: Molding and trim manufacturer's standard lightweight polymer modified cementitious coating.

a. Texture and color as selected by Architect from manufacturers full range.

2.3 MISCELLANEOUS MATERIALS

A. Molding and Trim Adhesive: Manufacturer's standard formulation designed for indicated use; compatible with substrate.

B. Mechanical Fasteners: Molding and trim manufacturer's standard corrosion-resistant fasteners, consisting of thermal cap, standard washer and shaft attachments, and fastener indicated below; designed to resist Project's design loads; capable of pulling fastener head below surface of molding and trim insulation; and complying with the following:

1. For attachment to steel studs from 0.033 to 0.112 inch in thickness, provide steel drill screws complying with ASTM C 954.
2. For attachment to light-gage steel framing members not less than 0.0179 inch in thickness, provide steel drill screws complying with ASTM C 1002.
3. For attachment to masonry and concrete substrates, provide sheathing dowel in form of a plastic wing-tipped fastener with thermal cap, sized to fit insulation thickness indicated and to penetrate substrate to depth required to secure anchorage.

C. Flashing: Comply with requirements in Section 076200 "Sheet Metal Flashing and Trim" for flashing materials installed in exterior finish carpentry.

D. Sealants: Latex, complying with ASTM C 834 Type OP, Grade NF and with applicable requirements in Section 079200 "Joint Sealants," recommended by sealant manufacturer and manufacturer of substrates for intended application.

2.4 EXTERIOR COATING MIXING

A. Comply with molding and trim manufacturer's requirements for combining and mixing materials. Do not introduce admixtures, water, or other materials, except as recommended by molding and trim manufacturer. Mix materials in clean containers. Use materials within time period specified by molding and trim manufacturer or discard.

PART 3 - EXECUTION

3.1 EXAMINATION

A. Examine substrates, areas, and conditions, with Installer present, for compliance with requirements for installation tolerances and other conditions affecting performance of the Work.

B. Examine roof edges, wall framing, flashings, openings, substrates, and junctures at other construction for suitable conditions where molding and trim will be installed.

C. Proceed with installation only after unsatisfactory conditions have been corrected.

1. Begin coating application only after surfaces are dry.
2. Application of exterior finish coating indicates acceptance of surfaces and conditions.

3.2 PREPARATION

A. Protect contiguous work from moisture deterioration and soiling caused by application of molding and trim coating. Provide temporary covering and other protection needed to prevent spattering of exterior finish coats on other work.

B. Protect molding and trim, substrates, and wall construction behind them from inclement weather during installation. Prevent penetration of moisture behind molding and trimand deterioration of substrates.

C. Prepare and clean substrates to comply with molding and trim manufacturer's written instructions to obtain optimum bond between substrate and adhesive for molding and trim insulation.

1. Concrete Substrates: Provide clean, dry, neutral-pH substrate for molding and trim insulation installation. Verify suitability of substrate by performing bond and moisture tests recommended by molding and trim manufacturer.

3.3 INSTALLATION

A. Install molding and trim to comply with manufacturer's written instructions.

B. Install molding and trim level, plumb, true, and aligned with adjacent materials. Use concealed shims where necessary for alignment.

C. Expansion Joints: Install at locations indicated, where required by molding and trim manufacturer.

D. Adhere or fasten molding and trim to substrate in accordance with molding and trim manufacturer's instructions sand complying with performance requirements.

E. Base Coat: Apply full coverage to exposed molding and trim insulation with not less than 1/16-inch dry-coat thickness.

F. Reinforcing Mesh: Embed reinforcing mesh in wet base coat to produce wrinkle-free installation with mesh continuous at corners, overlapped not less than 2-1/2 inches or otherwise treated at joints. Do not lap reinforcing mesh within 8 inches of corners. Completely embed mesh, applying additional base-coat material if necessary, so reinforcing-mesh color and pattern are invisible.

G. Finish Coat: Apply full-thickness coverage over dry base coat, maintaining a wet edge at all times for uniform appearance, to produce a uniform finish of color and texture matching approved sample and free of cold joints, shadow lines, and texture variation.

3.4 CLEANING AND PROTECTION

A. Remove temporary covering and protection of other work. Promptly remove coating materials from window and door frames and other surfaces outside areas indicated to receive coatings over molding and trim.

B. Replace molding and trim that is damaged or does not comply with requirements.

END OF SECTION

SECTION 062023

INTERIOR FINISH CARPENTRY

PART 1 - GENERAL

1.1 RELATED DOCUMENTS

A. Drawings and general provisions of the Contract, including General and Supplementary Conditions and Division 01 Specification Sections, apply to this Section.

1.2 SUMMARY

A. Section Includes:

1. Interior standing and running trim.
2. Solid surface window stools and aprons.
3. Shelving.

1.3 DEFINITIONS

A. Lumber grading agencies, and the abbreviations used to reference them, include the following:

1. NeLMA: Northeastern Lumber Manufacturers' Association.
2. NHLA: National Hardwood Lumber Association.
3. NLGA: National Lumber Grades Authority.
4. SPIB: The Southern Pine Inspection Bureau.
5. WCLIB: West Coast Lumber Inspection Bureau.
6. WWPA: Western Wood Products Association.

B. MDF: Medium-density fiberboard.

C. MDO Plywood: Plywood with a medium-density overlay on the face.

1.4 ACTION SUBMITTALS

A. Product Data: For each type of process and factory-fabricated product. Indicate component materials, dimensions, profiles, textures, and colors and include construction and application details.

1. Include data for fire-retardant treatment from chemical treatment manufacturer and certification by treating plant that treated materials comply with requirements.
2. Include copies of warranties from chemical treatment manufacturers for each type of treatment.

B. Samples for Initial Selection: For each type of paneling indicated.

C. Samples for Verification:

1. For each species and cut of lumber and panel products with non-factory-applied finish, with 1/2 of exposed surface finished, 50 sq. in. for lumber and 8 by 10 inches for panels.

D. Research/Evaluation Reports: Showing that fire-retardant-treated wood complies with building code in effect for Project.

E. Warranty: Special warranty specified in this Section.

1.5 DELIVERY, STORAGE, AND HANDLING

A. Protect materials against weather and contact with damp or wet surfaces. Stack lumber, plywood, and other panels flat with spacers between each bundle to provide air circulation. Provide for air circulation within and around stacks and under temporary coverings.

B. Deliver interior finish carpentry materials only when environmental conditions meet requirements specified for installation areas. If interior finish carpentry materials must be stored in other than installation areas, store only where environmental conditions meet requirements specified for installation areas.

1.6 FIELD CONDITIONS

A. Environmental Limitations: Do not deliver or install interior finish carpentry materials until building is enclosed and weatherproof, wet work in space is completed and nominally dry, and HVAC system is operating and maintaining temperature and relative humidity at occupancy levels during the remainder of the construction period.

B. Do not install finish carpentry materials that are wet, moisture damaged, or mold damaged.

1. Indications that materials are wet or moisture damaged include, but are not limited to, discoloration, sagging, or irregular shape.
2. Indications that materials are mold damaged include, but are not limited to, fuzzy or splotchy surface contamination and discoloration.

PART 2 - PRODUCTS

2.1 MATERIALS, GENERAL

A. Lumber: DOC PS 20 and applicable grading rules of inspection agencies certified by ALSC's Board of Review.

1. Factory mark each piece of lumber with grade stamp of inspection agency indicating grade, species, moisture content at time of surfacing, and mill.
2. For exposed lumber, mark grade stamp on end or back of each piece, or omit grade stamp and provide certificates of grade compliance issued by inspection agency.

B. Softwood Plywood: DOC PS 1.

C. MDF: ANSI A208.2, Grade 130.

2.2 FIRE-RETARDANT-TREATED MATERIALS

A. Lumber: Comply with performance requirements in AWPA C20, Interior Type A. Kiln dry after treatment to a maximum moisture content of 19 percent.

B. Plywood: Comply with performance requirements in AWPA C27, Interior Type A. Kiln dry after treatment to a maximum moisture content of 15 percent.

C. For exposed items indicated to receive a stained or natural finish, use chemical formulations that do not contain colorants and provide materials that do not have marks from spacer sticks on the exposed face.

D. Do not use material that does not comply with requirements for untreated material or is warped or discolored.

E. Identify fire-retardant-treated wood with appropriate classification marking of testing and inspecting agency acceptable to authorities having jurisdiction.

1. For exposed lumber indicated to receive a stained or natural finish, mark end or back of each piece or omit marking and provide certificates of treatment compliance issued by inspection agency.
2. For exposed plywood indicated to receive a stained or natural finish, mark back of each piece.

F. Application: Where indicated at locations for wood framed fire rated assemblies.

2.3 STANDING AND RUNNING TRIM

A. Lumber Trim for Opaque Finish (Painted):

1. Species and Grade: Douglas fir-larch or Douglas fir south, Prime or D finish; NLGA, WCLIB, or WWPA.
2. Finger Jointing: Allowed.
3. Face Surface: Surfaced (smooth)
4. Optional Material: Primed MDF of same actual dimensions as lumber indicated may be used in lieu of lumber.

2.4 SOLID SURFACE WINDOW STOOLS AND APRONS

A. Solid Surface Material: Homogeneous-filled plastic resin complying with ICPA SS-1.

1. Manufacturers: Subject to compliance with requirements, available manufacturers offering products that may be incorporated into the Work include, but are not limited to the following:

   a. E. I. du Pont de Nemours and Company (Corian).

2. Type: Provide Standard type unless Special Purpose type is indicated.
3. Colors and Patterns: Refer to Section 090600.

2.5 SHELVING

A. Closet Shelving: Made from the following material one of the following materials, 3/4 inch thick. Do not use products that contains urea formaldehyde.

1. Softwood Boards: Douglas fir-larch, Douglas fir south, or hem-fir; Superior or C & Btr finish; NLGA, WCLIB, or WWPA; or southern pine, B & B finish; SPIB; kiln dried.

B. Shelf Cleats: 3/4-by-3-1/2-inch boards.

C. Clothes Rods: 1-5/16-inch-diameter, aluminum tubes with end flanges for mounting on shelf cleats.

D. Rod Flanges: Aluminum.

2.6 MISCELLANEOUS MATERIALS

A. Fasteners for Interior Finish Carpentry: Nails, screws, and other anchoring devices of type, size, material, and finish required for application indicated to provide secure attachment, concealed where possible.

B. Glue: Aliphatic-resin, polyurethane, or resorcinol wood glue recommended by manufacturer for general carpentry use.

1. Use wood glue that has a VOC content of 30 g/L or less when calculated according to 40 CFR 59, Subpart D (EPA Method 24).

C. Multipurpose Construction Adhesive: Formulation complying with ASTM D 3498 that is recommended for indicated use by adhesive manufacturer.

1. Use adhesive that has a VOC content of 70 g/L or less when calculated according to 40 CFR 59, Subpart D (EPA Method 24).

2.7 FABRICATION

A. Back out or kerf backs of the following members except those with ends exposed in finished work:

1. Interior standing and running trim except shoe and crown molds.

B. Ease edges of lumber less than 1 inch in nominal thickness to 1/16-inch radius and edges of lumber 1 inch or more in nominal thickness to 1/8-inch radius.

PART 3 - EXECUTION

3.1 EXAMINATION

A. Examine substrates, with Installer present, for compliance with requirements for installation tolerances and other conditions affecting performance.

B. Examine finish carpentry materials before installation. Reject materials that are wet, moisture damaged, and mold damaged.

C. Proceed with installation only after unsatisfactory conditions have been corrected.

3.2 PREPARATION

A. Clean substrates of projections and substances detrimental to application.

B. Before installing interior finish carpentry, condition materials to average prevailing humidity in installation areas for a minimum of 24 hours unless longer conditioning is recommended by manufacturer.

3.3 INSTALLATION, GENERAL

A. Do not use materials that are unsound, warped, improperly treated or finished, inadequately seasoned, or too small to fabricate with proper jointing arrangements.

1. Do not use manufactured units with defective surfaces, sizes, or patterns.

B. Install interior finish carpentry level, plumb, true, and aligned with adjacent materials. Use concealed shims where necessary for alignment.

1. Scribe and cut interior finish carpentry to fit adjoining work. Refinish and seal cuts as recommended by manufacturer.
2. Countersink fasteners, fill surface flush, and sand where face fastening is unavoidable.
3. Install to tolerance of 1/8 inch in 96 inches for level and plumb. Install adjoining interior finish carpentry with 1/32-inch maximum offset for flush installation and 1/16-inch maximum offset for reveal installation.
4. Coordinate interior finish carpentry with materials and systems in or adjacent to it. Provide cutouts for mechanical and electrical items that penetrate interior finish carpentry.

3.4 STANDING AND RUNNING TRIM INSTALLATION

A. Install with minimum number of joints practical, using full-length pieces from maximum lengths of lumber available. Do not use pieces less than 24 inches long, except where necessary. Stagger joints in adjacent and related standing and running trim. Cope at returns and miter at corners to produce tight-fitting joints with full-surface contact throughout length of joint. Use scarf joints for end-to-end joints. Plane backs of casings to provide uniform thickness across joints where necessary for alignment.

1. Match color and grain pattern of trim for transparent finish (stain or clear finish) across joints.
2. Install trim after gypsum board joint finishing operations are completed.
3. Drill pilot holes in hardwood before fastening to prevent splitting. Fasten to prevent movement or warping. Countersink fastener heads on exposed carpentry work and fill holes.

3.5 SOLID SURFACE WINDOW STOOL AND APRON INSTALLATION

A. Install window stools and aprons in accordance with details on Drawings.

3.6 SHELVING INSTALLATION

A. Install shelf cleats by fastening to framing or backing with finish nails or trim screws, set below face and filled. Space fasteners not more than 16 inches o.c.. Use 2 fasteners at each framing member or fastener location for cleats 4 inches nominal in width and wider.

1. Apply a bead of multipurpose construction adhesive to back of shelf cleats right before installing. Remove adhesive that is squeezed out immediately after fastening shelf cleats in place.

B. Cut shelves to neatly fit openings with only enough gap to allow shelves to be removed and reinstalled. Install shelves, fully seated on cleats, brackets, and supports.

1. Fasten shelves to cleats with finish nails or trim screws, set flush.

C. Install rod flanges for rods as indicated. Fasten to shelf cleats, framing members, blocking, or metal backing, or use toggle bolts or hollow wall anchors. Install rods in rod flanges.

3.7 ADJUSTING

A. Replace interior finish carpentry that is damaged or does not comply with requirements. Interior finish carpentry may be repaired or refinished if work complies with requirements and shows no evidence of repair or refinishing. Adjust joinery for uniform appearance.

3.8 CLEANING

A. Clean interior finish carpentry on exposed and semiexposed surfaces. Touch up factory-applied finishes to restore damaged or soiled areas.

3.9 PROTECTION

A. Protect installed products from damage from weather and other causes during remainder of the construction period.

B. Remove and replace finish carpentry materials that are wet, moisture damaged, and mold damaged.

1. Indications that materials are wet or moisture damaged include, but are not limited to, discoloration, sagging, or irregular shape.
2. Indications that materials are mold damaged include, but are not limited to, fuzzy or splotchy surface contamination and discoloration.

END OF SECTION

SECTION 064023

INTERIOR ARCHITECTURAL WOODWORK

PART 1 - GENERAL

1.1 RELATED DOCUMENTS

A. Drawings and general provisions of the Contract, including General and Supplementary Conditions and Division 01 Specification Sections, apply to this Section.

1.2 SUMMARY

A. Section Includes:

1. Transaction wall at main reception desk, stage front, proscenium opening and other locations indicated on the drawings.
2. Shop finishing of interior woodwork.

1.3 ACTION SUBMITTALS

A. Product Data: For high-pressure decorative laminate, adhesive for bonding plastic laminate, cabinet hardware and accessories and finishing materials and processes.

B. Shop Drawings: Show location of each item, dimensioned plans and elevations, large-scale details, attachment devices, and other components.

1. Show details full size.
2. Show locations and sizes of furring, blocking, and hanging strips, including concealed blocking and reinforcement specified in other Sections.
3. Show locations and sizes of cutouts and holes for plumbing fixtures, faucets, soap dispensers and other items installed in architectural woodwork.

C. Samples for Initial Selection:

1. Wood stain.

1.4 INFORMATIONAL SUBMITTALS

A. Qualification Data: For Installer.

B. Product Certificates: For each type of product, signed by product manufacturer.

C. Woodwork Quality Standard Compliance Certificates: AWI Quality Certification Program certificates.

1.5 QUALITY ASSURANCE

A. Installer Qualifications: Fabricator of products including certified participant in AWI's Quality Certification Program.

B. Quality Standard: Unless otherwise indicated, comply with AWI's "Architectural Woodwork Quality Standards" for grades of interior architectural woodwork indicated for construction, finishes, installation, and other requirements.

1. Provide AWI Quality Certification Program labels and certificates indicating that woodwork, including installation, complies with requirements of grades specified.

C. Preinstallation Conference: Conduct conference at Project site to comply with requirements in Division 01 Section "Project Management and Coordination."

1.6 DELIVERY, STORAGE, AND HANDLING

A. Do not deliver woodwork until painting and similar operations that could damage woodwork have been completed in installation areas. If woodwork must be stored in other than installation areas, store only in areas where environmental conditions comply with requirements specified in "Project Conditions" Article.

1.7 PROJECT CONDITIONS

A. Environmental Limitations: Do not deliver or install woodwork until building is enclosed, wet work is complete, and HVAC system is operating and maintaining temperature and relative humidity at occupancy levels during the remainder of the construction period.

B. Environmental Limitations: Do not deliver or install woodwork until building is enclosed, wet work is complete, and HVAC system is operating and maintaining temperature between 60 and 90 deg F and relative humidity between 25 and 55 percent during the remainder of the construction period.

C. Field Measurements: Where woodwork is indicated to fit to other construction, verify dimensions of other construction by field measurements before fabrication, and indicate measurements on Shop Drawings. Coordinate fabrication schedule with construction progress to avoid delaying the Work.

1. Locate concealed framing, blocking, and reinforcements that support woodwork by field measurements before being enclosed, and indicate measurements on Shop Drawings.
2. Established Dimensions: Where field measurements cannot be made without delaying the Work, establish dimensions and proceed with fabricating woodwork without field measurements. Provide allowance for trimming at site, and coordinate construction to ensure that actual dimensions correspond to established dimensions.

1.8 COORDINATION

A. Coordinate sizes and locations of framing, blocking, furring, reinforcements, and other related units of Work specified in other Sections to ensure that interior architectural woodwork can be supported and installed as indicated.

PART 2 - PRODUCTS

2.1 MATERIALS

A. General: Provide materials that comply with requirements of AWI's quality standard for each type of woodwork and quality grade specified, unless otherwise indicated.

B. Wood Products: Comply with the following:

1. Hardboard: AHA A135.4.
2. Medium-Density Fiberboard: ANSI A208.2, Grade MD, made with binder containing no urea formaldehyde.
3. Solid maple, stained.
4. Maple-veneer plywood, stained.

2.2 MISCELLANEOUS MATERIALS

A. Furring, Blocking, Shims, and Hanging Strips: Fire-retardant-treated softwood lumber, kiln dried to less than 15 percent moisture content.

B. Anchors: Select material, type, size, and finish required for each substrate for secure anchorage. Provide nonferrous-metal or hot-dip galvanized anchors and inserts on inside face of exterior walls and elsewhere as required for corrosion resistance. Provide toothed-steel or lead expansion sleeves for drilled-in-place anchors.

C. Adhesives, General: Adhesives shall not contain urea formaldehyde.

D. VOC Limits for Installation Adhesives: Installation adhesives shall comply with the following limits for VOC content when calculated according to 40 CFR 59, Subpart D (EPA Method 24):

1. Wood Glues: 30 g/L.
2. Multipurpose Construction Adhesives: 70 g/L.
3. Contact Adhesive: 250 g/L.

2.3 FABRICATION, GENERAL

A. Interior Woodwork Grade: Unless otherwise indicated, provide Custom-grade interior woodwork complying with referenced quality standard.

B. Wood Moisture Content: Comply with requirements of referenced quality standard for wood moisture content in relation to ambient relative humidity during fabrication and in installation areas.

2.4 SHOP FINISHING

A. Grade: Provide finishes of same grades as items to be finished.

B. General: Finish architectural woodwork at fabrication shop as specified in this Section. Defer only final touchup, cleaning, and polishing until after installation.

PART 3 - EXECUTION

3.1 PREPARATION

A. Before installation, condition woodwork to average prevailing humidity conditions in installation areas.

3.2 INSTALLATION

A. Grade: Install woodwork to comply with requirements for the same grade specified in Part 2 for fabrication of type of woodwork involved.

B. Assemble woodwork and complete fabrication at Project site to comply with requirements for fabrication in Part 2, to extent that it was not completed in the shop.

C. Install woodwork level, plumb, true, and straight. Shim as required with concealed shims. Install level and plumb (including tops) to a tolerance of 1/8 inch in 96 inches.

D. Scribe and cut woodwork to fit adjoining work, refinish cut surfaces, and repair damaged finish at cuts.

E. Anchor woodwork to anchors or blocking built in or directly attached to substrates. Secure with countersunk, concealed fasteners and blind nailing as required for complete installation. Use fine finishing nails or finishing screws for exposed fastening, countersunk and filled flush with woodwork and matching final finish if transparent finish is indicated.

F. Touch up finishing work specified in this Section after installation of woodwork. Fill nail holes with matching filler where exposed.

3.3 ADJUSTING AND CLEANING

A. Repair damaged and defective woodwork, where possible, to eliminate functional and visual defects; where not possible to repair, replace woodwork. Adjust joinery for uniform appearance.

B. Clean woodwork on exposed and semiexposed surfaces. Touch up shop-applied finishes to restore damaged or soiled areas.

END OF SECTION

SECTION 071416

COLD FLUID-APPLIED WATERPROOFING

PART 1 - GENERAL

1.1 RELATED DOCUMENTS

A. Drawings and general provisions of the Contract, including General and Supplementary Conditions and Division 01 Specification Sections, apply to this Section.

1.2 SUMMARY

A. Section Includes:

1. Polyurethane waterproofing at planter.

1.3 PREINSTALLATION MEETINGS

A. Preinstallation Conference: Conduct conference at Project site.

1. Review waterproofing requirements including, but not limited to, the following:

a. Surface preparation specified in other Sections.
b. Minimum curing period.
c. Forecasted weather conditions.
d. Special details and sheet flashings.
e. Repairs.
f. Field quality control.

1.4 ACTION SUBMITTALS

A. Product Data: For each type of product.

1. Include construction details, material descriptions, and tested physical and performance properties of waterproofing.
2. Include manufacturer's written instructions for evaluating, preparing, and treating substrate.

B. Shop Drawings:

1. Show locations and extent of waterproofing.
2. Include details for substrate joints and cracks, penetrations, inside and outside corners, tie-ins with adjoining waterproofing, and other termination conditions.

C. Samples: For each exposed product and for each color and texture specified.

1.5 INFORMATIONAL SUBMITTALS

A. Qualification Data: For Installer.

B. Field quality-control reports.

C. Sample Warranties: For special warranties.

1.6 QUALITY ASSURANCE

A. Installer Qualifications: An entity that employs installers and supervisors who are trained and approved by waterproofing manufacturer.

1.7 FIELD CONDITIONS

A. Environmental Limitations: Apply waterproofing within the range of ambient and substrate temperatures recommended in writing by waterproofing manufacturer.

1. Do not apply waterproofing to a damp or wet substrate, when relative humidity exceeds 85 percent, or when temperatures are less than 5 deg F above dew point.
2. Do not apply waterproofing in snow, rain, fog or mist, or when such weather conditions are imminent during application and curing period.

B. Maintain adequate ventilation during application and curing of waterproofing materials.

1.8 WARRANTY

A. Manufacturer's Special Warranty: Manufacturer agrees to repair or replace waterproofing that fails in materials or workmanship within specified warranty period.

1. Warranty Period: Five years from date of Substantial Completion.

PART 2 - PRODUCTS

2.1 MANUFACTURERS

A. Source Limitations for Waterproofing System: Obtain waterproofing materials from single source from single manufacturer.

2.2 SINGLE-COMPONENT POLYURETHANE WATERPROOFING

A. Cold Fluid-Applied Waterproofing: Single component, reinforced, high solids, modified aliphatic polyurethane, ASTM C 836/C 836M and coal-tar free, formulated for application to damp and green concrete.

1. Basis-of-Design Product: Subject to compliance with requirements, provide Tremco Incorporated; TREMproof 250GC, or a comparable product by one of the following:

a. BASF Corp. - Construction Chemicals.

b. Carlisle Coatings & Waterproofing Inc.
c. CETCO, a Minerals Technologies company.
d. Mar-flex Waterproofing & Building Products.
e. Polyguard Products, Inc.

2. VOC Content: Less than 100 g/L, roller and self-leveling grades.
3. VOC Content: Less than 160 g/L, trowel detailing grade.
4. Hardness, ASTM D 2240: 70 – 80.
5. Low Temperature Flexibility and Crack Bridging, ASTM C 1305: Pass.
6. Adhesion in Peel, ASTM C 794: 26 lbf/in.

2.3 AUXILIARY MATERIALS

A. General: Accessory materials as described in manufacturer's written installation instructions, recommended to produce complete waterproofing system meeting performance requirements, and compatible with waterproofing material and adjacent materials.

B. Substrate Patching Material: Waterproofing manufacturer's standard trowel-grade filler material.

C. Primer: Liquid primer meeting VOC limitations and recommended for substrate by waterproofing manufacturer.

D. Elastomeric Detail Sheet: Blended thermoset elastomeric sheet reinforced with polyester woven scrim.

1. Basis of Design Product: Tremco, TRA Elastomeric Sheeting.

E. Metal Termination Bars: Waterproofing manufacturer's standard aluminum or stainless steel termination bar, with stainless steel fasteners.

F. Joint Sealant: ASTM C 719, high performance, medium-modulus, low-VOC, UV-stable, non-sag polyurethane sealant approved by waterproofing manufacturer for adhesion and compatibility with waterproofing and accessories

1. Basis of Design Product: Tremco, Dymonic 100.

PART 3 - EXECUTION

3.1 EXAMINATION

A. Examine substrates, areas, and conditions, with Installer present, for compliance with requirements and other conditions affecting performance of the Work.

1. Verify that concrete has cured and aged for minimum time period recommended in writing by waterproofing manufacturer.
2. Verify that substrate is visibly dry and within the moisture limits recommended in writing by manufacturer. Test for capillary moisture by plastic sheet method according to ASTM D 4263.

B. Proceed with installation only after unsatisfactory conditions have been corrected.

3.2 PREPARATION

A. Clean, prepare, and treat substrates according to manufacturer's written instructions. Provide clean, dust-free, and dry substrates for waterproofing application.

B. Mask off adjoining surfaces not receiving waterproofing to prevent spillage and overspray affecting other construction.

C. Close off deck drains and other deck penetrations to prevent spillage and migration of waterproofing fluids.

D. Remove grease, oil, bitumen, form-release agents, paints, curing compounds, acid residues, and other penetrating contaminants or film-forming coatings from concrete.

E. Remove fins, ridges, and other projections, and fill honeycomb, aggregate pockets, holes, and other voids.

3.3 PREPARATION AT TERMINATIONS, PENETRATIONS, AND CORNERS

A. Prepare surfaces at terminations and penetrations through waterproofing and at expansion joints, drains, sleeves, and corners according to waterproofing manufacturer's written instructions.

B. Apply waterproofing in two separate applications, and embed a joint reinforcing strip in the first preparation coat when recommended by waterproofing manufacturer.

3.4 JOINT AND CRACK TREATMENT

A. Prepare, treat, rout, and fill joints and cracks in substrate according to waterproofing manufacturer's written instructions. Before coating surfaces, remove dust and dirt from joints and cracks according to ASTM D 4258.

1. Comply with ASTM C 1193 for joint-sealant installation.
2. Apply bond breaker on sealant surface, beneath preparation strip.
3. Prime substrate along each side of joint and apply a single thickness of preparation strip at least 6 inches wide along each side of joint. Apply waterproofing in two separate applications and embed a joint reinforcing strip in the first preparation coat.

3.5 WATERPROOFING APPLICATION

A. General: Apply waterproofing material to form a seal with strips and transition strips and to achieve a continuous waterproofing according to waterproofing manufacturer's written instructions. Apply waterproofing material within manufacturer's recommended application temperature ranges.

B. Primer: Apply primer to substrates at required rate, using roller, brush, or airless spray. Allow to dry. Reprime areas not covered within 24 hours.

C. Start application with manufacturer's authorized representative present.

D. Cold Fluid-Applied Waterproofing: Apply waterproofing in total wet film thickness and with methods recommended in writing by waterproofing manufacturer.

E. High-Build Application: Horizontal:

1. Apply using roller or squeegee.
2. Apply in single pass at minimum thickness of 120 mils wet.

F. Terminations: Install terminations of waterproofing membrane in accordance with ASTM C 898 and ASTM C 1471, as applicable to application, at not less than minimum height recommended by waterproofing manufacturer. Overlap waterproofing on to intersecting construction a minimum of 24 inches.

G. Correct deficiencies in or remove waterproofing that does not comply with requirements; repair substrates and reapply waterproofing components.

3.6 FIELD QUALITY CONTROL

A. Testing Agency: Engage a qualified testing agency to perform tests and inspections:

1. Testing agency shall verify thickness of waterproofing during application.
2. Flood Testing: Flood test each deck area for leaks, according to procedures in ASTM D 5957, after completing waterproofing but before placing overlaying construction. Install temporary containment assemblies, plug or dam drains, and flood with potable water.

   a. Flood to an average depth of 2-1/2 inches with a minimum depth of 1 inch and a maximum depth of 4 inches. Maintain 2 inches of clearance from top of sheet flashings.
   b. Flood each area for 24 hours.
   c. Testing agency shall observe flood testing and examine underside of decks and terminations for evidence of leaks during flood testing.
   d. After flood testing, repair leaks, repeat flood tests, and make further repairs until waterproofing installation is watertight.

B. Manufacturer's Field Service: Engage asite representative qualified by waterproofing membrane manufacturer to inspect substrate conditions, surface preparation, membrane application, flashings, protection, and drainage components and to furnish daily reports to Architect.

C. Waterproofing will be considered defective if it does not pass tests and inspections.

D. Prepare test and inspection reports.

3.7 PROTECTION

A. Do not permit foot or vehicular traffic on unprotected membrane.

B. Protect waterproofing from damage and wear during remainder of construction period.

C. Correct deficiencies in or remove waterproofing that does not comply with requirements; repair substrates, reapply waterproofing, and repair sheet flashings.

END OF SECTION

SECTION 071700

BENTONITE WATERPROOFING

PART 1 - GENERAL

1.1 RELATED DOCUMENTS

A. Drawings and general provisions of the Contract, including General and Supplementary Conditions and Division 01 Specification Sections, apply to this Section.

1.2 SUMMARY

A. Section Includes:

1. Bentonite waterproofing for elevator pit walls and areas where exterior grade is above the floor elevation.
2. Molded-sheet drainage panels.

1.3 PREINSTALLATION MEETINGS

A. Preinstallation Conference: Conduct conference at Project site.

1.4 ACTION SUBMITTALS

A. Product Data: For each type of product.

1. Include construction details, material descriptions, and installation instructions.

B. Shop Drawings: Include installation details for waterproofing, penetrations, and interface with other work.

C. Samples: For each of the following products, in sizes indicated:

1. Waterproofing: 6 inches square.
2. Molded-Sheet Drainage Panels: 6 inches square.

1.5 INFORMATIONAL SUBMITTALS

A. Product Certificates: For each type of waterproofing material.

B. Field quality-control reports.

C. Sample Warranty: For manufacturer's special warranty.

1.6 QUALITY ASSURANCE

A. Mockups: Build mockups to set quality standards for fabrication and installation, and to represent the finished work.

1. Build mockup of installation on typical vertical surfaces 100 sq. ft. in size.
2. Approval of mockups does not constitute approval of deviations from the Contract Documents contained in mockups unless Architect specifically approves such deviations in writing.
3. Subject to compliance with requirements, approved mockups may become part of the completed Work if undisturbed at time of Substantial Completion.

1.7 FIELD CONDITIONS

A. Weather Limitations: Proceed with installation only when existing and forecasted weather conditions permit bentonite waterproofing to be installed according to manufacturer's written instructions and warranty requirements.

1. Do not apply waterproofing materials to surfaces where ice or frost is visible. Do not apply bentonite waterproofing materials in areas with standing water.
2. Do not place bentonite clay products in panel or composite form on damp surfaces unless such practice is approved in writing by manufacturer.

1.8 WARRANTY

A. Special Warranty: Manufacturer and Installer agree(s) to repair or replace components of bentonite waterproofing system that fail in materials or workmanship within specified warranty period.

1. Warranty Period: 10 years, non-prorated, from date of Substantial Completion.

PART 2 - PRODUCTS

2.1 GEOTEXTILE/BENTONITE SHEETS

A. Polyethylene-Lined Geotextile/Bentonite Sheet: Minimum of 1.0 lb/sq. ft. of bentonite clay granules between two layers of geotextile fabric, heat-fused together; and with a low-permeability polyethylene geomembrane bonded to one surface.

a. Products: Subject to compliance with requirements, provide one of the following:

1) Carlisle Coatings & Waterproofing Inc; CCW MiraCLAY GM.
2) CETCO, a Minerals Technologies company; Voltex DS.

2. Grab Tensile Strength: 95 lbf according to ASTM D 4632.
3. Puncture Resistance: 100 lbf according to ASTM D 4833.
4. Vapor Permeance: 0.03 perms according to ASTM E 96/E 96M.

2.2 MOLDED-SHEET DRAINAGE PANELS

A. Woven-Geotextile-Faced Molded-Sheet Drainage Panels: Composite subsurface drainage panel consisting of a studded, nonbiodegradable, molded-plastic-sheet drainage core; with a woven-geotextile facing with an apparent opening size not exceeding No. 40 sieve, laminated to one side of the core, with or without a polymeric film bonded to the other side; and with a horizontal flow rate of not less than 2.8 gpm per ft.

2.3 ACCESSORIES

A. Protection (Cover) Board: Rigid insulation as indicated on Drawings, and specified in Section 072100.

B. Granular Bentonite: Sodium bentonite clay containing a minimum of 90 percent montmorillonite (hydrated aluminum silicate), with a minimum of 90 percent passing a No. 20 sieve.

C. Bentonite Mastic: Bentonite compound of trowelable consistency, specifically formulated for application at joints and penetrations.

D. Bentonite Tubes: Manufacturer's standard 2-inch-diameter, water-soluble tube containing approximately 1.5 lb/ft. of granular bentonite; hermetically sealed; designed specifically for placing on wall footings at line of joint with exterior base of wall.

E. Termination Bar: Extruded-aluminum or formed-stainless-steel bars with upper flange to receive sealant.

F. Plastic Protection Sheet: Polyethylene sheeting according to ASTM D 4397; thickness as recommended in writing by waterproofing manufacturer to suit application but at least 6 mils thick.

G. Cement Grout Patching Material: Grout mix compatible with substrate being patched and recommended in writing by waterproofing manufacturer.

H. Masonry Fasteners: Case-hardened nails or hardened-steel, powder-actuated fasteners. Depending on manufacturer's written requirements, provide 1/2- or 1-inch-diameter washers under fastener heads.

I. Sealants: As recommended in writing by waterproofing manufacturer. Comply with requirements specified in Section 079200 "Joint Sealants."

J. Tapes: Waterproofing manufacturer's recommended waterproof tape for joints between sheets, membranes, or panels.

K. Adhesive: Waterproofing manufacturer's water-based adhesive used to secure waterproofing to both vertical and horizontal surfaces.

PART 3 - EXECUTION

3.1 EXAMINATION

A. Examine substrates, areas, and conditions, with Installer present, for compliance with requirements for substrate preparations and other conditions affecting performance of bentonite waterproofing.

B. Examine bentonite materials before installation. Reject materials that have been prematurely exposed to moisture.

C. Verify that substrate is complete and that work that will penetrate waterproofing is complete and rigidly installed.

D. Proceed with installation only after unsatisfactory conditions have been corrected.

3.2 PREPARATION

A. Clean, prepare, and treat substrates according to manufacturer's written instructions.

B. Formed Concrete Surfaces: Remove fins and projections. Fill voids, rock pockets, form-tie holes, and other defects with bentonite mastic or cement grout patching material according to manufacturer's written instructions.

C. Horizontal Concrete Surfaces: Remove debris, standing water, oily substances, mud, and similar substances that could impair the bonding ability of concrete or the effectiveness of waterproofing. Fill voids, cracks greater than 1/8 inch, honeycomb areas, and other defects with bentonite mastic or cement grout patching material according to manufacturer's written instructions.

D. Excavation Support and Protection System: If water is seeping, use plastic protection sheets or other suitable means to prevent wetting the bentonite waterproofing. Fill minor gaps and spaces 1/8-inch-wide or wider with wood, metal, concrete, or other appropriate filling material. Cover or fill large voids and crevices with cement mortar according to manufacturer's written instructions.

3.3 INSTALLATION, GENERAL

A. Prepare substrates, voids, cracks, and cavities; and install waterproofing and accessories according to manufacturer's written instructions.

1. Before installing, verify the correct side of waterproofing that shall face substrate surface.
2. Apply granular bentonite around penetrations in horizontal surfaces and changes in plane according to manufacturer's details in preparation for bentonite tubes and mastic.
3. Apply bentonite tubes, bentonite mastic, or both at changes of plane, construction joints in substrate, projections, and penetrations.
4. Prime concrete substrates. Primer may be omitted on concrete surfaces that comply with manufacturer's written requirements for dryness, surface texture, and freedom from imperfections.

B. Apply bentonite tubes continuously on footing against base of wall to be waterproofed.

C. Protect waterproofing from damage and wetting before and during subsequent construction operations. Repair punctures, tears, and cuts.

D. Install protection course before backfilling or placing overburden when recommended in writing by waterproofing manufacturer.

3.4 GEOTEXTILE/BENTONITE SHEET INSTALLATION

A. Install a continuous layer of waterproofing sheets directly against surface to be waterproofed. Lap ends and edges a minimum of 4 inches on horizontal and vertical substrates unless otherwise indicated. Stagger end joints between sheets a minimum of 24 inches. Fasten seams by stapling to adjacent sheet or nailing to substrate.

B. Below Structural Slabs-on-Grade: Place waterproofing sheets on compacted substrate with ends and edges lapped and stapled.

1. Install a layer of waterproofing sheets under footings, grade beams, and pile caps; or continue waterproofing through key joints between footings and foundation walls, and extend a minimum of 8 inches up or beyond perimeter slab forms.

C. Concrete Walls: Starting at bottom of wall, apply waterproofing sheets horizontally against wall. Secure with masonry fasteners spaced according to manufacturer's written instructions. Extend to bottom of footing, grade beam, or wall, and secure.

1. Termination at Grade: Extend waterproofing sheets to within 12 inches of finish grade unless otherwise indicated. Secure top edge with termination bar. Apply sealant to top edge of termination bar.
2. Termination at Grade: Fasten top edge of waterproofing sheets to wall and protect top edge with sheet metal counterflashing. Cover waterproofing with a lapped course of plastic protection sheets if backfilling does not proceed immediately.

D. Excavation Support and Protection (Permanent Shoring): Encase tieback heads, rods, nuts, and plates according to waterproofing manufacturer's written instructions for each configuration.

1. Install a layer of waterproofing sheets, with ends and edges lapped and nailed to shoring. Cover waterproofing with plastic protection sheets if needed for protection from precipitation; remove plastic sheets before placing concrete.
2. Inspect and repair waterproofing after reinforcing steel has been placed. Coordinate and control concrete placement to avoid damage to waterproofing.

3.5 MOLDED-SHEET DRAINAGE PANEL INSTALLATION

A. Place and secure molded-sheet drainage panels according to manufacturer's written instructions. Use adhesives or another method that does not penetrate waterproofing. Lap edges and ends of geotextile to maintain continuity. Protect installed molded-sheet drainage panels during subsequent construction.

1. For vertical applications, install board insulation before installing drainage panels.

3.6 FIELD QUALITY CONTROL

A. Manufacturer's Field Service: Engage a factory-authorized service representative to test and inspect completed waterproofing installation before covering with other construction, and provide written report stating that installation complies with manufacturer's written instructions.

1. Remove and replace applications of bentonite waterproofing where inspection indicates that it does not comply with specified requirements.

END OF SECTION

SECTION 071900

WATER REPELLENTS

PART 1 - GENERAL

1.1 RELATED DOCUMENTS

A. Drawings and general provisions of the Contract, including General and Supplementary Conditions and Division 01 Specification Sections, apply to this Section.

1.2 SUMMARY

A. Section includes penetrating water-repellent treatments for the following vertical and horizontal surfaces:

1. All exterior concrete masonry and precast concrete sills, lintels, wall caps or water tables.

1.3 PREINSTALLATION MEETINGS

A. Preinstallation Conference: Conduct conference at Project site.

1.4 ACTION SUBMITTALS

A. Product Data: For each type of product.

1. Include manufacturer's printed statement of VOC content.
2. Include manufacturer's recommended number of coats for each type of substrate and spreading rate for each separate coat.

B. Samples: For each type of water repellent and substrate indicated, 12 by 12 inches in size, with specified water-repellent treatment applied to half of each Sample.

1.5 INFORMATIONAL SUBMITTALS

A. Qualification Data: For Applicator.

B. Product Certificates: For each type of water repellent.

C. Sample Warranty: For special warranty.

1.6 QUALITY ASSURANCE

A. Applicator Qualifications: An employer of workers trained and approved by manufacturer.

B. Mockups: Coordinate water repellents to be used with approved masonry mockup panel.

1.7 FIELD CONDITIONS

A. Limitations: Proceed with application only when the following existing and forecasted weather and substrate conditions permit water repellents to be applied according to manufacturers' written instructions and warranty requirements:

1. Concrete surfaces and mortar have cured for not less than 28 days.
2. Building has been closed in for not less than 30 days before treating wall assemblies.
3. Ambient temperature is above 40 deg F and below 100 deg F and will remain so for 24 hours.
4. Substrate is not frozen and substrate-surface temperature is above 40 deg F and below 100 deg F.
5. Rain or snow is not predicted within 24 hours.
6. Not less than 24 hours have passed since surfaces were last wet.
7. Windy conditions do not exist that might cause water repellent to be blown onto vegetation or surfaces not intended to be treated.

1.8 WARRANTY

A. Special Warranty: Manufacturer's standard form in which manufacturer and Applicator agree(s) to repair or replace materials that fail to maintain water repellency specified in "Performance Requirements" Article within specified warranty period.

1. Warranty Period: 10 years from date of Substantial Completion.

PART 2 - PRODUCTS

2.1 PERFORMANCE REQUIREMENTS

A. Performance: Water repellents shall meet the following performance requirements as determined by preconstruction testing on manufacturer's standard substrates representing those indicated for this Project.

B. Water Absorption: Minimum 90 percent reduction of water absorption after 24 hours for treated compared to untreated specimens when tested according to the following:

1. Cast-in-Place Concrete: ASTM C 642.
2. Precast Concrete: ASTM C 642.
3. Cast Stone: ASTM C 1195.
4. Concrete Masonry Units: ASTM C 140.
5. Clay Brick: ASTM C 67.

C. Water-Vapor Transmission: Comply with one or both of the following:

1. Maximum 10 percent reduction water-vapor transmission of treated compared to untreated specimens, according to ASTM E 96/E 96M.
2. Minimum 80 percent water-vapor transmission of treated compared to untreated specimens, according to ASTM D 1653.

D. Water Penetration and Leakage through Masonry: Minimum 90 percent reduction in leakage rate of treated compared to untreated specimens, according to ASTM E 514/E 514M.

E. Durability: Maximum 5 percent loss of water-repellent performance after 2500 hours of weathering according to ASTM G 154 compared to water-repellent-treated specimens before weathering.

2.2 SILOXANE-BASED PRODUCTS

A. Manufactures/Products: Subject to compliance with requirements, available products that may be incorporated into the Work include, but are not limited to, the following:

1. PROSOCO, Inc; (800) 255-4255: “Sure Klean Weather Seal Siloxane PD”.
2. L&M Construction Chemicals; (800) 362-3331: “AQUAPEL PLUS”.

B. Materials: VOC compliant 100% reactive waterborne siloxane; colorless.

C. Locations: Use for dense surfaces such as precast concrete (cast stone).

2.3 SILANE/SILOXANE BLEND PRODUCTS

A. Manufacturers/Products: Subject to compliance with requirements, available products that may be incorporated into the Work include, but are not limited to, the following:

1. Tnemec Company (Chemprobe Coating Systems); (800) 863-6321: “Prime-A-Pell Plus”.
2. Evonik Corp; (800) 828-0919: “Protectosil AQUA-TRETE EM”

B. Materials: This Product may be substituted for the siloxane-based Products.

C. Locations: Use for dense surfaces such as precast concrete (cast stone).

PART 3 - EXECUTION

3.1 EXAMINATION

A. Examine substrates, areas, and conditions, with Applicator present, for compliance with requirements and conditions affecting performance of the Work.

1. Verify that surfaces are clean and dry according to water-repellent manufacturer's requirements. Check moisture content in three representative locations by method recommended by manufacturer.
2. Verify that there is no efflorescence or other removable residues that would be trapped beneath the application of water repellent.
3. Verify that required repairs are complete, cured, and dry before applying water repellent.

B. Test pH level according to water-repellent manufacturer's written instructions to ensure chemical bond to silica-containing or siliceous minerals.

C. Proceed with installation only after unsatisfactory conditions have been corrected.

3.2 PREPARATION

A. New Construction and Repairs: Allow concrete and other cementitious materials to age before application of water repellent, according to repellent manufacturer's written instructions.

B. Cleaning: Before application of water repellent, clean substrate of substances that could impair penetration or performance of product according to water-repellent manufacturer's written instructions and as follows:

1. Cast-in-Place Concrete, Precast Concrete, Cast Stone and Concrete Unit Masonry: Remove oil, curing compounds, laitance, and other substances that inhibit penetration or performance of water repellents according to ASTM E 1857.

C. Protect adjoining work, including mortar and sealant bond surfaces, from spillage or blow-over of water repellent. Cover adjoining and nearby surfaces of aluminum and glass if there is the possibility of water repellent being deposited on surfaces. Cover live vegetation.

D. Coordination with Mortar Joints: Do not apply water repellent until pointing mortar for joints adjacent to surfaces receiving water-repellent treatment has been installed and cured.

E. Coordination with Sealant Joints: Do not apply water repellent until sealants for joints adjacent to surfaces receiving water-repellent treatment have been installed and cured.

1. Water-repellent work may precede sealant application only if sealant adhesion and compatibility have been tested and verified using substrate, water repellent, and sealant materials identical to those required.

3.3 APPLICATION

A. Manufacturer's Field Service: Engage a factory-authorized service representative to inspect the substrate before application of water repellent and to instruct Applicator on the product and application method to be used.

B. Apply coating of water repellent on surfaces to be treated using 15 psi-pressure spray with a fan-type spray nozzle roller or brush to the point of saturation. Apply coating in dual passes of uniform, overlapping strokes. Remove excess material; do not allow material to puddle beyond saturation. Comply with manufacturer's written instructions for application procedure unless otherwise indicated.

1. Precast Concrete and Cast Stone: At Contractor's option, first application of water repellent may be completed before installing units. Mask mortar and sealant bond surfaces to prevent water repellent from migrating onto joint surfaces. Remove masking after repellent has cured.

C. Apply a second saturation coating, repeating first application. Comply with manufacturer's written instructions for limitations on drying time between coats and after rainstorm wetting of surfaces between coats. Consult manufacturer's technical representative if written instructions are not applicable to Project conditions.

3.4 CLEANING

A. Immediately clean water repellent from adjoining surfaces and surfaces soiled or damaged by water-repellent application as work progresses. Correct damage to work of other trades caused by water-repellent application, as approved by Architect.

B. Comply with manufacturer's written cleaning instructions.

END OF SECTION

SECTION 072100

THERMAL INSULATION

PART 1 - GENERAL

1.1 RELATED DOCUMENTS

A. Drawings and general provisions of the Contract, including General and Supplementary Conditions and Division 01 Specification Sections, apply to this Section.

1.2 SUMMARY

A. Section Includes:

1. Extruded polystyrene foam-plastic board.

1.3 ACTION SUBMITTALS

A. Product Data: For each type of product.

1.4 INFORMATIONAL SUBMITTALS

A. Product Test Reports: For each product, for tests performed by a qualified testing agency.

B. Evaluation Reports: For foam-plastic insulation, from ICC-ES.

1.5 DELIVERY, STORAGE, AND HANDLING

A. Protect insulation materials from physical damage and from deterioration due to moisture, soiling, and other sources. Store inside and in a dry location. Comply with manufacturer's written instructions for handling, storing, and protecting during installation.

B. Protect foam-plastic board insulation as follows:

1. Do not expose to sunlight except to necessary extent for period of installation and concealment.
2. Protect against ignition at all times. Do not deliver foam-plastic board materials to Project site until just before installation time.
3. Quickly complete installation and concealment of foam-plastic board insulation in each area of construction.

PART 2 - PRODUCTS

2.1 EXTRUDED POLYSTYRENE FOAM-PLASTIC BOARD

A. Extruded polystyrene boards in this article are also called "XPS boards." Roman numeral designators in ASTM C 578 are assigned in a fixed random sequence, and their numeric order does not reflect increasing strength or other characteristics.

B. Extruded Polystyrene Board, Type IV: ASTM C 578, Type IV, 25-psi minimum compressive strength; unfaced; maximum flame-spread and smoke-developed indexes of 25 and 450, respectively, per ASTM E 84.

1. Manufacturers: Subject to compliance with requirements, provide products by one of the following:

   a. DiversiFoam Products.
   b. Dow Chemical Company (The).

2. Fire Propagation Characteristics: Passes NFPA 285 testing as part of an approved assembly.
3. Thermal Resistance: Minimum R value of 5.0 per inch.

2.2 ACCESSORIES

A. Insulation for Miscellaneous Voids:

1. Glass-Fiber Insulation: ASTM C 764, Type II, loose fill; with maximum flame-spread and smoke-developed indexes of 5, per ASTM E 84.
2. Spray Polyurethane Foam Insulation: ASTM C 1029, Type II, closed cell, with maximum flame-spread and smoke-developed indexes of 75 and 450, respectively, per ASTM E 84.

B. Adhesive for Bonding Insulation: Product compatible with insulation and air and water barrier materials, and with demonstrated capability to bond insulation securely to substrates without damaging insulation and substrates.

PART 3 - EXECUTION

3.1 PREPARATION

A. Clean substrates of substances that are harmful to insulation, including removing projections capable of puncturing insulation or vapor retarders, or that interfere with insulation attachment.

3.2 INSTALLATION, GENERAL

A. Comply with insulation manufacturer's written instructions applicable to products and applications.

B. Install insulation that is undamaged, dry, and unsoiled and that has not been left exposed to ice, rain, or snow at any time.

C. Extend insulation to envelop entire area to be insulated. Fit tightly around obstructions and fill voids with insulation. Remove projections that interfere with placement.

D. Provide sizes to fit applications and selected from manufacturer's standard thicknesses, widths, and lengths. Apply single layer of insulation units unless multiple layers are otherwise shown or required to make up total thickness or to achieve R-value.

3.3 INSTALLATION OF SLAB INSULATION

A. On vertical slab edge and foundation surfaces, set insulation units using manufacturer's recommended adhesive according to manufacturer's written instructions.

1. If not otherwise indicated, extend insulation a minimum of 24 inches below exterior grade line unless indicated otherwise.

B. On horizontal surfaces, loosely lay insulation units according to manufacturer's written instructions. Stagger end joints and tightly abut insulation units.

1. If not otherwise indicated, extend insulation a minimum of 24 inches in from exterior walls unless indicated otherwise.

3.4 INSTALLATION OF FOUNDATION WALL INSULATION

A. Butt panels together for tight fit.

B. Adhesive Installation: Install with adhesive or press into tacky waterproofing or dampproofing according to manufacturer's written instructions.

3.5 INSTALLATION OF INSULATION IN FRAMED CONSTRUCTION

A. Exterior Walls: Spray applied foam insulation refer to Section 072119 "Foamed-In-Place Insulation."

B. Miscellaneous Voids: Install insulation in miscellaneous voids and cavity spaces where required to prevent gaps in insulation using the following materials:

1. Glass-Fiber Insulation: Compact to approximately 40 percent of normal maximum volume equaling a density of approximately 2.5 lb/cu. ft..
2. Spray Polyurethane Insulation: Apply according to manufacturer's written instructions.

3.6 PROTECTION

A. Protect installed insulation from damage due to harmful weather exposures, physical abuse, and other causes. Provide temporary coverings or enclosures where insulation is subject to abuse and cannot be concealed and protected by permanent construction immediately after installation.

END OF SECTION

SECTION 072119

FOAMED-IN-PLACE INSULATION

PART 1 - GENERAL

1.1 RELATED DOCUMENTS

A. Drawings and general provisions of the Contract, including General and Supplementary Conditions and Division 01 Specification Sections, apply to this Section.

1.2 SUMMARY

A. Section Includes:

1. Closed-cell spray polyurethane foam.

1.3 ACTION SUBMITTALS

A. Product Data: For each type of product.

1.4 INFORMATIONAL SUBMITTALS

A. Qualification Data: For Installer.

B. Product Test Reports: For each product, for tests performed by a qualified testing agency.

C. Evaluation Reports: For spray-applied polyurethane foam-plastic insulation, from ICC-ES.

1.5 QUALITY ASSURANCE

A. Installer Qualifications: An authorized representative who is trained and approved by manufacturer.

PART 2 - PRODUCTS

2.1 CLOSED-CELL SPRAY POLYURETHANE FOAM

A. Closed-Cell Spray Polyurethane Foam: ASTM C 1029, Type II, minimum density of 2.0 lb/cu. ft. and minimum aged R-value at 1-inch thickness of 7.0 deg F x h x sq. ft./Btu at 75 deg F.

1. Manufacturers: Subject to compliance with requirements, available manufacturers offering products that may be incorporated into the Work include, but are not limited to the following:

a. Accella Polyurethane Systems; BaySeal CCX.
b. BASF Corp. - Construction Chemicals.

c. CertainTeed Corporation.
d. Foam-Tech/Building Envelope Solutions, Inc.
e. Henry Company.
f. Icynene Inc.
g. NCFI Polyurethanes; a division of Barnhardt Manufacturing Company.

2. Surface-Burning Characteristics: Comply with ASTM E 84; testing by a qualified testing agency. Identify products with appropriate markings of applicable testing agency.

a. Flame-Spread Index: 25 or less.
b. Smoke-Developed Index: 350 or less.

3. Fire Propagation Characteristics: Passes NFPA 285 testing as part of an approved assembly.

4. Formaldehyde free and CFC free.

2.2 MISCELLANEOUS MATERIALS

A. Primer: Material recommended by insulation manufacturer where required for adhesion of insulation to substrates.

PART 3 - EXECUTION

3.1 PREPARATION

A. Verify that substrates are clean, dry, and free of substances that are harmful to insulation.

B. Priming: Prime substrates where recommended by insulation manufacturer. Apply primer to comply with insulation manufacturer's written instructions. Confine primers to areas to be insulated; do not allow spillage or migration onto adjoining surfaces.

3.2 INSTALLATION

A. Comply with insulation manufacturer's written instructions applicable to products and applications.

B. Spray insulation to envelop entire area to be insulated and fill voids.

C. Apply in multiple passes to not exceed maximum thicknesses recommended by manufacturer. Do not spray into rising foam.

D. Framed Construction: Install into cavities formed by framing members to achieve thickness indicated on Drawings.

E. Cavity Walls: Install into cavities to thickness indicated on Drawings.

F. Miscellaneous Voids: Apply according to manufacturer's written instructions.

G. Provide reinforcing mesh to transition between substrate materials and around windows.

H. Apply insulation to uniform thickness of 3 inches, unless shown otherwise on Drawings.

3.3 PROTECTION

A. Protect installed insulation from damage due to harmful weather exposures, physical abuse, and other causes.

END OF SECTION

SECTION 073113

ASPHALT SHINGLES

PART 1 - GENERAL

1.1 RELATED DOCUMENTS

A. Drawings and general provisions of the Contract, including General and Supplementary Conditions and Division 01 Specification Sections, apply to this Section.

1.2 SUMMARY

A. Section Includes:

1. Asphalt shingles.
2. Underlayment.
3. Ridge vents.
4. Metal flashing and trim.
5. Snow guards.

1.3 DEFINITION

A. Roofing Terminology: See ASTM D 1079 and glossary of NRCA's "The NRCA Roofing and Waterproofing Manual" for definitions of terms related to roofing work in this Section.

1.4 PREINSTALLATION MEETINGS

A. Preinstallation Conference: Conduct conference at Project site.

1.5 ACTION SUBMITTALS

A. Product Data: For each type of product indicated.

B. Samples for Initial Selection: For each type of asphalt shingle indicated.

1. Include similar Samples of accessories involving color selection.

C. Samples for Verification: For the following products, of sizes indicated:

1. Asphalt Shingles: Full size.
2. Underlayment: 12 by 12 inches.
3. Ice dam protection: 12 by 12 inches.

1.6 INFORMATIONAL SUBMITTALS

A. Qualification Data: For Installer.

B. Product Test Reports: For each type of asphalt shingle and underlayment product indicated, for tests performed by manufacturer and witnessed by a qualified testing agency.

C. Evaluation Reports: For synthetic underlayment, from ICC-ES or other testing and inspecting agency acceptable to authorities having jurisdiction, indicating that product is suitable for intended use under applicable building codes.

D. Sample Warranty: For manufacturer's warranty.

1.7 CLOSEOUT SUBMITTALS

A. Maintenance Data: For asphalt shingles to include in maintenance manuals.

1.8 MAINTENANCE MATERIAL SUBMITTALS

A. Furnish extra materials that match products installed and that are packaged with protective covering for storage and identified with labels describing contents.

1. Asphalt Shingles: 100 sq. ft. of each type, in unbroken bundles.

1.9 QUALITY ASSURANCE

A. Installer Qualifications: An authorized representative who is trained and approved by manufacturer.

1.10 DELIVERY, STORAGE, AND HANDLING

A. Store roofing materials in a dry, well-ventilated location protected from weather, sunlight, and moisture according to manufacturer's written instructions.

B. Store underlayment rolls on end on pallets or other raised surfaces. Do not double stack rolls.

C. Protect unused roofing materials from weather, sunlight, and moisture when left overnight or when roofing work is not in progress.

D. Handle, store, and place roofing materials in a manner to prevent damage to roof deck or structural supporting members.

1.11 FIELD CONDITIONS

A. Environmental Limitations: Install self-adhering sheet underlayment within the range of ambient and substrate temperatures recommended in writing by manufacturer.

1.12 WARRANTY

A. Manufacturer's Warranty: Manufacturer agrees to repair or replace asphalt shingles that fail within specified warranty period.

1. Failures include, but are not limited to, the following:

a. Manufacturing defects.

2. Material Warranty Period: 40 years from date of Substantial Completion, prorated, with first 15 years nonprorated.
3. Algae-Discoloration Warranty Period: Asphalt shingles will not discolor 15 years from date of Substantial Completion.
4. Workmanship Warranty Period: Two years from date of Substantial Completion.

PART 2 - PRODUCTS

2.1 PERFORMANCE REQUIREMENTS

A. Exterior Fire-Test Exposure: Provide asphalt shingles and related roofing materials identical to those of assemblies tested for Class A fire resistance according to ASTM E 108 or UL 790 by Underwriters Laboratories or another testing and inspecting agency acceptable to authorities having jurisdiction. Identify products with appropriate markings of applicable testing agency.

2.2 GLASS-FIBER-REINFORCED ASPHALT SHINGLES

A. Laminated-Strip Asphalt (40 Year) Shingles: ASTM D 3462, laminated, multi-ply overlay construction, glass-fiber reinforced, mineral-granule surfaced, and self-sealing.

1. Basis of Design Product: Subject to compliance with requirements, provide products by CertainTeed Corp., or comparable product by one of the following:

a. GAF.
b. Owens Corning.

2. Strip Size: Manufacturer's standard.
3. Algae Resistance: Granules treated to resist algae discoloration.
4. Color and Blends: Grand Manor, Colonial Slate.

B. Hip and Ridge Shingles: Manufacturer's standard units to match asphalt shingles.

2.3 UNDERLAYMENT MATERIALS

A. Felt: ASTM D 4869, Type II, asphalt-saturated organic felts, nonperforated.

B. Self-Adhering Sheet Underlayment, Polyethylene Faced: ASTM D 1970, minimum of 40-mil-thick, slip-resisting, polyethylene-film-reinforced top surface laminated to SBS-modified asphalt adhesive, with release paper backing; cold applied.

1. Manufacturers: Subject to compliance with requirements, provide products by one of the following:

a. CertainTeed Corporaiton; WinterGuard.
b. GAF Shinglemate.
c. Grace, W. R. & Co. - Conn.; Ice & Water Shield.
d. Henry Company; Blueskin RF200.
e. Polyguard Products, Inc.; Deck Guard.

2.4 RIDGE VENTS

A. Rigid Ridge Vent: Manufacturer's standard, rigid section high-density polypropylene or other UV-stabilized plastic ridge vent with nonwoven geotextile filter strips; for use under ridge shingles.

1. Basis of Design Product: Subject to compliance with requirements, provide Metal Era; High Perf Ridge Vent, or comparable product by one of the following:

a. Air Vent, Inc.; a Gibraltar Industries company.
b. Cor-A-Vent, Inc.
c. GAF Materials Corp.
d. Mid-America Building Products.
e. Obdyke, Benjamin Incorporated.
f. Owens Corning.

2.5 SNOW GUARDS

A. Basis of Design Product: Subject to compliance with requirements, provide the following:

1. Berger Building Products; SGS100 Pro 100 Series Heavy Duty Stainless Steel Snow Guards.
2. Approved equal.

2.6 ACCESSORIES

A. Asphalt Roofing Cement: ASTM D 4586, Type II, asbestos free.

B. Roofing Nails: ASTM F 1667; aluminum, stainless-steel, copper, or hot-dip galvanized-steel wire shingle nails, minimum 0.120-inch-diameter, barbed or smooth shank, sharp-pointed, with a minimum 3/8-inch-diameter flat head and of sufficient length to penetrate 3/4 inch into solid wood decking or extend at least 1/8 inch through OSB or plywood sheathing.

1. Where nails are in contact with metal flashing, use nails made from same metal as flashing.

C. Felt Underlayment Nails: Aluminum, stainless-steel, or hot-dip galvanized-steel wire with low-profile capped heads or disc caps, 1-inch minimum diameter.

2.7 METAL FLASHING AND TRIM

A. General: Comply with requirements in Section 076200 "Sheet Metal Flashing and Trim."

B. Fabricate sheet metal flashing and trim to comply with recommendations in SMACNA's "Architectural Sheet Metal Manual" that apply to design, dimensions, metal, and other characteristics of the item.

1. Step Flashings: Fabricate with a headlap of 2 inches and a minimum extension of 4 inches over the underlying asphalt shingle and up the vertical surface.
2. Open-Valley Flashings: Fabricate in lengths not exceeding 10 feet with 1-inch-high, inverted-V profile at center of valley and equal flange widths of 12 inches.

3. Drip Edges: Fabricate in lengths not exceeding 10 feet with 2-inch roof-deck flange and 1-1/2-inch fascia flange with 3/8-inch drip at lower edge.

C. Vent Pipe Flashings: ASTM B 749, Type L51121, at least 1/16 inch thick. Provide lead sleeve sized to slip over and turn down into pipe, soldered to skirt at slope of roof, and extending at least 4 inches from pipe onto roof.

1. Kynar Finish Color: As selected by Architect.

PART 3 - EXECUTION

3.1 EXAMINATION

A. Examine substrates, areas, and conditions, with Installer present, for compliance with requirements for installation tolerances and other conditions affecting performance of the Work.

1. Examine roof sheathing to verify that sheathing joints are supported by framing and blocking or metal clips and that installation is within flatness tolerances.
2. Verify that substrate is sound, dry, smooth, clean, sloped for drainage, and completely anchored; and that provisions have been made for flashings and penetrations through asphalt shingles.

B. Prepare written report, endorsed by Installer, listing conditions detrimental to performance of the Work.

C. Proceed with installation only after unsatisfactory conditions have been corrected.

3.2 UNDERLAYMENT INSTALLATION

A. General: Comply with underlayment manufacturer's written installation instructions applicable to products and applications indicated unless more stringent requirements apply.

B. Single-Layer Felt Underlayment: Install on roof deck parallel with and starting at the eaves. Lap sides a minimum of 2 inches over underlying course. Lap ends a minimum of 4 inches. Stagger end laps between succeeding courses at least 72 inches.

1. Install felt underlayment on roof deck not covered by self-adhering sheet underlayment. Lap sides of felt over self-adhering sheet underlayment not less than 3 inches in direction to shed water. Lap ends of felt not less than 6 inches over self-adhering sheet underlayment.
2. Install fasteners at no more than 36-inch o.c.

C. Self-Adhering Sheet Underlayment: Install, wrinkle free, on roof deck. Comply with low-temperature installation restrictions of underlayment manufacturer if applicable. Install at locations indicated on Drawings, lapped in direction to shed water. Lap sides not less than 6 inches. Lap ends not less than 6 inches staggered 24 inches between courses. Roll laps with roller. Cover underlayment within seven days.

D. Concealed Valley Lining: For woven valleys. Comply with NRCA's "NRCA Guidelines for Asphalt Shingle Roof Systems." Install underlayment centered in valley and fastened to roof deck.

1. Lap roof-deck underlayment over valley underlayment at least 6 inches.
2. Install a full-width sheet of synthetic underlayment centered in valley. Lap ends of strips at least 12 inches in direction to shed water, and seal with asphalt roofing cement. Fasten to roof deck.

3.3 METAL FLASHING INSTALLATION

A. General: Install metal flashings and other sheet metal to comply with requirements in Section 076200 "Sheet Metal Flashing and Trim."

1. Install metal flashings according to recommendations in ARMA's "Residential Asphalt Roofing Manual" and NRCA's "NRCA Guidelines for Asphalt Shingle Roof Systems."

B. Apron Flashings: Extend lower flange over and beyond each side of downslope asphalt shingles and up the vertical surface.

C. Step Flashings: Install with a headlap of 2 inches and extend over the underlying asphalt shingle and up the vertical surface. Fasten to roof deck only.

D. Rake Drip Edges: Install rake drip-edge flashings over underlayment and fasten to roof deck.

E. Eave Drip Edges: Install eave drip-edge flashings below underlayment and fasten to roof sheathing.

F. Pipe Flashings: Form flashing around pipe penetrations and asphalt shingles. Fasten and seal to asphalt shingles as recommended by manufacturer.

3.4 ASPHALT SHINGLE INSTALLATION

A. General: Install asphalt shingles according to manufacturer's written instructions, recommendations in ARMA's "Residential Asphalt Roofing Manual," and asphalt shingle recommendations in NRCA's "The NRCA Roofing and Waterproofing Manual."

B. Install starter strip along lowest roof edge, consisting of an asphalt shingle strip with self-sealing strip face up at roof edge.

1. Extend asphalt shingles 1/2 inch over fasciae at eaves and rakes, unless indicated otherwise.
2. Install starter strip along rake edge.

C. Install first and remaining courses of asphalt shingles stair-stepping diagonally across roof deck with manufacturer's recommended offset pattern at succeeding courses, maintaining uniform exposure.

D. Fasten asphalt shingle strips with shingle manufacturer’s recommended minimum number of roofing nails located according to manufacturer's written instructions.

1. When ambient temperature during installation is below 50 deg F, seal asphalt shingles with asphalt roofing cement spots.

E. Woven Valleys: Extend succeeding asphalt-shingle courses from both sides of valley 12 inches beyond center of valley, weaving intersecting shingle-strip courses over each other. Use one-piece shingle strips without joints in valley.

1. Do not nail asphalt shingles within 6 inches of valley center.

F. Ridge Vents: Install continuous ridge vents over asphalt shingles according to manufacturer's written instructions. Fasten with roofing nails of sufficient length to penetrate sheathing.

G. Hip and Ridge Shingles: Maintain same exposure of cap shingles as roofing shingle exposure. Lap cap shingles at ridges to shed water away from direction of prevailing winds. Fasten with roofing nails of sufficient length to penetrate sheathing.

1. Fasten ridge cap asphalt shingles to cover ridge vent without obstructing airflow.

END OF SECTION

SECTION 074113.13

FORMED METAL ROOF PANELS

PART 1 - GENERAL

1.1 RELATED DOCUMENTS

A. Drawings and general provisions of the Contract, including General and Supplementary Conditions and Division 01 Specification Sections, apply to this Section.

1.2 SUMMARY

A. Section Includes:

1. Exposed-fastener, lap-seam, metal panels.

1.3 PREINSTALLATION MEETINGS

A. Preinstallation Conference: Conduct conference at Project site.

1. Meet with Owner, Architect, Owner's insurer if applicable, metal panel Installer, metal panel manufacturer's representative, structural-support Installer, and installers whose work interfaces with or affects metal panels, including installers of roof accessories and roof-mounted equipment.
2. Review and finalize construction schedule and verify availability of materials, Installer's personnel, equipment, and facilities needed to make progress and avoid delays.
3. Review methods and procedures related to metal panel installation, including manufacturer's written instructions.
4. Examine support conditions for compliance with requirements, including alignment between and attachment to structural members.
5. Review structural loading limitations of purlins and rafters during and after roofing.
6. Review flashings, special details, drainage, penetrations, equipment curbs, and condition of other construction that affect metal panels.
7. Review governing regulations and requirements for insurance, certificates, and tests and inspections if applicable.
8. Review temporary protection requirements for metal panel systems during and after installation.
9. Review procedures for repair of metal panels damaged after installation.
10. Document proceedings, including corrective measures and actions required, and furnish copy of record to each participant.

1.4 ACTION SUBMITTALS

A. Product Data: For each type of product.

1. Include construction details, material descriptions, dimensions of individual components and profiles, and finishes for each type of panel and accessory.

B. Shop Drawings:

1. Include fabrication and installation layouts of metal panels; details of edge conditions, joints, panel profiles, corners, anchorages, attachment system, trim, flashings, closures, and accessories; and special details.
2. Accessories: Include details of the flashing, trim, and anchorage systems, at a scale of not less than 1-1/2 inches per 12 inches.

C. Samples for Verification: For each type of exposed finish required, prepared on Samples of size indicated below:

1. Metal Panels: 12 inches long by actual panel width. Include fasteners, closures, and other metal panel accessories.

1.5 INFORMATIONAL SUBMITTALS

A. Qualification Data: For Installer.

B. Product Test Reports: For each product, for tests performed by a qualified testing agency.

C. Field quality-control reports.

D. Sample Warranties: For special warranties.

1.6 CLOSEOUT SUBMITTALS

A. Maintenance Data: For metal panels to include in maintenance manuals.

1.7 QUALITY ASSURANCE

A. Installer Qualifications: An entity that employs installers and supervisors who are trained and approved by manufacturer.

B. Mockups: Build mockups to verify selections made under Sample submittals and to demonstrate aesthetic effects and set quality standards for fabrication and installation.

1. Build mockups for typical roof area only, including accessories.

a. Size: 12 feet long.

2. Approval of mockups does not constitute approval of deviations from the Contract Documents contained in mockups unless Architect specifically approves such deviations in writing.

1.8 DELIVERY, STORAGE, AND HANDLING

A. Deliver components, metal panels, and other manufactured items so as not to be damaged or deformed. Package metal panels for protection during transportation and handling.

B. Unload, store, and erect metal panels in a manner to prevent bending, warping, twisting, and surface damage.

C. Stack metal panels horizontally on platforms or pallets, covered with suitable weathertight and ventilated covering. Store metal panels to ensure dryness, with positive slope for drainage of water. Do not store metal panels in contact with other materials that might cause staining, denting, or other surface damage.

D. Retain strippable protective covering on metal panels during installation.

E. Copper Panels: Wear gloves when handling to prevent fingerprints and soiling of surface.

1.9 FIELD CONDITIONS

A. Weather Limitations: Proceed with installation only when existing and forecasted weather conditions permit assembly of metal panels to be performed according to manufacturers' written instructions and warranty requirements.

1.10 COORDINATION

A. Coordinate sizes and locations of roof curbs, equipment supports, and roof penetrations with actual equipment provided.

B. Coordinate metal panel installation with rain drainage work, flashing, trim, construction of soffits, and other adjoining work to provide a leakproof, secure, and noncorrosive installation.

1.11 WARRANTY

A. Special Warranty: Manufacturer's standard form in which manufacturer agrees to repair or replace components of metal panel systems that fail in materials or workmanship within specified warranty period.

1. Failures include, but are not limited to, the following:

a. Structural failures including rupturing, cracking, or puncturing.
b. Deterioration of metals and other materials beyond normal weathering.

2. Warranty Period: Two years from date of Substantial Completion.

B. Special Warranty on Panel Finishes: Manufacturer's standard form in which manufacturer agrees to repair finish or replace metal panels that show evidence of deterioration of factory-applied finishes within specified warranty period.

1. Exposed Panel Finish: Deterioration includes, but is not limited to, the following:

a. Color fading more than 5 Hunter units when tested according to ASTM D 2244.
b. Chalking in excess of a No. 8 rating when tested according to ASTM D 4214.
c. Cracking, checking, peeling, or failure of paint to adhere to bare metal.

2. Finish Warranty Period: 20 years from date of Substantial Completion.

PART 2 - PRODUCTS

2.1 PERFORMANCE REQUIREMENTS

A. Structural Performance: Provide metal panel systems capable of withstanding the effects of the following loads, based on testing according to ASTM E 1592:

1. Wind Loads: As indicated on Drawings.
2. Other Design Loads: As indicated on Drawings.
3. Deflection Limits: For wind loads, no greater than 1/180 of the span.

B. Air Infiltration: Air leakage of not more than 0.06 cfm/sq. ft. when tested according to ASTM E 1680 or ASTM E 283 at the following test-pressure difference:

1. Test-Pressure Difference: 1.57 lbf/sq. ft.

C. Water Penetration under Static Pressure: No water penetration when tested according to ASTM E 1646 or ASTM E 331 at the following test-pressure difference:

1. Test-Pressure Difference: 2.86 lbf/sq. ft.

D. Wind-Uplift Resistance: Provide metal roof panel assemblies that comply with UL 580 for wind-uplift-resistance class indicated.

1. Uplift Rating: As indicated on Drawings.

E. Thermal Movements: Allow for thermal movements from ambient and surface temperature changes by preventing buckling, opening of joints, overstressing of components, failure of joint sealants, failure of connections, and other detrimental effects. Base calculations on surface temperatures of materials due to both solar heat gain and nighttime-sky heat loss.

1. Temperature Change (Range): 120 deg F, ambient; 180 deg F, material surfaces.

2.2 EXPOSED-FASTENER, LAP-SEAM, METAL PANELS

A. General: Provide factory-formed metal roof panels designed to be installed by lapping side edges of adjacent panels and mechanically attaching panels to supports using exposed fasteners in side laps. Include accessories required for weathertight installation.

B. Tapered-Rib-Profile, Exposed-Fastener Metal Roof Panels: Formed with raised, trapezoidal major ribs and flat pan between major ribs.

1. Basis-of-Design Product: Subject to compliance with requirements, provide Berridge Manufacturing Company; M-Panel, or a comparable product by one of the following:

a. CENTRIA Architectural Systems.
b. Fabral.
c. MBCI; a division of NCI Group, Inc.
d. PAC-CLAD; Petersen Aluminum Corporation.

2. Aluminum Sheet: Coil-coated sheet, ASTM B 209, alloy as standard with manufacturer, with temper as required to suit forming operations and structural performance required.

a. Thickness: 0.032 inch.
b. Surface: Smooth, flat finish.
c. Exterior Finish: Two-coat fluoropolymer.
d. Color: As selected by Architect from manufacturer's full range.

3. Major-Rib Spacing: 6 inches o.c.
4. Panel Coverage: 36 inches.
5. Panel Height: 0.75 inch.

2.3 UNDERLAYMENT MATERIALS

A. Self-Adhering, High-Temperature Underlayment: Provide self-adhering, cold-applied, sheet underlayment, a minimum of 30 mils thick, specifically designed to withstand high metal temperatures beneath metal roofing. Provide primer when recommended by underlayment manufacturer.

1. Thermal Stability: Stable after testing at 220 deg F; ASTM D 1970.
2. Low-Temperature Flexibility: Passes after testing at minus 20 deg F; ASTM D 1970.
3. Manufacturers: Subject to compliance with requirements, available manufacturers offering products that may be incorporated into the Work include, but are not limited to the following:

a. Carlisle Residential; a division of Carlisle Construction Materials.
b. Drexel Metals.
c. GCP Applied Technologies Inc. (formerly Grace Construction Products).
d. Henry Company.
e. Owens Corning.

B. Felt Underlayment: ASTM D 226/D 226M, Type II (No. 30), asphalt-saturated organic felts.

C. Slip Sheet: Manufacturer's recommended slip sheet, of type required for application.

2.4 MISCELLANEOUS MATERIALS

A. Miscellaneous Metal Subframing and Furring: ASTM C 645; cold-formed, metallic-coated steel sheet, ASTM A 653/A 653M, G90 coating designation or ASTM A 792/A 792M, Class AZ50 aluminum-zinc-alloy coating designation unless otherwise indicated. Provide manufacturer's standard sections as required for support and alignment of metal panel system.

B. Panel Accessories: Provide components required for a complete, weathertight panel system including trim, copings, fasciae, mullions, sills, corner units, clips, flashings, sealants, gaskets, fillers, closure strips, and similar items. Match material and finish of metal panels unless otherwise indicated.

1. Closures: Provide closures at eaves and ridges, fabricated of same metal as metal panels.
2. Backing Plates: Provide metal backing plates at panel end splices, fabricated from material recommended by manufacturer.
3. Closure Strips: Closed-cell, expanded, cellular, rubber or crosslinked, polyolefin-foam or closed-cell laminated polyethylene; minimum 1-inch-thick, flexible closure strips; cut or premolded to match metal panel profile. Provide closure strips where indicated or necessary to ensure weathertight construction.

C. Flashing and Trim: Provide flashing and trim formed from same material as metal panels as required to seal against weather and to provide finished appearance. Locations include, but are not limited to, eaves, rakes, corners, bases, framed openings, ridges, fasciae, and fillers. Finish flashing and trim with same finish system as adjacent metal panels.

D. Panel Fasteners: Self-tapping screws designed to withstand design loads. Provide exposed fasteners with heads matching color of metal panels by means of plastic caps or factory-applied coating. Provide EPDM or PVC sealing washers for exposed fasteners.

E. Panel Sealants: Provide sealant types recommended by manufacturer that are compatible with panel materials, are nonstaining, and do not damage panel finish.

1. Sealant Tape: Pressure-sensitive, 100 percent solids, gray polyisobutylene compound sealant tape with release-paper backing. Provide permanently elastic, nonsag, nontoxic, nonstaining tape 1/2-inch-wide and 1/8 inch thick.
2. Joint Sealant: ASTM C 920; elastomeric polyurethane or silicone sealant; of type, grade, class, and use classifications required to seal joints in metal panels and remain weathertight; and as recommended in writing by metal panel manufacturer.
3. Butyl-Rubber-Based, Solvent-Release Sealant: ASTM C 1311.

2.5 FABRICATION

A. General: Fabricate and finish metal panels and accessories at the factory, by manufacturer's standard procedures and processes, as necessary to fulfill indicated performance requirements demonstrated by laboratory testing. Comply with indicated profiles and with dimensional and structural requirements.

B. Provide panel profile, including major ribs and intermediate stiffening ribs, if any, for full length of panel.

C. Sheet Metal Flashing and Trim: Fabricate flashing and trim to comply with manufacturer's recommendations and recommendations in SMACNA's "Architectural Sheet Metal Manual" that apply to design, dimensions, metal, and other characteristics of item indicated.

2.6 FINISHES

A. Protect mechanical and painted finishes on exposed surfaces from damage by applying a strippable, temporary protective covering before shipping.

B. Appearance of Finished Work: Variations in appearance of abutting or adjacent pieces are acceptable if they are within one-half of the range of approved Samples. Noticeable variations in same piece are unacceptable. Variations in appearance of other components are acceptable if they are within the range of approved Samples and are assembled or installed to minimize contrast.

C. Aluminum Panels and Accessories:

1. Two-Coat Fluoropolymer: AAMA 2605. Fluoropolymer finish containing not less than 70 percent PVDF resin by weight in color coat. Prepare, pretreat, and apply coating to exposed metal surfaces to comply with coating and resin manufacturers' written instructions.

PART 3 - EXECUTION

3.1 EXAMINATION

A. Examine substrates, areas, and conditions, with Installer present, for compliance with requirements for installation tolerances, metal panel supports, and other conditions affecting performance of the Work.

1. Examine primary and secondary roof framing to verify that rafters, purlins, angles, channels, and other structural panel support members and anchorages have been installed within alignment tolerances required by metal roof panel manufacturer.
2. Examine solid roof sheathing to verify that sheathing joints are supported by framing or blocking and that installation is within flatness tolerances required by metal roof panel manufacturer.

a. Verify that air- or water-resistive barriers have been installed over sheathing or backing substrate to prevent air infiltration or water penetration.

B. Examine roughing-in for components and systems penetrating metal panels to verify actual locations of penetrations relative to seam locations of metal panels before installation.

C. Proceed with installation only after unsatisfactory conditions have been corrected.

3.2 PREPARATION

A. Miscellaneous Supports: Install subframing, furring, and other miscellaneous panel support members and anchorages according to ASTM C 754 and metal panel manufacturer's written recommendations.

3.3 UNDERLAYMENT INSTALLATION

A. Self-Adhering Sheet Underlayment: Apply primer if required by manufacturer. Comply with temperature restrictions of underlayment manufacturer for installation. Apply at locations indicated on Drawings, wrinkle free, in shingle fashion to shed water, and with end laps of not less than 6 inches staggered 24 inches between courses. Overlap side edges not less than 3-1/2 inches. Roll laps with roller. Cover underlayment within 14 days.

1. Apply over the roof areas indicated.

B. Felt Underlayment: Apply at locations indicated on Drawings, in shingle fashion to shed water, and with lapped joints of not less than 2 inches.

C. Slip Sheet: Apply slip sheet over underlayment before installing metal roof panels.

D. Flashings: Install flashings to cover underlayment to comply with requirements specified in Section 076200 "Sheet Metal Flashing and Trim."

3.4 METAL PANEL INSTALLATION

A. General: Install metal panels according to manufacturer's written instructions in orientation, sizes, and locations indicated. Install panels perpendicular to supports unless otherwise

indicated. Anchor metal panels and other components of the Work securely in place, with provisions for thermal and structural movement.

1. Shim or otherwise plumb substrates receiving metal panels.
2. Flash and seal metal panels at perimeter of all openings. Fasten with self-tapping screws. Do not begin installation until air or water-resistive barriers and flashings that are concealed by metal panels are installed.
3. Install screw fasteners in predrilled holes.
4. Locate and space fastenings in uniform vertical and horizontal alignment.
5. Install flashing and trim as metal panel work proceeds.
6. Locate panel splices over, but not attached to, structural supports. Stagger panel splices and end laps to avoid a four-panel lap splice condition.
7. Align bottoms of metal panels and fasten with blind rivets, bolts, or self-tapping screws. Fasten flashings and trim around openings and similar elements with self-tapping screws.
8. Provide weathertight escutcheons for pipe- and conduit-penetrating panels.

B. Fasteners:

1. Steel Panels: Use stainless-steel fasteners for surfaces exposed to the exterior; use galvanized-steel fasteners for surfaces exposed to the interior.
2. Aluminum Panels: Use aluminum or stainless-steel fasteners for surfaces exposed to the exterior; use aluminum or galvanized-steel fasteners for surfaces exposed to the interior.
3. Copper Panels: Use copper, stainless-steel, or hardware-bronze fasteners.
4. Stainless-Steel Panels: Use stainless-steel fasteners.

C. Metal Protection: Where dissimilar metals contact each other or corrosive substrates, protect against galvanic action as recommended in writing by metal panel manufacturer.

D. Lap-Seam Metal Panels: Fasten metal panels to supports with fasteners at each lapped joint at location and spacing recommended by manufacturer.

1. Lap ribbed or fluted sheets one full rib. Apply panels and associated items true to line for neat and weathertight enclosure.
2. Provide metal-backed washers under heads of exposed fasteners bearing on weather side of metal panels.
3. Locate and space exposed fasteners in uniform vertical and horizontal alignment. Use proper tools to obtain controlled uniform compression for positive seal without rupture of washer.
4. Install screw fasteners with power tools having controlled torque adjusted to compress washer tightly without damage to washer, screw threads, or panels. Install screws in predrilled holes.
5. Flash and seal panels with weather closures at perimeter of all openings.
6. Watertight Installation:

    a. Apply a continuous ribbon of sealant or tape to seal lapped joints of metal panels, using sealant or tape as recommend by manufacturer on side laps of nesting-type panels and elsewhere as needed to make panels watertight.
    b. Provide sealant or tape between panels and protruding equipment, vents, and accessories.
    c. At panel splices, nest panels with minimum 6-inch end lap, sealed with sealant and fastened together by interlocking clamping plates.

E. Accessory Installation: Install accessories with positive anchorage to building and weathertight mounting, and provide for thermal expansion. Coordinate installation with flashings and other components.

1. Install components required for a complete metal panel system including trim, copings, corners, seam covers, flashings, sealants, gaskets, fillers, closure strips, and similar items. Provide types indicated by metal panel manufacturer; or, if not indicated, provide types recommended in writing by metal panel manufacturer.

F. Flashing and Trim: Comply with performance requirements, manufacturer's written installation instructions, and SMACNA's "Architectural Sheet Metal Manual." Provide concealed fasteners where possible, and set units true to line and level. Install work with laps, joints, and seams that are permanently watertight.

1. Install exposed flashing and trim that is without buckling and tool marks, and that is true to line and levels indicated, with exposed edges folded back to form hems. Install sheet metal flashing and trim to fit substrates and achieve waterproof performance.
2. Expansion Provisions: Provide for thermal expansion of exposed flashing and trim. Space movement joints at a maximum of 10 feet with no joints allowed within 24 inches of corner or intersection. Where lapped expansion provisions cannot be used or would not be sufficiently waterproof, form expansion joints of intermeshing hooked flanges, not less than 1 inch deep, filled with mastic sealant (concealed within joints).

3.5 ERECTION TOLERANCES

A. Installation Tolerances: Shim and align metal panel units within installed tolerance of 1/4 inch in 20 feet on slope and location lines and within 1/8-inch offset of adjoining faces and of alignment of matching profiles.

3.6 FIELD QUALITY CONTROL

A. Manufacturer's Field Service: Engage a factory-authorized service representative to test and inspect completed metal panel installation, including accessories. Report results in writing.

B. Remove and replace applications where tests and inspections indicate that they do not comply with specified requirements.

C. Additional tests and inspections, at Contractor's expense, are performed to determine compliance of replaced or additional work with specified requirements.

D. Prepare test and inspection reports.

3.7 CLEANING AND PROTECTION

A. Remove temporary protective coverings and strippable films, if any, as metal panels are installed, unless otherwise indicated in manufacturer's written installation instructions. On completion of metal panel installation, clean finished surfaces as recommended by metal panel manufacturer. Maintain in a clean condition during construction.

B. Replace metal panels that have been damaged or have deteriorated beyond successful repair by finish touchup or similar minor repair procedures.

END OF SECTION

SECTION 074293

SOFFIT PANELS

PART 1 - GENERAL

1.1 RELATED DOCUMENTS

A. Drawings and general provisions of the Contract, including General and Supplementary Conditions and Division 01 Specification Sections, apply to this Section.

1.2 SUMMARY

A. Section includes metal soffit panels.

1.3 PREINSTALLATION MEETINGS

A. Preinstallation Conference: Conduct conference at Project site.

1.4 ACTION SUBMITTALS

A. Product Data: For each type of product.

1. Include construction details, material descriptions, dimensions of individual components and profiles, and finishes for each type of panel and accessory.

B. Shop Drawings:

1. Include fabrication and installation layouts of metal panels; details of edge conditions, joints, panel profiles, corners, anchorages, attachment system, trim, flashings, closures, and accessories; and special details.
2. Accessories: Include details of flashing, trim, and anchorage systems, at a scale of not less than 1-1/2 inches per 12 inches.

C. Samples for Verification: For each type of exposed finish required, prepared on Samples of size indicated below:

1. Metal Panels: 12 inches long by actual panel width. Include fasteners, closures, and other metal panel accessories.

1.5 INFORMATIONAL SUBMITTALS

A. Qualification Data: For Installer.

B. Product Test Reports: For each product, tests performed by a qualified testing agency.

C. Sample Warranties: For special warranties.

1.6 CLOSEOUT SUBMITTALS

A. Maintenance Data: For metal panels to include in maintenance manuals.

1.7 QUALITY ASSURANCE

A. Installer Qualifications: An entity that employs installers and supervisors who are trained and approved by manufacturer.

B. Mockups: Build mockups to verify selections made under Sample submittals and to demonstrate aesthetic effects and set quality standards for fabrication and installation.

1. Build mockup of typical roof eave and soffit as shown on Drawings; approximately four panels wide by full eave width, including attachments and accessories.
2. Approval of mockups does not constitute approval of deviations from the Contract Documents contained in mockups unless Architect specifically approves such deviations in writing.

1.8 DELIVERY, STORAGE, AND HANDLING

A. Deliver components, metal panels, and other manufactured items so as not to be damaged or deformed. Package metal panels for protection during transportation and handling.

B. Unload, store, and erect metal panels in a manner to prevent bending, warping, twisting, and surface damage.

C. Stack metal panels horizontally on platforms or pallets, covered with suitable weathertight and ventilated covering. Store metal panels to ensure dryness, with positive slope for drainage of water. Do not store metal panels in contact with other materials that might cause staining, denting, or other surface damage.

D. Retain strippable protective covering on metal panels during installation.

1.9 FIELD CONDITIONS

A. Weather Limitations: Proceed with installation only when existing and forecasted weather conditions permit assembly of metal panels to be performed according to manufacturers' written instructions and warranty requirements.

1.10 COORDINATION

A. Coordinate metal panel installation with rain drainage work, flashing, trim, construction of walls, and other adjoining work to provide a leakproof, secure, and noncorrosive installation.

1.11 WARRANTY

A. Special Warranty: Manufacturer's standard form in which manufacturer agrees to repair or replace components of metal panel systems that fail in materials or workmanship within specified warranty period.

1. Failures include, but are not limited to, the following:

   a. Structural failures including rupturing, cracking, or puncturing.
   b. Deterioration of metals and other materials beyond normal weathering.

2. Warranty Period: Two years from date of Substantial Completion.

B. Special Warranty on Panel Finishes: Manufacturer's standard form in which manufacturer agrees to repair finish or replace metal panels that show evidence of deterioration of factory-applied finishes within specified warranty period.

1. Exposed Panel Finish: Deterioration includes, but is not limited to, the following:

   a. Color fading more than 5 Hunter units when tested according to ASTM D 2244.
   b. Chalking in excess of a No. 8 rating when tested according to ASTM D 4214.
   c. Cracking, checking, peeling, or failure of paint to adhere to bare metal.

2. Finish Warranty Period: 20 years from date of Substantial Completion.

PART 2 - PRODUCTS

2.1 PERFORMANCE REQUIREMENTS

A. Structural Performance: Provide metal panel systems capable of withstanding the effects of the following loads, based on testing according to ASTM E 1592:

1. Wind Loads: As indicated on Drawings.

B. Thermal Movements: Allow for thermal movements from ambient and surface temperature changes by preventing buckling, opening of joints, overstressing of components, failure of joint sealants, failure of connections, and other detrimental effects. Base calculations on surface temperatures of materials due to both solar heat gain and nighttime-sky heat loss.

1. Temperature Change (Range): 120 deg F, ambient; 180 deg F, material surfaces.

2.2 METAL SOFFIT PANELS

A. General: Provide metal soffit panels designed to be installed by lapping and interconnecting side edges of adjacent panels and mechanically attaching through panel to supports using concealed fasteners in side laps. Include accessories required for weathertight installation.

B. Flush-Profile Metal Soffit Panels: Perforated panels formed with vertical panel edges and intermediate stiffening ribs symmetrically spaced between panel edges; with flush joint between panels.

1. Basis-of-Design Product: Subject to compliance with requirements, provide Berridge Manufacturing Company; L-Panel, or a comparable product by one of the following:

   a. ATAS International, Inc.
   b. Drexel Metals.
   c. MBCI; a division of NCI Group, Inc.
   d. PAC-CLAD; Petersen Aluminum Corporation.

2. Aluminum Sheet: Coil-coated sheet, ASTM B 209, alloy as standard with manufacturer, with temper as required to suit forming operations and structural performance required.

    a. Thickness: 0.032 inch.
    b. Surface: Smooth, flat finish.
    c. Exterior Finish: Two-coat fluoropolymer.
    d. Color: As selected by Architect from manufacturer's full range.

3. Panel Coverage: 11-5/8 inches.
4. Panel Height: 1.0 inch.

2.3 MISCELLANEOUS MATERIALS

A. Miscellaneous Metal Subframing and Furring: ASTM C 645, cold-formed, metallic-coated steel sheet, ASTM A 653/A 653M, G90 coating designation or ASTM A 792/A 792M, Class AZ50 aluminum-zinc-alloy coating designation unless otherwise indicated. Provide manufacturer's standard sections as required for support and alignment of metal panel system.

B. Panel Accessories: Provide components required for a complete, weathertight panel system including trim, clips, flashings, sealants, gaskets, fillers, closure strips, and similar items. Match material and finish of metal panels unless otherwise indicated.

    1. Closure Strips: Closed-cell, expanded, cellular, rubber or crosslinked, polyolefin-foam or closed-cell laminated polyethylene; minimum 1-inch-thick, flexible closure strips; cut or premolded to match metal panel profile. Provide closure strips where indicated or necessary to ensure weathertight construction.

C. Flashing and Trim: Provide flashing and trim formed from same material as metal panels as required to seal against weather and to provide finished appearance. Finish flashing and trim with same finish system as adjacent metal panels.

D. Panel Fasteners: Self-tapping screws designed to withstand design loads. Provide exposed fasteners with heads matching color of metal panels by means of plastic caps or factory-applied coating. Provide EPDM or PVC sealing washers for exposed fasteners.

E. Panel Sealants: Provide sealant types recommended by manufacturer that are compatible with panel materials, are nonstaining, and do not damage panel finish.

    1. Sealant Tape: Pressure-sensitive, 100 percent solids, gray polyisobutylene compound sealant tape with release-paper backing. Provide permanently elastic, nonsag, nontoxic, nonstaining tape 1/2-inch-wide and 1/8 inch thick.
    2. Joint Sealant: ASTM C 920; elastomeric polyurethane or silicone sealant; of type, grade, class, and use classifications required to seal joints in metal panels and remain weathertight; and as recommended in writing by metal panel manufacturer.
    3. Butyl-Rubber-Based, Solvent-Release Sealant: ASTM C 1311.

2.4 FABRICATION

A. General: Fabricate and finish metal panels and accessories at the factory, by manufacturer's standard procedures and processes, as necessary to fulfill indicated performance requirements demonstrated by laboratory testing. Comply with indicated profiles and with dimensional and structural requirements.

B. Provide panel profile, including major ribs and intermediate stiffening ribs, if any, for full length of panel.

C. Sheet Metal Flashing and Trim: Fabricate flashing and trim to comply with manufacturer's recommendations and recommendations in SMACNA's "Architectural Sheet Metal Manual" that apply to design, dimensions, metal, and other characteristics of item indicated.

2.5 FINISHES

A. Protect mechanical and painted finishes on exposed surfaces from damage by applying a strippable, temporary protective covering before shipping.

B. Appearance of Finished Work: Variations in appearance of abutting or adjacent pieces are acceptable if they are within one-half of the range of approved Samples. Noticeable variations in same piece are not acceptable. Variations in appearance of other components are acceptable if they are within the range of approved Samples and are assembled or installed to minimize contrast.

C. Aluminum Panels and Accessories:

1. Two-Coat Fluoropolymer: AAMA 2605. Fluoropolymer finish containing not less than 70 percent PVDF resin by weight in color coat. Prepare, pretreat, and apply coating to exposed metal surfaces to comply with coating and resin manufacturers' written instructions.

PART 3 - EXECUTION

3.1 EXAMINATION

A. Examine substrates, areas, and conditions, with Installer present, for compliance with requirements for installation tolerances, metal panel supports, and other conditions affecting performance of the Work.

1. Examine framing to verify that girts, angles, channels, studs, and other structural panel support members and anchorage have been installed within alignment tolerances required by metal panel manufacturer.

B. Examine roughing-in for components and systems penetrating metal panels to verify actual locations of penetrations relative to seam locations of metal panels before installation.

C. Proceed with installation only after unsatisfactory conditions have been corrected.

3.2 PREPARATION

A. Miscellaneous Supports: Install subframing, furring, and other miscellaneous panel support members and anchorages according to ASTM C 754 and metal panel manufacturer's written recommendations.

1. Soffit Framing: Wire tie or clip furring channels to supports, as required to comply with requirements for assemblies indicated.

3.3 METAL PANEL INSTALLATION

A. General: Install metal panels according to manufacturer's written instructions in orientation, sizes, and locations indicated. Install panels perpendicular to supports unless otherwise indicated. Anchor metal panels and other components of the Work securely in place, with provisions for thermal and structural movement.

1. Shim or otherwise plumb substrates receiving metal panels.
2. Flash and seal metal panels at perimeter of all openings. Fasten with self-tapping screws. Do not begin installation until air- or water-resistive barriers and flashings that will be concealed by metal panels are installed.
3. Install screw fasteners in predrilled holes.
4. Locate and space fastenings in uniform vertical and horizontal alignment.
5. Install flashing and trim as metal panel work proceeds.
6. Locate panel splices over, but not attached to, structural supports. Stagger panel splices and end laps to avoid a four-panel lap splice condition.
7. Provide weathertight escutcheons for pipe- and conduit-penetrating panels.

B. Fasteners:

1. Aluminum Panels: Use aluminum or stainless-steel fasteners for surfaces exposed to the exterior; use aluminum or galvanized-steel fasteners for surfaces exposed to the interior.

C. Metal Protection: Where dissimilar metals contact each other or corrosive substrates, protect against galvanic action as recommended in writing by metal panel manufacturer.

D. Lap-Seam Metal Panels: Fasten metal panels to supports with fasteners at each lapped joint at location and spacing recommended by manufacturer.

1. Apply panels and associated items true to line for neat and weathertight enclosure.
2. Provide metal-backed washers under heads of exposed fasteners bearing on weather side of metal panels.
3. Locate and space exposed fasteners in uniform vertical and horizontal alignment. Use proper tools to obtain controlled uniform compression for positive seal without rupture of washer.
4. Install screw fasteners with power tools having controlled torque adjusted to compress washer tightly without damage to washer, screw threads, or panels. Install screws in predrilled holes.

E. Accessory Installation: Install accessories with positive anchorage to building and weathertight mounting, and provide for thermal expansion. Coordinate installation with flashings and other components.

1. Install components required for a complete metal panel system including trim, corners, seam covers, flashings, sealants, gaskets, fillers, closure strips, and similar items. Provide types indicated by metal panel manufacturer; or, if not indicated, provide types recommended by metal panel manufacturer.

F. Flashing and Trim: Comply with performance requirements, manufacturer's written installation instructions, and SMACNA's "Architectural Sheet Metal Manual." Provide concealed fasteners where possible, and set units true to line and level as indicated. Install work with laps, joints, and seams that are permanently watertight.

1. Install exposed flashing and trim that is without buckling, and tool marks, and that is true to line and levels indicated, with exposed edges folded back to form hems. Install sheet metal flashing and trim to fit substrates and to achieve waterproof performance.
2. Expansion Provisions: Provide for thermal expansion of exposed flashing and trim. Space movement joints at a maximum of 10 feet with no joints allowed within 24 inches of corner or intersection. Where lapped expansion provisions cannot be used or would not be waterproof, form expansion joints of intermeshing hooked flanges, not less than 1-inch deep, filled with mastic sealant (concealed within joints).

3.4 CLEANING AND PROTECTION

A. Remove temporary protective coverings and strippable films, if any, as metal panels are installed unless otherwise indicated in manufacturer's written installation instructions. On completion of metal panel installation, clean finished surfaces as recommended by metal panel manufacturer. Maintain in a clean condition during construction.

B. After metal panel installation, clear weep holes and drainage channels of obstructions, dirt, and sealant.

C. Replace metal panels that have been damaged or have deteriorated beyond successful repair by finish touchup or similar minor repair procedures.

END OF SECTION

SECTION 074646

FIBER-CEMENT SIDING

PART 1 - GENERAL

1.1 RELATED DOCUMENTS

A. Drawings and general provisions of the Contract, including General and Supplementary Conditions and Division 01 Specification Sections, apply to this Section.

1.2 SUMMARY

A. Section includes fiber-cement siding and trim.

1.3 COORDINATION

A. Coordinate siding installation with flashings and other adjoining construction to ensure proper sequencing.

1.4 PREINSTALLATION MEETINGS

A. Preinstallation Conference: Conduct conference at Project site.

1.5 ACTION SUBMITTALS

A. Product Data: For each type of product. Include construction details, material descriptions, dimensions of individual components and profiles, and finishes.

B. Samples for Initial Selection: For fiber-cement siding and soffit including related accessories.

C. Samples for Verification: For each type, color, texture, and pattern required.

1. 12-inch-long-by-actual-width Sample of siding.
2. 12-inch-long-by-actual-width Samples of trim and accessories.

1.6 INFORMATIONAL SUBMITTALS

A. Product Certificates: For each type of fiber-cement siding and trim.

B. Product Test Reports: Based on evaluation of comprehensive tests performed by a qualified testing agency, for fiber-cement siding.

C. Research/Evaluation Reports: For each type of fiber-cement siding required, from ICC-ES.

D. Sample Warranty: For special warranty.

1.7 CLOSEOUT SUBMITTALS

A. Maintenance Data: For each type of product, including related accessories, to include in maintenance manuals.

1.8 MAINTENANCE MATERIAL SUBMITTALS

A. Furnish extra materials that match products installed and that are packaged with protective covering for storage and identified with labels describing contents.

1. Furnish full lengths of fiber-cement siding and soffit including related accessories, in a quantity equal to 2 percent of amount installed.

1.9 QUALITY ASSURANCE

A. Mockups: Build mockups to verify selections made under Sample submittals and to demonstrate aesthetic effects and to set quality standards for fabrication and installation.

1. Build mockup of typical wall area as shown on Drawings.
2. Approval of mockups does not constitute approval of deviations from the Contract Documents contained in mockups unless Architect specifically approves such deviations in writing.
3. Subject to compliance with requirements, approved mockups may become part of the completed Work if undisturbed at time of Substantial Completion.

1.10 DELIVERY, STORAGE, AND HANDLING

A. Deliver and store packaged materials in original containers with labels intact until time of use.

B. Store materials on elevated platforms, under cover, and in a dry location.

1.11 WARRANTY

A. Special Warranty: Manufacturer agrees to repair or replace products that fail in materials or workmanship within specified warranty period.

1. Failures include, but are not limited to, the following:

a. Structural failures including cracking and deforming.
b. Deterioration of materials beyond normal weathering.

2. Warranty Period: 50 years from date of Substantial Completion.

PART 2 - PRODUCTS

2.1 MANUFACTURERS

A. Source Limitations: Obtain products, including related accessories, from single source from single manufacturer.

2.2 FIBER-CEMENT SIDING

A. General: ASTM C 1186, Type A, Grade II, fiber-cement board, noncombustible when tested according to ASTM E 136; with a flame-spread index of 25 or less when tested according to ASTM E 84.

1. Basis of Design Product: Subject to compliance with requirements, provide products by James Hardie Building Products, Inc., or comparable product by one of the following:

a. Allura USA.
b. GAF.

B. Labeling: Provide fiber-cement siding that is tested and labeled according to ASTM C 1186 by a qualified testing agency acceptable to authorities having jurisdiction.

C. Nominal Thickness: Not less than 5/16 inch.

D. Horizontal Pattern: Boards 8-1/4 to 8-1/2 inches wide in beaded-edge style.

1. Texture: Smooth.

E. Factory Finishing: Manufacturer's standard finish.

1. Color: Cobblestone.

2.3 FIBER-CEMENT TRIM

A. General: ASTM C 1186, Type A, Grade II, fiber-cement board, noncombustible when tested according to ASTM E 136; with a flame-spread index of 25 or less when tested according to ASTM E 84.

B. Size: Not less than 5/4-inch-thick by 7-1/4 inches wide.

C. Factory Finishing: Manufacturer's standard finish.

1. Color: Cobblestone.

2.4 ACCESSORIES

A. Siding Accessories, General: Provide starter strips, edge trim, outside and inside corner caps, and other items as recommended by siding manufacturer for building configuration.

1. Provide accessories matching color and texture of adjacent siding unless otherwise indicated.

B. Flashing: Provide flashing complying with Section 076200 "Sheet Metal Flashing and Trim" at window and door heads and where indicated.

C. Fasteners:

1. For fastening to metal, use ribbed bugle-head screws of sufficient length to penetrate a minimum of 1/4 inch, or three screw-threads, into substrate.
2. For fastening fiber cement, use hot-dip galvanized fasteners.

PART 3 - EXECUTION

3.1 EXAMINATION

A. Examine substrates for compliance with requirements for installation tolerances and other conditions affecting performance of fiber-cement siding and soffit and related accessories.

B. Proceed with installation only after unsatisfactory conditions have been corrected.

3.2 PREPARATION

A. Clean substrates of projections and substances detrimental to application.

3.3 INSTALLATION

A. General: Comply with manufacturer's written installation instructions applicable to products and applications indicated unless more stringent requirements apply.

1. Do not install damaged components.
2. Install fasteners no more than 24 inches o.c.

B. Install joint sealants as specified in Section 079200 "Joint Sealants" and to produce a weathertight installation.

3.4 ADJUSTING AND CLEANING

A. Remove damaged, improperly installed, or otherwise defective materials and replace with new materials complying with specified requirements.

B. Clean finished surfaces according to manufacturer's written instructions and maintain in a clean condition during construction.

END OF SECTION

SECTION 075323

ETHYLENE-PROPYLENE-DIENE-MONOMER (EPDM) ROOFING

PART 1 - GENERAL

1.1 RELATED DOCUMENTS

A. Drawings and general provisions of the Contract, including General and Supplementary Conditions and Division 01 Specification Sections, apply to this Section.

1.2 SUMMARY

A. Section Includes:

1. Adhered ethylene-propylene-diene-terpolymer (EPDM) roofing system.
2. Roof insulation.
3. Cover board.
4. Walkways.

1.3 DEFINITIONS

A. Roofing Terminology: Definitions in ASTM D 1079 and glossary of NRCA's "The NRCA Roofing Manual: Membrane Roof Systems" apply to work of this Section.

1.4 PREINSTALLATION MEETINGS

A. Preliminary Roofing Conference: Before starting roof deck construction, conduct conference at Project site.

1. Meet with Owner, Architect, Construction Manager, Owner's insurer if applicable, testing and inspecting agency representative, roofing Installer, roofing system manufacturer's representative, deck Installer, air barrier Installer, and installers whose work interfaces with or affects roofing, including installers of roof accessories and roof-mounted equipment.
2. Review methods and procedures related to roofing installation, including manufacturer's written instructions.
3. Review and finalize construction schedule, and verify availability of materials, Installer's personnel, equipment, and facilities needed to make progress and avoid delays.
4. Review deck substrate requirements for conditions and finishes, including flatness and fastening.
5. Review structural loading limitations of roof deck during and after roofing.
6. Review base flashings, special roofing details, roof drainage, roof penetrations, equipment curbs, and condition of other construction that affects roofing system.
7. Review governing regulations and requirements for insurance and certificates if applicable.
8. Review temporary protection requirements for roofing system during and after installation.
9. Review roof observation and repair procedures after roofing installation.

1.5 ACTION SUBMITTALS

A. Product Data: For each type of product.

1. For insulation and roof system component fasteners, include copy of FM Approvals' RoofNav listing.

B. Shop Drawings: Include roof plans, sections, details, and attachments to other work, including the following:

1. Layout and thickness if insulation.
2. Base flashings and membrane terminations.
3. Flashing details at penetrations.
4. Tapered insulation, thickness, and slopes.
5. Roof plan showing orientation of steel roof deck and orientation of roof membrane and fastening spacings and patterns for mechanically fastened roofing system.
6. Insulation fastening patterns for corner, perimeter, and field-of-roof locations.
7. Tie-in with air barrier.

C. Samples for Verification: For the following products:

1. Roof membrane and flashings of color required.
2. Walkway pads or rolls, of color required.

D. Wind Uplift Resistance Submittal: For roofing system, indicating compliance with wind uplift performance requirements.

1.6 INFORMATIONAL SUBMITTALS

A. Qualification Data: For Installer and manufacturer.

B. Manufacturer Certificates:

C. Product Test Reports: For components of roof membrane and insulation, for tests performed by a qualified testing agency, indicating compliance with specified requirements.

D. Evaluation Reports: For components of roofing system, from ICC-ES.

1. Field Test Reports:
2. Concrete internal relative humidity test reports.
3. Fastener-pullout test results and manufacturer's revised requirements for fastener patterns.

E. Sample Warranties: For manufacturer's special warranties.

1.7 CLOSEOUT SUBMITTALS

A. Maintenance Data: For roofing system to include in maintenance manuals.

1.8 QUALITY ASSURANCE

A. Manufacturer Qualifications: A qualified manufacturer that is UL listed for roofing system identical to that used for this Project.

B. Installer Qualifications: A qualified firm that is approved, authorized, or licensed by roofing system manufacturer to install manufacturer's product and that is eligible to receive manufacturer's special warranty.

1.9 DELIVERY, STORAGE, AND HANDLING

A. Deliver roofing materials to Project site in original containers with seals unbroken and labeled with manufacturer's name, product brand name and type, date of manufacture, approval or listing agency markings, and directions for storing and mixing with other components.

B. Store liquid materials in their original undamaged containers in a clean, dry, protected location and within the temperature range required by roofing system manufacturer. Protect stored liquid material from direct sunlight.

1. Discard and legally dispose of liquid material that cannot be applied within its stated shelf life.

C. Protect roof insulation materials from physical damage and from deterioration by sunlight, moisture, soiling, and other sources. Store in a dry location. Comply with insulation manufacturer's written instructions for handling, storing, and protecting during installation.

D. Handle and store roofing materials, and place equipment in a manner to avoid permanent deflection of deck.

1.10 FIELD CONDITIONS

A. Weather Limitations: Proceed with installation only when existing and forecasted weather conditions permit roofing system to be installed according to manufacturer's written instructions and warranty requirements.

1.11 WARRANTY

A. Special Warranty: Manufacturer agrees to repair or replace components of roofing system that fail in materials or workmanship within specified warranty period.

1. Special warranty includes roof membrane, base flashings, roof insulation, fasteners, cover boards, and other components of roofing system.
2. Warranty Period: 20 years from Date of Substantial Completion.

PART 2 - PRODUCTS

2.1 PERFORMANCE REQUIREMENTS

A. General Performance: Installed roofing system and base flashings shall withstand specified uplift pressures, thermally induced movement, and exposure to weather without failure due to

defective manufacture, fabrication, installation, or other defects in construction. Roofing and flashings shall remain watertight.

1. Accelerated Weathering: Roof membrane shall withstand 2000 hours of exposure when tested according to ASTM G 152, ASTM G 154, or ASTM G 155.
2. Impact Resistance: Roof membrane shall resist impact damage when tested according to ASTM D 3746, ASTM D 4272, or the Resistance to Foot Traffic Test in FM Approvals 4470.

B. Material Compatibility: Roofing materials shall be compatible with one another and adjacent materials under conditions of service and application required, as demonstrated by roof membrane manufacturer based on testing and field experience.

C. Wind Uplift Resistance: Design roofing system to resist the wind uplift pressures as indicted on the drawings when tested according to FM Approvals 4474, UL 580, or UL 1897:

D. Exterior Fire-Test Exposure: ASTM E 108 or UL 790, Class A; for application and roof slopes indicated; testing by a qualified testing agency. Identify products with appropriate markings of applicable testing agency.

E. Fire-Resistance Ratings: Comply with fire-resistance-rated assembly designs indicated. Identify products with appropriate markings of applicable testing agency.

2.2 ETHYLENE-PROPYLENE-DIENE-TERPOLYMER (EPDM) ROOFING

A. EPDM Sheet: ASTM D 4637/D 4637M, Type I, nonreinforced, EPDM sheet.

1. Basis of Design Product: Subject to compliance with requirements, provide Firestone Building Products; EcoWhite EPDM roofing system, or comparable product by one of the following:

   a. Carlisle SynTec Incorporated.
   b. GenFlex Roofing Systems.
   c. Versico Roofing Systems.

2. Thickness: 60 mils, nominal.
3. Exposed Face Color: White.
4. Source Limitations: Obtain components for roofing system from roof membrane manufacturer or manufacturers approved by roof membrane manufacturer.

2.3 AUXILIARY ROOFING MATERIALS

A. General: Auxiliary materials recommended by roofing system manufacturer for intended use and compatible with other roofing components.

1. Adhesive and Sealants: Comply with VOC limits of authorities having jurisdiction.

B. Sheet Flashing: 60-mil-thick EPDM, partially cured or cured, according to application.

C. Prefabricated Pipe Flashings: As recommended by roof membrane manufacturer.

D. Roof Vents: As recommended by roof membrane manufacturer.

1. Size: Not less than4-inch diameter.

E. Bonding Adhesive: Manufacturer's standard.

F. Modified Asphaltic Fabric-Backed Membrane Adhesive: Roofing system manufacturer's standard modified asphalt, asbestos-free, cold-applied adhesive formulated for compatibility and use with fabric-backed membrane roofing.

G. Water-Based, Fabric-Backed Membrane Adhesive: Roofing system manufacturer's standard water-based, cold-applied adhesive formulated for compatibility and use with fabric-backed membrane roofing.

H. Seaming Material: Synthetic-rubber polymer primer and 6-inch-wide minimum, butyl splice tape with release film.

I. Lap Sealant: Manufacturer's standard, single-component sealant.

J. Water Cutoff Mastic: Manufacturer's standard butyl mastic sealant.

K. Metal Termination Bars: Manufacturer's standard, predrilled stainless steel or aluminum bars, approximately 1 by 1/8-inch-thick; with anchors.

L. Metal Battens: Manufacturer's standard, aluminum-zinc-alloy-coated or zinc-coated steel sheet, approximately 1-inch wide by 0.05 inch thick, prepunched.

M. Ballast Retaining Bar: Perimeter securement system consisting of a slotted extruded-aluminum retention bar with an integrated compression fastening strip.

1. Fasteners: 1-1/2-inch stainless steel fasteners with neoprene washers.

N. Fasteners: Factory-coated steel fasteners and metal or plastic plates complying with corrosion-resistance provisions in FM Approvals 4470, designed for fastening components to substrate, and acceptable to roofing system manufacturer.

O. Miscellaneous Accessories: Provide pourable sealers, preformed cone and vent sheet flashings, molded pipe boot flashings, preformed inside and outside corner sheet flashings, reinforced EPDM securement strips, T-joint covers, in-seam sealants, termination reglets, cover strips, and other accessories.

1. Provide white flashing accessories for white EPDM membrane roofing.

2.4 ROOF INSULATION

A. General: Preformed roof insulation boards manufactured or approved by EPDM roof membrane manufacturer.

B. Polyisocyanurate Board Insulation: ASTM C 1289, Type II, Class 1, Grade 2, felt or glass-fiber mat facer on both major surfaces.

1. Manufacturers: Subject to compliance with requirements, provide products by one of the following:

a. Atlas Roofing Corporation.
b. Carlisle SynTec Incorporated.

c. Firestone Building Products.
d. GAF.
e. Johns Manville; a Berkshire Hathaway company.

2. Compressive Strength: 20 psi.
3. Size: 48 by 48 inches.
4. Thickness: As indicted on the drawings.
5. R-Value: 5.6 per inch minimum.

C. Tapered Insulation: Provide factory-tapered insulation boards.

1. Material: Match roof insulation.
2. Minimum Thickness: 1/4 inch.
3. Slope:

a. Roof Field: 1/4 inch per foot unless otherwise indicated on Drawings.
b. Saddles and Crickets: 1/2 inch per foot unless otherwise indicated on Drawings.

2.5 INSULATION ACCESSORIES

A. General: Roof insulation accessories recommended by insulation manufacturer for intended use and compatibility with other roofing system components.

B. Fasteners: Factory-coated steel fasteners and metal or plastic plates complying with corrosion-resistance provisions in FM Approvals 4470, designed for fastening roof insulation and cover boards to substrate, and acceptable to roofing system manufacturer.

C. Insulation Adhesive: Insulation manufacturer's recommended adhesive formulated to attach roof insulation to substrate or to another insulation layer by one of the following:

1. Modified asphaltic, asbestos-free, cold-applied adhesive.
2. Bead-applied, low-rise, one-component or multicomponent urethane adhesive.
3. Full-spread, spray-applied, low-rise, two-component urethane adhesive.

D. Cover Board: ASTM C 1289 Type II, Class 4, Grade 1, 1/2-inch-thick polyisocyanurate, with a minimum compressive strength of 80 psi.

2.6 ASPHALT MATERIALS

A. Asphalt Primer: ASTM D 41/D 41M.

2.7 WALKWAYS

A. Flexible Walkways: Factory-formed, nonporous, heavy-duty, slip-resisting, surface-textured walkway pads or rolls, approximately 3/16-inch-thick and acceptable to roofing system manufacturer.

1. Size: Approximately 36 by 60 inches
2. Color: Contrasting with roof membrane.

PART 3 - EXECUTION

3.1 EXAMINATION

A. Examine substrates, areas, and conditions, with Installer present, for compliance with requirements and other conditions affecting performance of the Work.

1. Verify that roof openings and penetrations are in place, curbs are set and braced, and roof-drain bodies are securely clamped in place.
2. Verify that wood blocking, curbs, and nailers are securely anchored to roof deck at penetrations and terminations and that nailers match thicknesses of insulation.
3. Verify that surface plane flatness and fastening of steel roof deck complies with requirements in Section 053100 "Steel Decking."
4. Verify that minimum concrete drying period recommended by roofing system manufacturer has passed.
5. Verify that concrete substrate is visibly dry and free of moisture, and that minimum concrete internal relative humidity is not more than 75 percent, or as recommended by roofing system manufacturer when tested according to ASTM F 2170.

    a. Test Frequency: One test probe per each 1000 sq. ft., or portion thereof,of roof deck, with not less than three test probes.
    b. Submit test reports within 24 hours of performing tests.

6. Verify that concrete-curing compounds that will impair adhesion of roofing components to roof deck have been removed.
7. Verify that joints in precast concrete roof decks have been grouted flush with top of concrete.

B. Proceed with installation only after unsatisfactory conditions have been corrected.

3.2 PREPARATION

A. Clean substrate of dust, debris, moisture, and other substances detrimental to roofing system installation according to roofing system manufacturer's written instructions. Remove sharp projections.

B. Prevent materials from entering and clogging roof drains and conductors and from spilling or migrating onto surfaces of other construction. Remove roof-drain plugs when no work is taking place or when rain is forecast.

3.3 ROOFING INSTALLATION, GENERAL

A. Install roofing system according to roofing system manufacturer's written instructions, FM Approvals' RoofNav assembly requirements, and FM Global Property Loss Prevention Data Sheet 1-29.

B. Complete terminations and base flashings and provide temporary seals to prevent water from entering completed sections of roofing system at end of workday or when rain is forecast. Remove and discard temporary seals before beginning work on adjoining roofing.

C. Install roof membrane and auxiliary materials to tie in to existing roofing to maintain weathertightness of transition.

3.4 INSULATION INSTALLATION

A. Coordinate installing roofing system components so insulation is not exposed to precipitation or left exposed at end of workday.

B. Comply with roofing system and insulation manufacturer's written instructions for installing roof insulation.

C. Installation Over Metal Decking:

1. Install base layer of insulation with end joints staggered not less than 12 inches in adjacent rows and with long joints continuous at right angle to flutes of decking.

a. Locate end joints over crests of decking.
b. Trim insulation neatly to fit around penetrations and projections, and to fit tight to intersecting sloping roof decks.
c. Make joints between adjacent insulation boards not more than 1/4 inch in width.
d. At internal roof drains, slope insulation to create a square drain sump with each side equal to the diameter of the drain bowl plus 24 inches.

1) Trim insulation so that water flow is unrestricted.

e. Fill gaps exceeding 1/4 inch with insulation.
f. Cut and fit insulation within 1/4 inch of nailers, projections, and penetrations.
g. Mechanically attach base layer of insulation using mechanical fasteners specifically designed and sized for fastening specified board-type roof insulation to metal decks.

1) Fasten insulation to resist specified uplift pressure at corners, perimeter, and field of roof.

2. Install upper layers of insulation and tapered insulation with joints of each layer offset not less than 12 inches from previous layer of insulation.

a. Install with long joints continuous and with end joints staggered not less than 12 inches in adjacent rows.
b. Trim insulation neatly to fit around penetrations and projections, and to fit tight to intersecting sloping roof decks.
c. Make joints between adjacent insulation boards not more than 1/4 inch in width.
d. At internal roof drains, slope insulation to create a square drain sump with each side equal to the diameter of the drain bowl plus 24 inches.
e. Trim insulation so that water flow is unrestricted.
f. Fill gaps exceeding 1/4 inch with insulation.
g. Cut and fit insulation within 1/4 inch of nailers, projections, and penetrations.
h. Adhere each layer of insulation to substrate using adhesive according to FM Approvals' RoofNav assembly requirements and FM Global Property Loss Prevention Data Sheet 1-29 for specified Windstorm Resistance Classification, as follows:
1) Set each layer of insulation in a uniform coverage of full-spread insulation adhesive, firmly pressing and maintaining insulation in place.

3.5 INSTALLATION OF COVER BOARDS

A. Install cover boards over insulation with long joints in continuous straight lines with end joints staggered between rows. Offset joints of insulation below a minimum of 6 inches in each direction.

1. Trim cover board neatly to fit around penetrations and projections, and to fit tight to intersecting sloping roof decks.
2. At internal roof drains, conform to slope of drain sump.

    a. Trim cover board so that water flow is unrestricted.

3. Cut and fit cover board tight to nailers, projections, and penetrations.
4. Adhere cover board to substrate using adhesive according to FM Approvals' RoofNav assembly requirements and FM Global Property Loss Prevention Data Sheet 1-29 for specified Windstorm Resistance Classification, as follows:

    a. Set cover board in ribbons of bead-applied insulation adhesive, firmly pressing and maintaining insulation in place.
    b. Set cover board in a uniform coverage of full-spread insulation adhesive, firmly pressing and maintaining insulation in place.

3.6 ADHERED ROOFING INSTALLATION

A. Adhere roof membrane over area to receive roofing according to roofing system manufacturer's written instructions.

B. Unroll membrane roof membrane and allow to relax before installing.

C. Start installation of roofing in presence of roofing system manufacturer's technical personnel.

D. Accurately align roof membrane, and maintain uniform side and end laps of minimum dimensions required by manufacturer. Stagger end laps.

E. Bonding Adhesive: Apply to substrate and underside of roof membrane at rate required by manufacturer, and allow to partially dry before installing roof membrane. Do not apply to splice area of roof membrane.

F. Hot Roofing Asphalt: Apply a solid mopping of hot roofing asphalt to substrate at temperature and rate required by manufacturer, and install fabric-backed roofing. Do not apply to splice area of roof membrane.

G. In addition to adhering, mechanically fasten roof membrane securely at terminations, penetrations, and perimeters.

H. Apply roof membrane with side laps shingled with slope of roof deck where possible.

I. Adhesive Seam Installation: Clean both faces of splice areas, apply splicing cement.

1. Firmly roll side and end laps of overlapping roof membrane to ensure a watertight seam installation.
2. Apply lap sealant and seal exposed edges of roofing terminations.
3. Apply a continuous bead of in-seam sealant before closing splice if required by roofing system manufacturer.

J. Tape Seam Installation: Clean and prime both faces of splice areas, apply splice tape.

1. Firmly roll side and end laps of overlapping roof membrane to ensure a watertight seam installation.
2. Apply lap sealant and seal exposed edges of roofing terminations.

K. Repair tears, voids, and lapped seams in roof membrane that do not comply with requirements.

L. Spread sealant or mastic bed over deck-drain flange at roof drains, and securely seal roof membrane in place with clamping ring.

3.7 BASE FLASHING INSTALLATION

A. Install sheet flashings and preformed flashing accessories, and adhere to substrates according to roofing system manufacturer's written instructions.

B. Apply bonding adhesive to substrate and underside of sheet flashing at required rate, and allow to partially dry. Do not apply to seam area of flashing.

C. Flash penetrations and field-formed inside and outside corners with cured or uncured sheet flashing.

D. Clean splice areas, apply splicing cement, and firmly roll side and end laps of overlapping sheets to ensure a watertight seam installation. Apply lap sealant and seal exposed edges of sheet flashing terminations.

E. Terminate and seal top of sheet flashings and mechanically anchor to substrate through termination bars.

3.8 WALKWAY INSTALLATION

A. Flexible Walkways: Install walkway products according to manufacturer's written instructions.

1. Install flexible walkways at locations indicated on the drawings:

2. Provide 6-inchclearance between adjoining pads.
3. Adhere walkway products to substrate with compatible adhesive according to roofing system manufacturer's written instructions.

3.9 PROTECTING AND CLEANING

A. Protect roofing system from damage and wear during remainder of construction period. When remaining construction does not affect or endanger roofing system, inspect roofing system for deterioration and damage, describing its nature and extent in a written report, with copies to Architect and Owner.

B. Correct deficiencies in or remove roofing system that does not comply with requirements, repair substrates, and repair or reinstall roofing system to a condition free of damage and deterioration at time of Substantial Completion and according to warranty requirements.

C. Clean overspray and spillage from adjacent construction using cleaning agents and procedures recommended by manufacturer of affected construction.

END OF SECTION

SECTION 076200

SHEET METAL FLASHING AND TRIM

PART 1 - GENERAL

1.1 RELATED DOCUMENTS

A. Drawings and general provisions of the Contract, including General and Supplementary Conditions and Division 01 Specification Sections, apply to this Section.

1.2 SUMMARY

A. Section Includes:

1. Manufactured reglets with counterflashing.
2. Formed roof-drainage sheet metal fabrications.
3. Formed low-slope roof sheet metal fabrications.
4. Formed steep-slope roof sheet metal fabrications.

1.3 COORDINATION

A. Coordinate sheet metal flashing and trim layout and seams with sizes and locations of penetrations to be flashed, and joints and seams in adjacent materials.

B. Coordinate sheet metal flashing and trim installation with adjoining roofing and wall materials, joints, and seams to provide leakproof, secure, and noncorrosive installation.

1.4 PREINSTALLATION MEETINGS

A. Preinstallation Conference: Conduct conference at Project site.

1. Review construction schedule. Verify availability of materials, Installer's personnel, equipment, and facilities needed to make progress and avoid delays.
2. Review special roof details, roof drainage, roof-penetration flashing, equipment curbs, and condition of other construction that affect sheet metal flashing and trim.
3. Review requirements for insurance and certificates if applicable.
4. Review sheet metal flashing observation and repair procedures after flashing installation.

1.5 ACTION SUBMITTALS

A. Product Data: For each type of product.

1. Include construction details, material descriptions, dimensions of individual components and profiles, and finishes.

B. Shop Drawings: For sheet metal flashing and trim.

1. Include plans, elevations, sections, and attachment details.
2. Detail fabrication and installation layouts, expansion-joint locations, and keyed details. Distinguish between shop- and field-assembled work.
3. Include identification of material, thickness, weight, and finish for each item and location in Project.
4. Include details for forming, including profiles, shapes, seams, and dimensions.
5. Include details for joining, supporting, and securing, including layout and spacing of fasteners, cleats, clips, and other attachments. Include pattern of seams.
6. Include details of termination points and assemblies.
7. Include details of expansion joints and expansion-joint covers, including showing direction of expansion and contraction from fixed points.
8. Include details of roof-penetration flashing.
9. Include details of edge conditions, including eaves, ridges, valleys, rakes, crickets, and counterflashings as applicable.
10. Include details of special conditions.
11. Include details of connections to adjoining work.
12. Detail formed flashing and trim at scale of not less than 1-1/2 inches per 12 inches.

C. Samples for Initial Selection: For each type of sheet metal and accessory indicated with factory-applied finishes.

D. Samples for Verification: For each type of exposed finish.

1. Sheet Metal Flashing: 12 inches long by actual width of unit, including finished seam and in required profile. Include fasteners, cleats, clips, closures, and other attachments.
2. Trim, Metal Closures, Expansion Joints, Joint Intersections, and Miscellaneous Fabrications: 12 inches long and in required profile. Include fasteners and other exposed accessories.
3. Unit-Type Accessories and Miscellaneous Materials: Full-size Sample.
4. Anodized Aluminum Samples: Samples to show full range to be expected for each color required.

1.6 INFORMATIONAL SUBMITTALS

A. Product Certificates: For each type of coping and roof edge flashing that is SPRI ES-1 tested.

B. Product Test Reports: For each product, for tests performed by a qualified testing agency.

C. Sample Warranty: For special warranty.

1.7 CLOSEOUT SUBMITTALS

A. Maintenance Data: For sheet metal flashing and trim, and its accessories, to include in maintenance manuals.

1.8 QUALITY ASSURANCE

A. Fabricator Qualifications: Employs skilled workers who custom fabricate sheet metal flashing and trim similar to that required for this Project and whose products have a record of successful in-service performance.

1.9 DELIVERY, STORAGE, AND HANDLING

A. Do not store sheet metal flashing and trim materials in contact with other materials that might cause staining, denting, or other surface damage. Store sheet metal flashing and trim materials away from uncured concrete and masonry.

B. Protect strippable protective covering on sheet metal flashing and trim from exposure to sunlight and high humidity, except to extent necessary for period of sheet metal flashing and trim installation.

1.10 WARRANTY

A. Special Warranty on Finishes: Manufacturer agrees to repair finish or replace sheet metal flashing and trim that shows evidence of deterioration of factory-applied finishes within specified warranty period.

1. Exposed Panel Finish: Deterioration includes, but is not limited to, the following:

a. Color fading more than 5 Hunter units when tested according to ASTM D 2244.
b. Chalking in excess of a No. 8 rating when tested according to ASTM D 4214.
c. Cracking, checking, peeling, or failure of paint to adhere to bare metal.

2. Finish Warranty Period: 20 years from date of Substantial Completion.

PART 2 - PRODUCTS

2.1 PERFORMANCE REQUIREMENTS

A. General: Sheet metal flashing and trim assemblies shall withstand wind loads, structural movement, thermally induced movement, and exposure to weather without failure due to defective manufacture, fabrication, installation, or other defects in construction. Completed sheet metal flashing and trim shall not rattle, leak, or loosen, and shall remain watertight.

B. Sheet Metal Standard for Flashing and Trim: Comply with NRCA's "The NRCA Roofing Manual" and SMACNA's "Architectural Sheet Metal Manual" requirements for dimensions and profiles shown unless more stringent requirements are indicated.

C. Thermal Movements: Allow for thermal movements from ambient and surface temperature changes to prevent buckling, opening of joints, overstressing of components, failure of joint sealants, failure of connections, and other detrimental effects. Base calculations on surface temperatures of materials due to both solar heat gain and nighttime-sky heat loss.

1. Temperature Change: 120 deg F, ambient; 180 deg F, material surfaces.

2.2 SHEET METALS

A. General: Protect mechanical and other finishes on exposed surfaces from damage by applying strippable, temporary protective film before shipping.

B. Aluminum Sheet: ASTM B 209, alloy as standard with manufacturer for finish required, with temper as required to suit forming operations and performance required; with smooth, flat surface.

1. As-Milled Finish: One-side bright mill.

2. Exposed Coil-Coated Finish:

a. Two-Coat Fluoropolymer: AAMA 2605. Fluoropolymer finish containing not less than 70 percent PVDF resin by weight in color coat. Prepare, pretreat, and apply coating to exposed metal surfaces to comply with coating and resin manufacturers' written instructions.

3. Color: As selected by Architect from manufacturer's full range.
4. Concealed Finish: Pretreat with manufacturer's standard white or light-colored acrylic or polyester backer finish, consisting of prime coat and wash coat with minimum total dry film thickness of 0.5 mil.

C. Stainless-Steel Sheet: ASTM A 240/A 240M or ASTM A 666, Type 316, dead soft, fully annealed; with smooth, flat surface.

1. Finish: 2D (dull, cold rolled).

2.3 UNDERLAYMENT MATERIALS

A. Felt: ASTM D 226/D 226M, Type II (No. 30), asphalt-saturated organic felt; nonperforated.

2.4 MISCELLANEOUS MATERIALS

A. General: Provide materials and types of fasteners, protective coatings, sealants, and other miscellaneous items as required for complete sheet metal flashing and trim installation and as recommended by manufacturer of primary sheet metal or manufactured item unless otherwise indicated.

B. Fasteners: Wood screws, annular threaded nails, self-tapping screws, self-locking rivets and bolts, and other suitable fasteners designed to withstand design loads and recommended by manufacturer of primary sheet metal or manufactured item.

1. General: Blind fasteners or self-drilling screws, gasketed, with hex-washer head.

a. Exposed Fasteners: Heads matching color of sheet metal using plastic caps or factory-applied coating. Provide metal-backed EPDM or PVC sealing washers under heads of exposed fasteners bearing on weather side of metal.
b. Blind Fasteners: High-strength aluminum or stainless-steel rivets suitable for metal being fastened.

2. Fasteners for Aluminum Sheet: Aluminum or Series 300 stainless steel.
3. Fasteners for Stainless-Steel Sheet: Series 300 stainless steel.

C. Sealant Tape: Pressure-sensitive, 100 percent solids, polyisobutylene compound sealant tape with release-paper backing. Provide permanently elastic, nonsag, nontoxic, nonstaining tape 1/2-inch-wide and 1/8 inch thick.

D. Elastomeric Sealant: ASTM C 920, elastomeric polyurethane polymer sealant; of type, grade, class, and use classifications required to seal joints in sheet metal flashing and trim and remain watertight.

E. Butyl Sealant: ASTM C 1311, single-component, solvent-release butyl rubber sealant; polyisobutylene plasticized; heavy bodied for hooked-type expansion joints with limited movement.

F. Epoxy Seam Sealer: Two-part, noncorrosive, aluminum seam-cementing compound, recommended by aluminum manufacturer for exterior nonmoving joints, including riveted joints.

G. Bituminous Coating: Cold-applied asphalt emulsion according to ASTM D 1187.

H. Asphalt Roofing Cement: ASTM D 4586, asbestos free, of consistency required for application.

2.5 FABRICATION, GENERAL

A. General: Custom fabricate sheet metal flashing and trim to comply with details shown and recommendations in cited sheet metal standard that apply to design, dimensions, geometry, metal thickness, and other characteristics of item required. Fabricate sheet metal flashing and trim in shop to greatest extent possible.

1. Fabricate sheet metal flashing and trim in thickness or weight needed to comply with performance requirements, but not less than that specified for each application and metal.
2. Obtain field measurements for accurate fit before shop fabrication.
3. Form sheet metal flashing and trim to fit substrates without excessive oil canning, buckling, and tool marks; true to line, levels, and slopes; and with exposed edges folded back to form hems.
4. Conceal fasteners and expansion provisions where possible. Do not use exposed fasteners on faces exposed to view.

B. Fabrication Tolerances: Fabricate sheet metal flashing and trim that is capable of installation to a tolerance of 1/4 inch in 20 feet on slope and location lines indicated on Drawings and within 1/8-inch offset of adjoining faces and of alignment of matching profiles.

C. Expansion Provisions: Form metal for thermal expansion of exposed flashing and trim.

1. Form expansion joints of intermeshing hooked flanges, not less than 1-inch deep, filled with butyl sealant concealed within joints.
2. Use lapped expansion joints only where indicated on Drawings.

D. Sealant Joints: Where movable, nonexpansion-type joints are required, form metal to provide for proper installation of elastomeric sealant according to cited sheet metal standard.

E. Fabricate cleats and attachment devices from same material as accessory being anchored or from compatible, noncorrosive metal.

F. Fabricate cleats and attachment devices of sizes as recommended by cited sheet metal standard for application, but not less than thickness of metal being secured.

G. Seams: Fabricate nonmoving seams with flat-lock seams. Form seams and seal with elastomeric sealant unless otherwise recommended by sealant manufacturer for intended use. Rivet joints where necessary for strength.

H. Seams for Aluminum: Fabricate nonmoving seams with flat-lock seams. Form seams and seal with epoxy seam sealer. Rivet joints where necessary for strength.

I. Do not use graphite pencils to mark metal surfaces.

2.6 ROOF-DRAINAGE SHEET METAL FABRICATIONS

A. Hanging Gutters: Fabricate to cross section required, complete with end pieces, outlet tubes, and other accessories as required. Fabricate in minimum 96-inch-long sections. Furnish flat-stock gutter brackets and flat-stock gutter spacers and straps fabricated from same metal as gutters, of size recommended by cited sheet metal standard but with thickness not less than twice the gutter thickness. Fabricate expansion joints, expansion-joint covers, and gutter accessories from same metal as gutters. Shop fabricate interior and exterior corners.

1. Gutter Profile: As indicated on the drawings.
2. Expansion Joints: Lap type.
3. Gutters with Girth up to 15 Inches: Fabricate from the following materials:
   a. Aluminum: 0.032 inch thick.

4. Gutters with Girth 16 to 20 Inches: Fabricate from the following materials:
   a. Aluminum: 0.040 inch thick.

5. Gutters with Girth 21 to 25 Inches: Fabricate from the following materials:
   a. Aluminum: 0.050 inch thick.

6. Gutters with Girth 26 to 30 Inches: Fabricate from the following materials:
   a. Aluminum: 0.063 inch thick.

7. Gutters with Girth 31 to 35 Inches: Fabricate from the following materials:
   a. Stainless Steel: 0.038 inch thick.

B. Downspouts: Fabricate downspouts to dimensions indicated on drawings, complete with mitered elbows. Furnish with metal hangers from same material as downspouts and anchors.

1. Fabricated Hanger Style: As selected by Architect unless indicated on the Drawings according to SMACNA's "Architectural Sheet Metal Manual."
2. Fabricate from the following materials:

   a. Aluminum: 0.024 inch thick.

2.7 LOW-SLOPE ROOF SHEET METAL FABRICATIONS

A. Roof and Roof-to-Wall Transition Expansion-Joint Cover: Fabricate from the following materials: Shop fabricate interior and exterior corners.

1. Aluminum: 0.050 inch thick.
2. Stainless Steel: 0.025 inch thick.

B. Base Flashing: Shop fabricate interior and exterior corners. Fabricate from the following materials:

1. Aluminum: 0.040 inch thick.
2. Stainless Steel: 0.019 inch thick.

C. Counterflashing: Shop fabricate interior and exterior corners. Fabricate from the following materials:

1. Aluminum: 0.032 inch thick.
2. Stainless Steel: 0.019 inch thick.

D. Flashing Receivers: Fabricate from the following materials:

1. Aluminum: 0.032 inch thick.
2. Stainless Steel: 0.016 inch thick.

E. Roof-Penetration Flashing: Fabricate from the following materials:

1. Stainless Steel: 0.019 inch thick.

F. Roof-Drain Flashing: Fabricate from the following materials:

1. Stainless Steel: 0.016 inch thick.

2.8 STEEP-SLOPE ROOF SHEET METAL FABRICATIONS

A. Apron, Step, Cricket, and Backer Flashing: Fabricate from the following materials:

1. Aluminum: 0.032 inch thick.
2. Stainless Steel: 0.016 inch thick.

B. Valley Flashing: Fabricate from the following materials:

1. Copper: 16 oz./sq. ft.
2. Stainless Steel: 0.019 inch thick.

C. Drip Edges: Fabricate from the following materials:

1. Aluminum: 0.032 inch thick.
2. Stainless Steel: 0.016 inch thick.

D. Eave, Rake, Ridge, and Hip Flashing: Fabricate from the following materials:

1. Aluminum: 0.032 inch thick.
2. Stainless Steel: 0.016 inch thick.

E. Counterflashing: Shop fabricate interior and exterior corners. Fabricate from the following materials:

1. Aluminum: 0.032 inch thick.
2. Stainless Steel: 0.019 inch thick.

F. Flashing Receivers: Fabricate from the following materials:

1. Aluminum: 0.032 inch thick.
2. Stainless Steel: 0.016 inch thick.

G. Roof-Penetration Flashing: Fabricate from the following materials:

1. Stainless Steel: 0.019 inch thick.

2.9 WALL SHEET METAL FABRICATIONS

A. Opening Flashings in Frame Construction: Fabricate head, sill, jamb, and similar flashings to extend 4 inches beyond wall openings. Form head and sill flashing with 2-inch-high, end dams. Fabricate from the following materials:

1. Aluminum: 0.032 inch thick.
2. Stainless Steel: 0.016 inch thick.

B. Wall Expansion-Joint Cover: Fabricate from the following materials:

1. Aluminum: 0.040 inch thick.
2. Stainless Steel: 0.019 inch thick.

PART 3 - EXECUTION

3.1 EXAMINATION

A. Examine substrates, areas, and conditions, with Installer present, for compliance with requirements for installation tolerances, substrate, and other conditions affecting performance of the Work.

1. Verify compliance with requirements for installation tolerances of substrates.
2. Verify that substrate is sound, dry, smooth, clean, sloped for drainage, and securely anchored.
3. Verify that air- or water-resistant barriers have been installed over sheathing or backing substrate to prevent air infiltration or water penetration.

B. Proceed with installation only after unsatisfactory conditions have been corrected.

3.2 UNDERLAYMENT INSTALLATION

A. Felt Underlayment: Install felt underlayment, wrinkle free, using adhesive to minimize use of mechanical fasteners under sheet metal flashing and trim. Apply in shingle fashion to shed water, with lapped joints of not less than 2 inches.

3.3 INSTALLATION, GENERAL

A. General: Anchor sheet metal flashing and trim and other components of the Work securely in place, with provisions for thermal and structural movement. Use fasteners, protective coatings, separators, sealants, and other miscellaneous items as required to complete sheet metal flashing and trim system.

1. Install sheet metal flashing and trim true to line, levels, and slopes. Provide uniform, neat seams with minimum exposure of welds and sealant.
2. Install sheet metal flashing and trim to fit substrates and to result in watertight performance. Verify shapes and dimensions of surfaces to be covered before fabricating sheet metal.

3. Space cleats not more than 12 inches apart. Attach each cleat with at least two fasteners. Bend tabs over fasteners.
4. Install exposed sheet metal flashing and trim with limited oil canning, and free of buckling and tool marks.
5. Torch cutting of sheet metal flashing and trim is not permitted.
6. Do not use graphite pencils to mark metal surfaces.

B. Metal Protection: Where dissimilar metals contact each other, or where metal contacts pressure-treated wood or other corrosive substrates, protect against galvanic action or corrosion by painting contact surfaces with bituminous coating or by other permanent separation as recommended by sheet metal manufacturer or cited sheet metal standard.

1. Coat concealed side of uncoated-aluminum and stainless-steel sheet metal flashing and trim with bituminous coating where flashing and trim contact wood, ferrous metal, or cementitious construction.
2. Underlayment: Where installing sheet metal flashing and trim directly on cementitious or wood substrates, install underlayment and cover with slip sheet.

C. Expansion Provisions: Provide for thermal expansion of exposed flashing and trim. Space movement joints at maximum of 10 feet with no joints within 24 inches of corner or intersection.

1. Form expansion joints of intermeshing hooked flanges, not less than 1 inch deep, filled with sealant concealed within joints.
2. Use lapped expansion joints only where indicated on Drawings.

D. Fasteners: Use fastener sizes that penetrate substrate not less than recommended by fastener manufacturer to achieve maximum pull-out resistance.

E. Conceal fasteners and expansion provisions where possible in exposed work and locate to minimize possibility of leakage. Cover and seal fasteners and anchors as required for a tight installation.

F. Seal joints as required for watertight construction.

1. Use sealant-filled joints unless otherwise indicated. Embed hooked flanges of joint members not less than 1 inch into sealant. Form joints to completely conceal sealant. When ambient temperature at time of installation is between 40 and 70 deg F, set joint members for 50 percent movement each way. Adjust setting proportionately for installation at higher ambient temperatures. Do not install sealant-type joints at temperatures below 40 deg F.
2. Prepare joints and apply sealants to comply with requirements in Section 079200 "Joint Sealants."

G. Rivets: Rivet joints in uncoated aluminum where necessary for strength.

3.4 ROOF-DRAINAGE SYSTEM INSTALLATION

A. General: Install sheet metal roof-drainage items to produce complete roof-drainage system according to cited sheet metal standard unless otherwise indicated. Coordinate installation of roof perimeter flashing with installation of roof-drainage system.

B. Hanging Gutters: Join sections with joints sealed with sealant. Provide for thermal expansion. Attach gutters at eave or fascia to firmly anchor them in position. Provide end closures and seal watertight with sealant. Slope to downspouts.

1. Fasten gutter spacers to front and back of gutter.
2. Anchor gutter with straps spaced not more than 24 inches apart to roof deck, unless otherwise indicated, and loosely lock to front gutter bead.
3. Install gutter with expansion joints at locations indicated, but not exceeding, 50 feet apart. Install expansion-joint caps.

C. Downspouts: Join sections with 1-1/2-inch telescoping joints.

1. Provide hangers with fasteners designed to hold downspouts securely to walls. Locate hangers at top and bottom and at approximately 60 inches o.c.
2. Provide elbows at base of downspout to direct water away from building where indicated on Drawings.
3. Connect downspouts to underground drainage system.

D. Expansion-Joint Covers: Install expansion-joint covers at locations and of configuration indicated. Lap joints minimum of 4 inches in direction of water flow.

3.5 ROOF FLASHING INSTALLATION

A. General: Install sheet metal flashing and trim to comply with performance requirements, sheet metal manufacturer's written installation instructions, and cited sheet metal standard. Provide concealed fasteners where possible, and set units true to line, levels, and slopes. Install work with laps, joints, and seams that are permanently watertight and weather resistant.

B. Pipe or Post Counterflashing: Install counterflashing umbrella with close-fitting collar with top edge flared for elastomeric sealant, extending minimum of 4 inches over base flashing. Install stainless-steel draw band and tighten.

C. Counterflashing: Coordinate installation of counterflashing with installation of base flashing. Insert counterflashing in reglets or receivers and fit tightly to base flashing. Extend counterflashing 4 inches over base flashing. Lap counterflashing joints minimum of 4 inches. Secure in waterproof manner by means of snap-in installation and sealant or lead wedges and sealant or interlocking folded seam or blind rivets and sealant unless otherwise indicated.

D. Roof-Penetration Flashing: Coordinate installation of roof-penetration flashing with installation of roofing and other items penetrating roof. Seal with butyl sealant and clamp flashing to pipes that penetrate roof.

3.6 WALL FLASHING INSTALLATION

A. General: Install sheet metal wall flashing to intercept and exclude penetrating moisture according to cited sheet metal standard unless otherwise indicated. Coordinate installation of wall flashing with installation of wall-opening components such as windows, doors, and louvers.

B. Through-Wall Flashing: Installation of through-wall flashing is specified in Section 042000 "Unit Masonry."

C. Reglets: Installation of reglets is specified in Section 033000 "Cast-in-Place Concrete." and Section 042000 "Unit Masonry."

D. Opening Flashings in Frame Construction: Install continuous head, sill, jamb, and similar flashings to extend 4 inches beyond wall openings.

3.7 ERECTION TOLERANCES

A. Installation Tolerances: Shim and align sheet metal flashing and trim within installed tolerance of 1/4 inch in 20 feet on slope and location lines indicated on Drawings and within 1/8-inch offset of adjoining faces and of alignment of matching profiles.

3.8 CLEANING AND PROTECTION

A. Clean exposed metal surfaces of substances that interfere with uniform oxidation and weathering.

B. Clean off excess sealants.

C. Remove temporary protective coverings and strippable films as sheet metal flashing and trim are installed unless otherwise indicated in manufacturer's written installation instructions. On completion of sheet metal flashing and trim installation, remove unused materials and clean finished surfaces as recommended by sheet metal flashing and trim manufacturer. Maintain sheet metal flashing and trim in clean condition during construction.

D. Replace sheet metal flashing and trim that have been damaged or that have deteriorated beyond successful repair by finish touchup or similar minor repair procedures.

END OF SECTION

SECTION 077100

ROOF SPECIALTIES

PART 1 - GENERAL

1.1 RELATED DOCUMENTS

A. Drawings and general provisions of the Contract, including General and Supplementary Conditions and Division 01 Specification Sections, apply to this Section.

1.2 SUMMARY

A. Section Includes:

1. Copings.
2. Roof-edge specialties.
3. Reglets and counterflashings.

B. Preinstallation Conference: Conduct conference at Project site.

1. Meet with Owner, Architect, Owner's insurer if applicable, roofing-system testing and inspecting agency representative, roofing Installer, roofing-system manufacturer's representative, Installer, structural-support Installer, and installers whose work interfaces with or affects roof specialties, including installers of roofing materials and accessories.
2. Examine substrate conditions for compliance with requirements, including flatness and attachment to structural members.
3. Review special roof details, roof drainage, and condition of other construction that will affect roof specialties.

1.3 ACTION SUBMITTALS

A. Product Data: For each type of product.

1. Include construction details, material descriptions, dimensions of individual components and profiles, and finishes.

B. Shop Drawings: For roof specialties.

1. Include plans, elevations, expansion-joint locations, keyed details, and attachments to other work. Distinguish between plant- and field-assembled work.
2. Include details for expansion and contraction; locations of expansion joints, including direction of expansion and contraction.
3. Indicate profile and pattern of seams and layout of fasteners, cleats, clips, and other attachments.
4. Detail termination points and assemblies, including fixed points.
5. Include details of special conditions.

C. Samples: For each type of roof specialty and for each color and texture specified.

D. Samples for Initial Selection: For each type of roof specialty indicated with factory-applied color finishes.

E. Samples for Verification:

1. Include Samples of each type of roof specialty to verify finish and color selection, in manufacturer's standard sizes.
2. Include copings, roof-edge specialties and reglets and counterflashings made from 12-inch lengths of full-size components in specified material, and including fasteners, cover joints, accessories, and attachments.

1.4 INFORMATIONAL SUBMITTALS

A. Qualification Data: For manufacturer.

B. Product Certificates: For each type of roof specialty.

C. Product Test Reports: For copings and roof-edge flashings, for tests performed by a qualified testing agency.

D. Sample Warranty: For manufacturer's special warranty.

1.5 CLOSEOUT SUBMITTALS

A. Maintenance Data: For roofing specialties to include in maintenance manuals.

1.6 QUALITY ASSURANCE

A. Manufacturer Qualifications: A qualified manufacturer offering products meeting requirements that are SPRI ES-1 tested to specified design pressure.

1.7 DELIVERY, STORAGE, AND HANDLING

A. Do not store roof specialties in contact with other materials that might cause staining, denting, or other surface damage. Store roof specialties away from uncured concrete and masonry.

B. Protect strippable protective covering on roof specialties from exposure to sunlight and high humidity, except to extent necessary for the period of roof-specialty installation.

1.8 FIELD CONDITIONS

A. Field Measurements: Verify profiles and tolerances of roof-specialty substrates by field measurements before fabrication, and indicate measurements on Shop Drawings.

B. Coordination: Coordinate roof specialties with flashing, trim, and construction of parapets, roof deck, roof and wall panels, and other adjoining work to provide a leakproof, secure, and noncorrosive installation.

1.9 WARRANTY

A. Special Warranty on Painted Finishes: Manufacturer agrees to repair finish or replace roof specialties that show evidence of deterioration of factory-applied finishes within specified warranty period.

1. Fluoropolymer Finish: Deterioration includes, but is not limited to, the following:

a. Color fading more than 5 Hunter units when tested according to ASTM D 2244.
b. Chalking in excess of a No. 8 rating when tested according to ASTM D 4214.
c. Cracking, checking, peeling, or failure of paint to adhere to bare metal.

2. Finish Warranty Period: 20 years from date of Substantial Completion.

PART 2 - PRODUCTS

2.1 PERFORMANCE REQUIREMENTS

A. General Performance: Roof specialties shall withstand exposure to weather and resist thermally induced movement without failure, rattling, leaking, or fastener disengagement due to defective manufacture, fabrication, installation, or other defects in construction.

B. SPRI Wind Design Standard: Manufacture and install copings and roof-edge specialties tested according to SPRI ES-1 and capable of resisting the following design pressures:

1. Design Pressure: As indicated on Drawings.

C. Thermal Movements: Allow for thermal movements from ambient and surface temperature changes to prevent buckling, opening of joints, hole elongation, overstressing of components, failure of joint sealants, failure of connections, and other detrimental effects. Provide clips that resist rotation and avoid shear stress as a result of thermal movements. Base calculations on surface temperatures of materials due to both solar heat gain and nighttime-sky heat loss.

1. Temperature Change (Range): 120 deg F, ambient; 180 deg F, material surfaces.

2.2 COPINGS

A. Metal Copings: Manufactured coping system consisting of metal coping cap in section lengths not exceeding 12 feet, concealed anchorage; with corner units, end cap units, and concealed splice plates with finish matching coping caps.

1. Manufacturers: Subject to compliance with requirements, available manufacturers offering products that may be incorporated into the Work include, but are not limited to, the following:

a. Architectural Products Company.
b. ATAS International, Inc.
c. Drexel Metals.
d. OMG EdgeSystems (formerly, W.P. Hickman).
e. Metal-Era, Inc.
f. Perimeter Systems; a division of SAF.
g. Petersen Aluminum Corporation.

2. Formed Aluminum Sheet Coping Caps: Aluminum sheet, thickness as required to meet performance requirements.

    a. Surface: Smooth, flat finish.
    b. Finish: Two-coat fluoropolymer.
    c. Color: As selected by Architect from manufacturer's full range.

3. Corners: Factory mitered and mechanically clinched and sealed watertight.
4. Coping-Cap Attachment Method: Snap-on, fabricated from coping-cap material.

    a. Snap-on Coping Anchor Plates: Concealed, galvanized-steel sheet, 12 inches wide, with integral cleats.

2.3 ROOF-EDGE SPECIALTIES

A. Roof-Edge Fascia: Manufactured, two-piece, roof-edge fascia consisting of snap-on metal fascia cover in section lengths not exceeding 12 feet and a continuous metal receiver with integral drip-edge cleat to engage fascia cover and secure single-ply roof membrane. Provide matching corner units.

1. Manufacturers: Subject to compliance with requirements, available manufacturers offering products that may be incorporated into the Work include, but are not limited to, the following:

    a. Architectural Products Company.
    b. ATAS International, Inc.
    c. Drexel Metals.
    d. OMG EdgeSystems (formerly, W.P. Hickman).
    e. Metal-Era, Inc.
    f. Perimeter Systems; a division of SAF.
    g. Petersen Aluminum Corporation.

2. Formed Aluminum Sheet Fascia Covers: Aluminum sheet, thickness as required to meet performance requirements.

    a. Surface: Smooth, flat finish.
    b. Finish: Two-coat fluoropolymer.
    c. Color: As selected by Architect from manufacturer's full range.

3. Corners: Factory mitered and mechanically clinched and sealed watertight.
4. Splice Plates: Concealed, of same material, finish, and shape as fascia cover.
5. Receiver: Extruded aluminum, 0.080 inch thick.

B. One-Piece Gravel Stops: Manufactured, one-piece, metal gravel stop in section lengths not exceeding 12 feet, with a horizontal flange and vertical leg, drain-through fascia terminating in a drip edge, and concealed splice plates of same material, finish, and shape as gravel stop. Provide matching corner units.

1. Manufacturers: Subject to compliance with requirements, available manufacturers offering products that may be incorporated into the Work include, but are not limited to, the following:

    a. Architectural Products Company.
    b. ATAS International, Inc.

c. Drexel Metals.
d. OMG EdgeSystems (formerly, W.P. Hickman).
e. Metal-Era, Inc.
f. Perimeter Systems; a division of SAF.
g. Petersen Aluminum Corporation.

2. Formed Aluminum Sheet Gravel Stops: Aluminum sheet, thickness as required to meet performance requirements.

a. Surface: Smooth, flat finish.
b. Finish: Two-coat mica fluoropolymer.
c. Color: As selected by Architect from manufacturer's full range.

3. Corners: Factory mitered and mechanically clinched and sealed watertight.
4. Accessories: Fascia extenders with continuous hold-down cleats.

2.4 REGLETS AND COUNTERFLASHINGS

A. Manufacturers: Subject to compliance with requirements, available manufacturers offering products that may be incorporated into the Work include, but are not limited to, the following:

1. Drexel Metals.
2. Fry Reglet Corporation.
3. Heckmann Building Products, Inc.
4. OMG EdgeSystems (formerly, W.P. Hickman).
5. Keystone Flashing Company, Inc.
6. Metal-Era, Inc.

B. Reglets: Manufactured units formed to provide secure interlocking of separate reglet and counterflashing pieces, from the following exposed metal:

1. Formed Aluminum: 0.024 inch thick.
2. Stainless Steel: 0.019 inch thick.
3. Corners: Factory mitered and mechanically clinched and sealed watertight.
4. Surface-Mounted Type: Provide reglets with slotted holes for fastening to substrate, with neoprene or other suitable weatherproofing washers, and with channel for sealant at top edge.
5. Concrete Type, Embedded: Provide temporary closure tape to keep reglet free of concrete materials, special fasteners for attaching reglet to concrete forms, and guides to ensure alignment of reglet section ends.
6. Masonry Type, Embedded: Provide reglets with offset top flange for embedment in masonry mortar joint.
7. Multiuse Type, Embedded: For multiuse embedment in cast-in-place concrete and masonry mortar joints.

C. Counterflashings: Manufactured units of heights to overlap top edges of base flashings by 4 inches and in lengths not exceeding 12 feet designed to snap into reglets or through-wall-flashing receiver and compress against base flashings with joints lapped, from the following exposed metal:

1. Formed Aluminum: 0.032 inch thick.
2. Stainless Steel: 0.025 inch thick.

D. Accessories:

1. Flexible-Flashing Retainer: Provide resilient plastic or rubber accessory to secure flexible flashing in reglet where clearance does not permit use of standard metal counterflashing or where reglet is provided separate from metal counterflashing.
2. Counterflashing Wind-Restraint Clips: Provide clips to be installed before counterflashing to prevent wind uplift of counterflashing lower edge.

E. Aluminum Finish: Two-coat fluoropolymer.

1. Color: As selected by Architect from manufacturer's full range.

F. Stainless-Steel Finish: No. 2B (bright, cold rolled, unpolished).

2.5 MATERIALS

A. Aluminum Sheet: ASTM B 209, alloy as standard with manufacturer for finish required, with temper to suit forming operations and performance required.

B. Aluminum Extrusions: ASTM B 221, alloy and temper recommended by manufacturer for type of use and finish indicated, finished as follows:

C. Stainless-Steel Sheet: ASTM A 240/A 240M or ASTM A 666, Type 304.

2.6 UNDERLAYMENT MATERIALS

A. Felt: ASTM D 226/D 226M, Type II (No. 30), asphalt-saturated organic felt, nonperforated.

2.7 MISCELLANEOUS MATERIALS

A. Fasteners: Manufacturer's recommended fasteners, suitable for application and designed to meet performance requirements. Furnish the following unless otherwise indicated:

1. Exposed Penetrating Fasteners: Gasketed screws with hex washer heads matching color of sheet metal.
2. Fasteners for Aluminum: Aluminum or Series 300 stainless steel.
3. Fasteners for Stainless-Steel Sheet: Series 300 stainless steel.

B. Elastomeric Sealant: ASTM C 920, elastomeric polyurethane polymer sealant of type, grade, class, and use classifications required by roofing-specialty manufacturer for each application.

C. Butyl Sealant: ASTM C 1311, single-component, solvent-release butyl rubber sealant; polyisobutylene plasticized; heavy bodied for hooked-type joints with limited movement.

D. Bituminous Coating: Cold-applied asphalt emulsion complying with ASTM D 1187/D 1187M.

E. Asphalt Roofing Cement: ASTM D 4586, asbestos free, of consistency required for application.

2.8 FINISHES

A. Comply with NAAMM's "Metal Finishes Manual for Architectural and Metal Products" for recommendations for applying and designating finishes.

B. Protect mechanical and painted finishes on exposed surfaces from damage by applying a strippable, temporary protective covering before shipping.

C. Appearance of Finished Work: Noticeable variations in same piece are unacceptable. Variations in appearance of adjoining components are acceptable if they are within the range of approved Samples and are assembled or installed to minimize contrast.

D. Coil-Coated Aluminum Sheet Finishes:

1. High-Performance Organic Finish: Prepare, pretreat, and apply coating to exposed metal surfaces to comply with coating and resin manufacturers' written instructions.

a. Two-Coat Fluoropolymer: AAMA 2605. Fluoropolymer finish containing not less than 70 percent PVDF resin by weight in color coat. Prepare, pretreat, and apply coating to exposed metal surfaces to comply with coating and resin manufacturers' written instructions.
b. Concealed Surface Finish: Apply pretreatment and manufacturer's standard acrylic or polyester backer finish consisting of prime coat and wash coat with a minimum total dry film thickness of 0.5 mil.

E. Aluminum Extrusion Finishes:

1. High-Performance Organic Finish: Prepare, pretreat, and apply coating to exposed metal surfaces to comply with coating and resin manufacturers' written instructions.

a. Two-Coat Fluoropolymer: AAMA 2605. Fluoropolymer finish containing not less than 70 percent PVDF resin by weight in color coat. Prepare, pretreat, and apply coating to exposed metal surfaces to comply with coating and resin manufacturers' written instructions.
b. Concealed Surface Finish: Apply pretreatment and manufacturer's standard acrylic or polyester backer finish consisting of prime coat and wash coat with a minimum total dry film thickness of 0.5 mil.

PART 3 - EXECUTION

3.1 EXAMINATION

A. Examine substrates, areas, and conditions, with Installer present, to verify actual locations, dimensions, and other conditions affecting performance of the Work.

B. Examine walls, roof edges, and parapets for suitable conditions for roof specialties.

C. Verify that substrate is sound, dry, smooth, clean, sloped for drainage where applicable, and securely anchored.

D. Proceed with installation only after unsatisfactory conditions have been corrected.

3.2 UNDERLAYMENT INSTALLATION

A. Felt Underlayment: Install with adhesive for temporary anchorage to minimize use of mechanical fasteners under roof specialties. Apply in shingle fashion to shed water, with lapped joints of not less than 2 inches.

3.3 INSTALLATION, GENERAL

A. General: Install roof specialties according to manufacturer's written instructions. Anchor roof specialties securely in place, with provisions for thermal and structural movement. Use fasteners, solder, protective coatings, separators, underlayments, sealants, and other miscellaneous items as required to complete roof-specialty systems.

1. Install roof specialties level, plumb, true to line and elevation; with limited oil-canning and without warping, jogs in alignment, buckling, or tool marks.
2. Provide uniform, neat seams with minimum exposure of solder and sealant.
3. Install roof specialties to fit substrates and to result in weathertight performance. Verify shapes and dimensions of surfaces to be covered before manufacture.
4. Torch cutting of roof specialties is not permitted.
5. Do not use graphite pencils to mark metal surfaces.

B. Metal Protection: Protect metals against galvanic action by separating dissimilar metals from contact with each other or with corrosive substrates by painting contact surfaces with bituminous coating or by other permanent separation as recommended by manufacturer.

1. Coat concealed side of uncoated aluminum and stainless-steel roof specialties with bituminous coating where in contact with wood, ferrous metal, or cementitious construction.
2. Bed flanges in thick coat of asphalt roofing cement where required by manufacturers of roof specialties for waterproof performance.

C. Expansion Provisions: Allow for thermal expansion of exposed roof specialties.

1. Space movement joints at a maximum of 12 feet with no joints within 18 inches of corners or intersections unless otherwise indicated on Drawings.
2. When ambient temperature at time of installation is between 40 and 70 deg F, set joint members for 50 percent movement each way. Adjust setting proportionately for installation at higher ambient temperatures.

D. Fastener Sizes: Use fasteners of sizes that penetrate substrate not less than recommended by fastener manufacturer to achieve maximum pull-out resistance.

E. Seal concealed joints with butyl sealant as required by roofing-specialty manufacturer.

F. Seal joints as required for weathertight construction. Place sealant to be completely concealed in joint. Do not install sealants at temperatures below 40 deg F.

3.4 COPING INSTALLATION

A. Install cleats, anchor plates, and other anchoring and attachment accessories and devices with concealed fasteners.

B. Anchor copings with manufacturer's required devices, fasteners, and fastener spacing to meet performance requirements.

1. Interlock face and back leg drip edges of snap-on coping cap into cleated anchor plates anchored to substrate at manufacturer's required spacing that meets performance requirements.

3.5 ROOF-EDGE SPECIALTIES INSTALLATION

A. Install cleats, cants, and other anchoring and attachment accessories and devices with concealed fasteners.

B. Anchor roof edgings with manufacturer's required devices, fasteners, and fastener spacing to meet performance requirements.

3.6 REGLET AND COUNTERFLASHING INSTALLATION

A. General: Coordinate installation of reglets and counterflashings with installation of base flashings.

B. Embedded Reglets: See Section 033000 "Cast-in-Place Concrete" and Section 042000 "Unit Masonry" for installation of reglets.

C. Surface-Mounted Reglets: Install reglets to receive flashings where flashing without embedded reglets is indicated on Drawings. Install at height so that inserted counterflashings overlap 4 inches over top edge of base flashings.

D. Counterflashings: Insert counterflashings into reglets or other indicated receivers; ensure that counterflashings overlap 4 inches over top edge of base flashings. Lap counterflashing joints a minimum of 4 inches and bed with butyl sealant. Fit counterflashings tightly to base flashings.

3.7 CLEANING AND PROTECTION

A. Clean exposed metal surfaces of substances that interfere with uniform oxidation and weathering.

B. Remove temporary protective coverings and strippable films as roof specialties are installed. On completion of installation, clean finished surfaces, including removing unused fasteners, metal filings, pop rivet stems, and pieces of flashing. Maintain roof specialties in a clean condition during construction.

C. Replace roof specialties that have been damaged or that cannot be successfully repaired by finish touchup or similar minor repair procedures.

END OF SECTION

SECTION 077200

ROOF ACCESSORIES

PART 1 - GENERAL

1.1 RELATED DOCUMENTS

A. Drawings and general provisions of the Contract, including General and Supplementary Conditions and Division 01 Specification Sections, apply to this Section.

1.2 SUMMARY

A. Section Includes:

1. Roof hatches.
2. Preformed flashing sleeves.

1.3 COORDINATION

A. Coordinate layout and installation of roof accessories with roofing membrane and base flashing and interfacing and adjoining construction to provide a leakproof, weathertight, secure, and noncorrosive installation.

B. Coordinate dimensions with rough-in information or Shop Drawings of equipment to be supported.

1.4 ACTION SUBMITTALS

A. Product Data: For each type of roof accessory.

1. Include construction details, material descriptions, dimensions of individual components and profiles, and finishes.

B. Shop Drawings: For roof accessories.

1. Include plans, elevations, keyed details, and attachments to other work. Indicate dimensions, loadings, and special conditions. Distinguish between plant- and field-assembled work.

C. Samples: For each exposed product and for each color and texture specified, prepared on Samples of size to adequately show color.

D. Delegated-Design Submittal: For roof curbs and equipment supports indicated to comply with performance requirements and design criteria, including analysis data signed and sealed by the qualified professional engineer responsible for their preparation.

1. Detail mounting, securing, and flashing of roof-mounted items to roof structure. Indicate coordinating requirements with roof membrane system.

1.5 INFORMATIONAL SUBMITTALS

A. Coordination Drawings: Roof plans, drawn to scale, and coordinating penetrations and roof-mounted items. Show the following:

1. Size and location of roof accessories specified in this Section.
2. Method of attaching roof accessories to roof or building structure.
3. Other roof-mounted items including mechanical and electrical equipment, ductwork, piping, and conduit.
4. Required clearances.

B. Sample Warranties: For manufacturer's special warranties.

1.6 CLOSEOUT SUBMITTALS

A. Operation and Maintenance Data: For roof accessories to include in operation and maintenance manuals.

1.7 WARRANTY

A. Special Warranty on Painted Finishes: Manufacturer's standard form in which manufacturer agrees to repair finishes or replace roof accessories that show evidence of deterioration of factory-applied finishes within specified warranty period.

1. Fluoropolymer Finish: Deterioration includes, but is not limited to, the following:

a. Color fading more than 5 Hunter units when tested according to ASTM D 2244.
b. Chalking in excess of a No. 8 rating when tested according to ASTM D 4214.
c. Cracking, checking, peeling, or failure of paint to adhere to bare metal.

2. Finish Warranty Period: 20 years from date of Substantial Completion.

PART 2 - PRODUCTS

2.1 PERFORMANCE REQUIREMENTS

A. General Performance: Roof accessories shall withstand exposure to weather and resist thermally induced movement without failure, rattling, leaking, or fastener disengagement due to defective manufacture, fabrication, installation, or other defects in construction.

B. Delegated Design: Engage a qualified professional engineer, as defined in Section 014000 "Quality Requirements," to design roof curbs and equipment supports to comply with wind performance requirements, including comprehensive engineering analysis by a qualified professional engineer, using performance requirements and design criteria indicated.

2.2 ROOF HATCH

A. Roof Hatches: Metal roof-hatch units with lids and insulated double-walled curbs, welded or mechanically fastened and sealed corner joints, continuous lid-to-curb counterflashing and

weathertight perimeter gasketing, stepped integral metal cant raised the thickness of roof insulation, and integrally formed deck-mounting flange at perimeter bottom.

1. Basis of Design Product: Subject to compliance with requirements, provide Bilco Company; F-50, or comparable product by one of the following:

    a. Babcock-Davis.
    b. Dur-Red Products.

B. Type and Size: Single-leaf lid, 48 by 48 inches.

C. Loads: Minimum 40-lbf/sq. ft. external live load and 20-lbf/sq. ft. internal uplift load.

D. Hatch Material: Aluminum sheet.

1. Thickness: Manufacturer's standard thickness for hatch size indicated.
2. Finish: Baked enamel or powder coat.
3. Color: As selected by Architect from manufacturer's full range.

E. Construction:

1. Insulation: Glass-fiber board.

    a. R-Value: 12.0 according to ASTM C 1363.
2. Hatch Lid: Opaque, insulated, and double walled, with manufacturer's standard metal liner of same material and finish as outer metal lid.
3. Curb Liner: Manufacturer's standard, of same material and finish as metal curb.
4. On ribbed or fluted metal roofs, form flange at perimeter bottom to conform to roof profile.
5. Fabricate curbs to minimum height of 12 inches above roofing surface unless otherwise indicated.

F. Hardware: Spring operators, hold-open arm, galvanized-steel spring latch with turn handles, stainless-steel butt- or pintle-type hinge system, and padlock hasps inside and outside.

1. Provide two-point latch on lids larger than 84 inches.

G. Safety Railing System: Roof-hatch manufacturer's standard system including rails, clamps, fasteners, safety barrier at railing opening, and accessories required for a complete installation; attached to roof hatch and complying with 29 CFR 1910.23 requirements and authorities having jurisdiction.

1. Height: 42 inches above finished roof deck.
2. Posts and Rails: Galvanized-steel pipe, 1-1/4 inches in diameter or galvanized-steel tube, 1-5/8 inches in diameter.
3. Flat Bar: Galvanized steel, 2 inches high by 3/8 inch thick.
4. Maximum Opening Size: System constructed to prevent passage of a sphere 21 inches in diameter.
5. Self-Latching Gate: Fabricated of same materials and rail spacing as safety railing system. Provide manufacturer's standard hinges and self-latching mechanism.
6. Post and Rail Tops and Ends: Weather resistant, closed or plugged with prefabricated end fittings.
7. Provide weep holes or another means to drain entrapped water in hollow sections of handrail and railing members.
8. Fabricate joints exposed to weather to be watertight.
9. Fasteners: Manufacturer's standard, finished to match railing system.

10. Finish: Manufacturer's standard.

    a. Color: High visibility safety yellow.

H. Ladder-Assist Post: Roof-hatch manufacturer's standard device for attachment to roof-access ladder.

1. Operation: Post locks in place on full extension; release mechanism returns post to closed position.
2. Height: 42 inches above finished roof deck.
3. Material: Steel tube.
4. Post: 1-5/8-inch-diameter pipe.
5. Finish: Manufacturer's standard baked enamel or powder coat.

    a. Color: As selected by Architect from manufacturer's full range.

2.3 PREFORMED FLASHING SLEEVES

A. Exhaust Vent Flashing: Double-walled metal flashing sleeve or boot, insulation filled, with integral deck flange, 12 inches high, with removable metal hood and slotted metal collar.

1. Manufacturers: Subject to compliance with requirements, provide products by one of the following:

    a. Custom Solution Roof and Metal Products.
    b. Menzies Metal Products.
    c. Thaler Metal Industries Ltd.

2. Metal: Aluminum sheet, 0.063 inch thick.
3. Diameter: As indicated on Drawings.
4. Finish: Manufacturer's standard.

B. Vent Stack Flashing: Metal flashing sleeve, uninsulated, with integral deck flange.

1. Manufacturers: Subject to compliance with requirements, provide products by one of the following:

    a. Custom Solution Roof and Metal Products.
    b. Menzies Metal Products.
    c. Milcor; Commercial Products Group of Hart & Cooley, Inc.
    d. Thaler Metal Industries Ltd.

2. Metal: Aluminum sheet, 0.063 inch thick.
3. Height and Diameter: As indicated on Drawings.
4. Finish: Manufacturer's standard.

2.4 METAL MATERIALS

A. Zinc-Coated (Galvanized) Steel Sheet: ASTM A 653/A 653M, G90 coating designation.

1. Baked-Enamel or Powder-Coat Finish: After cleaning and pretreating, apply manufacturer's standard two-coat, baked-on finish consisting of prime coat and thermosetting topcoat to a minimum dry film thickness of 2 mils.

2. Concealed Finish: Pretreat with manufacturer's standard white or light-colored acrylic or polyester-backer finish consisting of prime coat and wash coat, with a minimum total dry film thickness of 0.5 mil.

B. Aluminum Sheet: ASTM B 209, manufacturer's standard alloy for finish required, with temper to suit forming operations and performance required.

1. Exposed Coil-Coated Finish: Prepare, pretreat, and apply coating to exposed metal surfaces to comply with coating and resin manufacturers' written instructions.

a. Two-Coat Fluoropolymer Finish: AAMA 2605. System consisting of primer and fluoropolymer color topcoat containing not less than 70 percent PVDF resin by weight.

2. Concealed Finish: Pretreat with manufacturer's standard white or light-colored acrylic or polyester-backer finish consisting of prime coat and wash coat, with a minimum total dry film thickness of 0.5 mil.

C. Aluminum Extrusions and Tubes: ASTM B 221, manufacturer's standard alloy and temper for type of use, finished to match assembly where used; otherwise mill finished.

D. Steel Shapes: ASTM A 36/A 36M, hot-dip galvanized according to ASTM A 123/A 123M unless otherwise indicated.

E. Steel Tube: ASTM A 500/A 500M, round tube.

F. Galvanized-Steel Tube: ASTM A 500/A 500M, round tube, hot-dip galvanized according to ASTM A 123/A 123M.

G. Steel Pipe: ASTM A 53/A 53M, galvanized.

2.5 MISCELLANEOUS MATERIALS

A. General: Provide materials and types of fasteners, protective coatings, sealants, and other miscellaneous items required by manufacturer for a complete installation.

B. Glass-Fiber Board Insulation: ASTM C 726, nominal density of 3 lb/cu. ft., thermal resistivity of 4.3 deg F x h x sq. ft./Btu x in. at 75 deg F, thickness as indicated.

C. Polyisocyanurate Board Insulation: ASTM C 1289, thickness and thermal resistivity as indicated.

D. Wood Nailers: As specified in Section 061000 "Rough Carpentry."

E. Bituminous Coating: Cold-applied asphalt emulsion complying with ASTM D 1187/D 1187M.

F. Underlayment:

1. Felt: ASTM D 226/D 226M, Type II (No. 30), asphalt-saturated organic felt, nonperforated.
2. Fasteners: Roof accessory manufacturer's recommended fasteners suitable for application and metals being fastened. Match finish of exposed fasteners with finish of material being fastened. Provide nonremovable fastener heads to exterior exposed fasteners. Furnish the following unless otherwise indicated:

G. Gaskets: Manufacturer's standard tubular or fingered design of neoprene, EPDM, PVC, or silicone or a flat design of foam rubber, sponge neoprene, or cork.

H. Elastomeric Sealant: ASTM C 920, elastomeric polymer sealant as recommended by roof accessory manufacturer for installation indicated; low modulus; of type, grade, class, and use classifications required to seal joints and remain watertight.

I. Butyl Sealant: ASTM C 1311, single-component, solvent-release butyl rubber sealant; polyisobutylene plasticized; heavy bodied for expansion joints with limited movement.

J. Asphalt Roofing Cement: ASTM D 4586/D 4586M, asbestos free, of consistency required for application.

2.6 GENERAL FINISH REQUIREMENTS

A. Comply with NAAMM's "Metal Finishes Manual for Architectural and Metal Products" for recommendations for applying and designating finishes.

B. Appearance of Finished Work: Noticeable variations in same piece are not acceptable. Variations in appearance of adjoining components are acceptable if they are within the range of approved Samples and are assembled or installed to minimize contrast.

PART 3 - EXECUTION

3.1 EXAMINATION

A. Examine substrates, areas, and conditions, with Installer present, to verify actual locations, dimensions, and other conditions affecting performance of the Work.

B. Verify that substrate is sound, dry, smooth, clean, sloped for drainage, and securely anchored.

C. Verify dimensions of roof openings for roof accessories.

D. Proceed with installation only after unsatisfactory conditions have been corrected.

3.2 INSTALLATION

A. General: Install roof accessories according to manufacturer's written instructions.

1. Install roof accessories level; plumb; true to line and elevation; and without warping, jogs in alignment, buckling, or tool marks.
2. Anchor roof accessories securely in place so they are capable of resisting indicated loads.
3. Use fasteners, separators, sealants, and other miscellaneous items as required to complete installation of roof accessories and fit them to substrates.
4. Install roof accessories to resist exposure to weather without failing, rattling, leaking, or loosening of fasteners and seals.

B. Metal Protection: Protect metals against galvanic action by separating dissimilar metals from contact with each other or with corrosive substrates by painting contact surfaces with bituminous coating or by other permanent separation as recommended by manufacturer.

1. Coat concealed side of uncoated aluminum roof accessories with bituminous coating where in contact with wood, ferrous metal, or cementitious construction.
2. Underlayment: Where installing roof accessories directly on cementitious or wood substrates, install a course of underlayment and cover with manufacturer's recommended slip sheet.
3. Bed flanges in thick coat of asphalt roofing cement where required by manufacturers of roof accessories for waterproof performance.

C. Roof Curb Installation: Install each roof curb so top surface is level.

D. Equipment Support Installation: Install equipment supports so top surfaces are level with each other.

E. Roof-Hatch Installation:

1. Verify that roof hatch operates properly. Clean, lubricate, and adjust operating mechanism and hardware.
2. Attach safety railing system to roof-hatch curb.
3. Attach ladder-assist post according to manufacturer's written instructions.

F. Preformed Flashing-Sleeve Installation: Secure flashing sleeve to roof membrane according to flashing-sleeve manufacturer's written instructions; flash sleeve flange to surrounding roof membrane according to roof membrane manufacturer's instructions.

3.3 REPAIR AND CLEANING

A. Galvanized Surfaces: Clean field welds, bolted connections, and abraded areas and repair galvanizing according to ASTM A 780/A 780M.

B. Touch up factory-primed surfaces with compatible primer ready for field painting according to Section 099113 "Exterior Painting."

C. Clean exposed surfaces according to manufacturer's written instructions.

D. Clean off excess sealants.

E. Replace roof accessories that have been damaged or that cannot be successfully repaired by finish touchup or similar minor repair procedures.

END OF SECTION

SECTION 078100

APPLIED FIREPROOFING

PART 1 - GENERAL

1.1 RELATED DOCUMENTS

A. Drawings and general provisions of the Contract, including General and Supplementary Conditions and Division 01 Specification Sections, apply to this Section.

1.2 SUMMARY

A. Section includes sprayed fire-resistive materials.

1.3 DEFINITIONS

A. SFRM: Sprayed fire-resistive material.

1.4 PREINSTALLATION MEETINGS

A. Preinstallation Conference: Conduct conference at Project site.

1. Review products, design ratings, restrained and unrestrained conditions, densities, thicknesses, bond strengths, and other performance requirements.

1.5 ACTION SUBMITTALS

A. Product Data: For each type of product.

B. Shop Drawings: Structural framing plans indicating the following:

1. Extent of fireproofing for each construction and fire-resistance rating.
2. Applicable fire-resistance design designations of a qualified testing and inspecting agency acceptable to authorities having jurisdiction.
3. Minimum fireproofing thicknesses needed to achieve required fire-resistance rating of each structural component and assembly.
4. Treatment of fireproofing after application.

C. Samples: For each exposed product and for each color and texture specified, in manufacturer's standard dimensions in size.

1.6 INFORMATIONAL SUBMITTALS

A. Qualification Data: For Installer and testing agency.

B. Product Certificates: For each type of fireproofing.

C. Evaluation Reports: For fireproofing, from ICC-ES.

D. Preconstruction Test Reports: For fireproofing.

E. Field quality-control reports.

1.7 QUALITY ASSURANCE

A. Installer Qualifications: A firm or individual certified, licensed, or otherwise qualified by fireproofing manufacturer as experienced and with sufficient trained staff to install manufacturer's products according to specified requirements.

B. Mockups: Build mockups to verify selections made under Sample submittals and to demonstrate aesthetic effects.

1. Build mockup of each type of fireproofing and different substrate and each required finish as shown on Drawings.
2. Approval of mockups does not constitute approval of deviations from the Contract Documents contained in mockups unless Architect specifically approves such deviations in writing.

1.8 PRECONSTRUCTION TESTING

A. Preconstruction Testing Service: Engage a qualified testing agency to perform preconstruction testing on field mockups of fireproofing.

1. Provide test specimens and assemblies representative of proposed materials and construction.

B. Preconstruction Adhesion and Compatibility Testing: Test for compliance with requirements for specified performance and test methods.

1. Bond Strength: Test for cohesive and adhesive strength according to ASTM E 736. Provide bond strength indicated in referenced fire-resistance design, but not less than minimum specified in Part 2.
2. Density: Test for density according to ASTM E 605. Provide density indicated in referenced fire-resistance design, but not less than minimum specified in Part 2.
3. Verify that manufacturer, through its own laboratory testing or field experience, attests that primers or coatings are compatible with fireproofing.
4. Schedule sufficient time for testing and analyzing results to prevent delaying the Work.
5. For materials failing tests, obtain applied-fireproofing manufacturer's written instructions for corrective measures including the use of specially formulated bonding agents or primers.

1.9 PROJECT CONDITIONS

A. Environmental Limitations: Do not apply fireproofing when ambient or substrate temperature is 44 deg F or lower unless temporary protection and heat are provided to maintain temperature at or above this level for 24 hours before, during, and for 24 hours after product application.

B. Ventilation: Ventilate building spaces during and after application of fireproofing, providing complete air exchanges according to manufacturer's written instructions. Use natural means or, if they are inadequate, forced-air circulation until fireproofing dries thoroughly.

PART 2 - PRODUCTS

2.1 PERFORMANCE REQUIREMENTS

A. Assemblies: Provide fireproofing, including auxiliary materials, according to requirements of each fire-resistance design and manufacturer's written instructions.

B. Source Limitations: Obtain fireproofing for each fire-resistance design from single source.

C. Fire-Resistance Design: Indicated on Drawings, tested according to ASTM E 119 or UL 263; testing by a qualified testing agency. Identify products with appropriate markings of applicable testing agency.

1. Steel members are to be considered unrestrained unless specifically noted otherwise.

D. Asbestos: Provide products containing no detectable asbestos.

2.2 SPRAYED FIRE-RESISTIVE MATERIALS

A. Sprayed Fire-Resistive Material: Manufacturer's standard, factory-mixed, lightweight, dry formulation, complying with indicated fire-resistance design, and mixed with water at Project site to form a slurry or mortar before conveyance and application or conveyed in a dry state and mixed with atomized water at place of application.

1. Manufacturers: Subject to compliance with requirements, available manufacturers offering products that may be incorporated into the Work include, but are not limited to, the following:

   a. Carboline Company; a subsidiary of RPM International.
   b. GCP Applied Technologies Inc. (formerly Grace Construction Products).
   c. Isolatek International.
   d. Pyrok, Inc.
   e. Schundler Company (The).
   f. Southwest Fireproofing Products Co.

2. Bond Strength: Minimum 150-lbf/sq. ft. cohesive and adhesive strength based on field testing according to ASTM E 736.
3. Density: Not less than density specified in the approved fire-resistance design, according to ASTM E 605.
4. Thickness: As required for fire-resistance design indicated, measured according to requirements of fire-resistance design or ASTM E 605, whichever is thicker, but not less than 0.375 inch.
5. Combustion Characteristics: ASTM E 136.
6. Surface-Burning Characteristics: Comply with ASTM E 84; testing by a qualified testing agency. Identify products with appropriate markings of applicable testing agency.

   a. Flame-Spread Index: 10 or less.
   b. Smoke-Developed Index: 10 or less.

7. Compressive Strength: Minimum 10 lbf/sq. in. according to ASTM E 761.
8. Corrosion Resistance: No evidence of corrosion per ASTM E 937.
9. Deflection: No cracking, spalling, or delamination per ASTM E 759.
10. Effect of Impact on Bonding: No cracking, spalling, or delamination according to ASTM E 760.
11. Air Erosion: Maximum weight loss of 0.025 g/sq. ft. in 24 hours according to ASTM E 859.
12. Fungal Resistance: Treat products with manufacturer's standard antimicrobial formulation to result in no growth on specimens per ASTM G 21 or rating of 10 according to ASTM D 3274 when tested according to ASTM D 3273.
13. Finish: As selected by Architect from manufacturer's standard finishes.

2.3 AUXILIARY MATERIALS

A. General: Provide auxiliary materials that are compatible with fireproofing and substrates and are approved by UL or another testing and inspecting agency acceptable to authorities having jurisdiction for use in fire-resistance designs indicated.

B. Substrate Primers: Primers approved by fireproofing manufacturer and complying with one or both of the following requirements:

1. Primer and substrate are identical to those tested in required fire-resistance design by UL or another testing and inspecting agency acceptable to authorities having jurisdiction.
2. Primer's bond strength in required fire-resistance design complies with specified bond strength for fireproofing and with requirements in UL's "Fire Resistance Directory" or in the listings of another qualified testing agency acceptable to authorities having jurisdiction, based on a series of bond tests according to ASTM E 736.

C. Metal Lath: Expanded metal lath fabricated from material of weight, configuration, and finish required, according to fire-resistance designs indicated and fireproofing manufacturer's written instructions. Include clips, lathing accessories, corner beads, and other anchorage devices required to attach lath to substrates and to receive fireproofing.

D. Sealer: Transparent-drying, water-dispersible, tinted protective coating recommended in writing by fireproofing manufacturer for each fire-resistance design.

PART 3 - EXECUTION

3.1 EXAMINATION

A. Examine substrates, areas, and conditions, with Installer present, for compliance with requirements for substrates and other conditions affecting performance of the Work and according to each fire-resistance design.

1. Verify that substrates are free of dirt, oil, grease, release agents, rolling compounds, mill scale, loose scale, incompatible primers, paints, and encapsulants, or other foreign substances capable of impairing bond of fireproofing with substrates under conditions of normal use or fire exposure.
2. Verify that objects penetrating fireproofing, including clips, hangers, support sleeves, and similar items, are securely attached to substrates.

3. Verify that substrates receiving fireproofing are not obstructed by ducts, piping, equipment, or other suspended construction that will interfere with fireproofing application.

B. Verify that concrete work on steel deck is complete before beginning fireproofing work.

C. Verify that roof construction, installation of rooftop HVAC equipment, and other related work are complete before beginning fireproofing work.

D. Conduct tests according to fireproofing manufacturer's written instructions to verify that substrates are free of substances capable of interfering with bond.

E. Prepare written report, endorsed by Installer, listing conditions detrimental to performance of the Work.

F. Proceed with installation only after unsatisfactory conditions have been corrected.

3.2 PREPARATION

A. Cover other work subject to damage from fallout or overspray of fire-resistive materials during application.

B. Clean substrates of substances that could impair bond of fireproofing.

C. Prime substrates where included in fire-resistance design and where recommended in writing by fireproofing manufacturer unless compatible shop primer has been applied and is in satisfactory condition to receive fireproofing.

3.3 APPLICATION

A. Construct fireproofing assemblies that are identical to fire-resistance design indicated and products as specified, tested, and substantiated by test reports; for thickness, primers, sealers, topcoats, finishing, and other materials and procedures affecting fireproofing work.

B. Comply with fireproofing manufacturer's written instructions for mixing materials, application procedures, and types of equipment used to mix, convey, and apply fireproofing; as applicable to particular conditions of installation and as required to achieve fire-resistance ratings indicated.

C. Coordinate application of fireproofing with other construction to minimize need to cut or remove fireproofing.

1. Do not begin applying fireproofing until clips, hangers, supports, sleeves, and other items penetrating fireproofing are in place.
2. Defer installing ducts, piping, and other items that would interfere with applying fireproofing until application of fireproofing is completed.

D. Metal Decks:

1. Do not apply fireproofing to underside of metal deck substrates until concrete topping, if any, is completed.
2. Do not apply fireproofing to underside of metal roof deck until roofing is completed; prohibit roof traffic during application and drying of fireproofing.

E. Install auxiliary materials as required, as detailed, and according to fire-resistance design and fireproofing manufacturer's written instructions for conditions of exposure and intended use. For auxiliary materials, use attachment and anchorage devices of type recommended in writing by fireproofing manufacturer.

F. Spray apply fireproofing to maximum extent possible. After the spraying operation in each area, complete the coverage by trowel application or other placement method recommended in writing by fireproofing manufacturer.

G. Extend fireproofing in full thickness over entire area of each substrate to be protected.

H. Install body of fireproofing in a single course unless otherwise recommended in writing by fireproofing manufacturer.

I. Where sealers are used, apply products that are tinted to differentiate them from fireproofing over which they are applied.

J. Provide a uniform finish complying with description indicated for each type of fireproofing material and matching finish approved for required mockups.

K. Cure fireproofing according to fireproofing manufacturer's written instructions.

L. Do not install enclosing or concealing construction until after fireproofing has been applied, inspected, and tested and corrections have been made to deficient applications.

3.4 FIELD QUALITY CONTROL

A. Special Inspections: Owner will engage a qualified special inspector to perform the following special inspection and prepare reports:

1. Test and inspect as required by the IBC, as indicated on Schedule of Special Inspections.

B. Perform the tests and inspections of completed Work in successive stages. Do not proceed with application of fireproofing for the next area until test results for previously completed applications of fireproofing show compliance with requirements. Tested values must equal or exceed values as specified and as indicated and required for approved fire-resistance design.

C. Fireproofing will be considered defective if it does not pass tests and inspections.

1. Remove and replace fireproofing that does not pass tests and inspections, and retest.
2. Apply additional fireproofing, per manufacturer's written instructions, where test results indicate insufficient thickness, and retest.

D. Prepare test and inspection reports.

3.5 CLEANING, PROTECTING, AND REPAIR

A. Cleaning: Immediately after completing spraying operations in each containable area of Project, remove material overspray and fallout from surfaces of other construction and clean exposed surfaces to remove evidence of soiling.

B. Protect fireproofing, according to advice of manufacturer and Installer, from damage resulting from construction operations or other causes, so fireproofing is without damage or deterioration at time of Substantial Completion.

C. As installation of other construction proceeds, inspect fireproofing and repair damaged areas and fireproofing removed due to work of other trades.

D. Repair fireproofing damaged by other work before concealing it with other construction.

E. Repair fireproofing by reapplying it using same method as original installation or using manufacturer's recommended trowel-applied product.

END OF SECTION

SECTION 078413

PENETRATION FIRESTOPPING

PART 1 - GENERAL

1.1 RELATED DOCUMENTS

A. Drawings and general provisions of the Contract, including General and Supplementary Conditions and Division 01 Specification Sections, apply to this Section.

1.2 SUMMARY

A. Section Includes:

1. Penetrations in fire-resistance-rated walls.
2. Penetrations in horizontal assemblies.
3. Penetrations in smoke barriers.

1.3 PREINSTALLATION MEETINGS

A. Preinstallation Conference: Conduct conference at Project site.

1.4 ACTION SUBMITTALS

A. Product Data: For each type of product.

B. Product Schedule: For each penetration firestopping system. Include location, illustration of firestopping system, and design designation of qualified testing and inspecting agency.

1. Engineering Judgments: Where Project conditions require modification to a qualified testing and inspecting agency's illustration for a particular penetration firestopping system, submit illustration, with modifications marked, approved by penetration firestopping system manufacturer's fire-protection engineer as an engineering judgment or equivalent fire-resistance-rated assembly. Obtain approval of authorities having jurisdiction prior to submittal.

1.5 INFORMATIONAL SUBMITTALS

A. Qualification Data: For Installer.

B. Product Test Reports: For each penetration firestopping system, for tests performed by a qualified testing agency.

1.6 CLOSEOUT SUBMITTALS

A. Installer Certificates: From Installer indicating that penetration firestopping systems have been installed in compliance with requirements and manufacturer's written instructions.

1.7 QUALITY ASSURANCE

A. Installer Qualifications: A firm that has been approved by FM Global according to FM Global 4991, "Approval of Firestop Contractors," or been evaluated by UL and found to comply with its "Qualified Firestop Contractor Program Requirements."

1.8 PROJECT CONDITIONS

A. Environmental Limitations: Do not install penetration firestopping system when ambient or substrate temperatures are outside limits permitted by penetration firestopping system manufacturers or when substrates are wet because of rain, frost, condensation, or other causes.

B. Install and cure penetration firestopping materials per manufacturer's written instructions using natural means of ventilations or, where this is inadequate, forced-air circulation.

1.9 COORDINATION

A. Coordinate construction of openings and penetrating items to ensure that penetration firestopping systems can be installed according to specified firestopping system design.

B. Coordinate sizing of sleeves, openings, core-drilled holes, or cut openings to accommodate penetration firestopping systems.

PART 2 - PRODUCTS

2.1 PERFORMANCE REQUIREMENTS

A. Fire-Test-Response Characteristics:

1. Perform penetration firestopping system tests by a qualified testing agency acceptable to authorities having jurisdiction.
2. Test per testing standards referenced in "Penetration Firestopping Systems" Article. Provide rated systems complying with the following requirements:

a. Penetration firestopping systems shall bear classification marking of a qualified testing agency.

1) UL in its "Fire Resistance Directory."
2) Intertek Group in its "Directory of Listed Building Products."
3) FM Global in its "Building Materials Approval Guide."

2.2 PENETRATION FIRESTOPPING SYSTEMS

A. Penetration Firestopping Systems: Systems that resist spread of fire, passage of smoke and other gases, and maintain original fire-resistance rating of construction penetrated. Penetration firestopping systems shall be compatible with one another, with the substrates forming openings, and with penetrating items if any.

1. Manufacturers: Subject to compliance with requirements, available manufacturers offering products that may be incorporated into the Work include, but are not limited to the following:

a. 3M Fire Protection Products.
b. GCP Applied Technologies.
c. Hilti, Inc.
d. Nelson Firestop Products.
e. NUCO Inc.
f. Passive Fire Protection Partners.
g. RectorSeal.
h. Specified Technologies, Inc.
i. Tremco, Inc.

B. Penetrations in Fire-Resistance-Rated Walls: Penetration firestopping systems with ratings determined per ASTM E 814 or UL 1479, based on testing at a positive pressure differential of 0.01-inch wg.

1. F-Rating: Not less than the fire-resistance rating of constructions penetrated.

C. Penetrations in Horizontal Assemblies: Penetration firestopping systems with ratings determined per ASTM E 814 or UL 1479, based on testing at a positive pressure differential of 0.01-inch wg.

1. F-Rating: At least one hour, but not less than the fire-resistance rating of constructions penetrated.
2. T-Rating: At least one hour, but not less than the fire-resistance rating of constructions penetrated except for floor penetrations within the cavity of a wall.
3. W-Rating: Provide penetration firestopping systems showing no evidence of water leakage when tested according to UL 1479.

D. Penetrations in Smoke Barriers: Penetration firestopping systems with ratings determined per UL 1479, based on testing at a positive pressure differential of 0.30-inch wg.

1. L-Rating: Not exceeding 5.0 cfm/sq. ft. of penetration opening at and no more than 50-cfm cumulative total for any 100 sq. ft. at both ambient and elevated temperatures.

E. Exposed Penetration Firestopping Systems: Flame-spread and smoke-developed indexes of less than 25 and 450, respectively, per ASTM E 84.

F. Accessories: Provide components for each penetration firestopping system that are needed to install fill materials and to maintain ratings required. Use only those components specified by penetration firestopping system manufacturer and approved by qualified testing and inspecting agency for conditions indicated.

1. Permanent forming/damming/backing materials.
2. Substrate primers.
3. Collars.

4. Steel sleeves.

2.3 FILL MATERIALS

A. Cast-in-Place Firestop Devices: Factory-assembled devices for use in cast-in-place concrete floors and consisting of an outer sleeve lined with an intumescent strip, a flange attached to one end of the sleeve for fastening to concrete formwork, and a neoprene gasket.

B. Latex Sealants: Single-component latex formulations that do not re-emulsify after cure during exposure to moisture.

C. Firestop Devices: Factory-assembled collars formed from galvanized steel and lined with intumescent material sized to fit specific diameter of penetrant.

D. Intumescent Composite Sheets: Rigid panels consisting of aluminum-foil-faced intumescent elastomeric sheet bonded to galvanized-steel sheet.

E. Intumescent Putties: Nonhardening, water-resistant, intumescent putties containing no solvents or inorganic fibers.

F. Intumescent Wrap Strips: Single-component intumescent elastomeric sheets with aluminum foil on one side.

G. Mortars: Prepackaged dry mixes consisting of a blend of inorganic binders, hydraulic cement, fillers and lightweight aggregate formulated for mixing with water at Project site to form a nonshrinking, homogeneous mortar.

H. Pillows/Bags: Reusable heat-expanding pillows/bags consisting of glass-fiber cloth cases filled with a combination of mineral-fiber, water-insoluble expansion agents, and fire-retardant additives. Where exposed, cover openings with steel-reinforcing wire mesh to protect pillows/bags from being easily removed.

I. Silicone Foams: Multicomponent, silicone-based liquid elastomers that, when mixed, expand and cure in place to produce a flexible, nonshrinking foam.

J. Silicone Sealants: Single-component, silicone-based, neutral-curing elastomeric sealants.

2.4 MIXING

A. Penetration Firestopping Materials: For those products requiring mixing before application, comply with penetration firestopping system manufacturer's written instructions for accurate proportioning of materials, water (if required), type of mixing equipment, selection of mixer speeds, mixing containers, mixing time, and other items or procedures needed to produce products of uniform quality with optimum performance characteristics for application indicated.

PART 3 - EXECUTION

3.1 EXAMINATION

A. Examine substrates and conditions, with Installer present, for compliance with requirements for opening configurations, penetrating items, substrates, and other conditions affecting performance of the Work.

B. Proceed with installation only after unsatisfactory conditions have been corrected.

3.2 PREPARATION

A. Surface Cleaning: Before installing penetration firestopping systems, clean out openings immediately to comply with manufacturer's written instructions and with the following requirements:

1. Remove from surfaces of opening substrates and from penetrating items foreign materials that could interfere with adhesion of penetration firestopping materials.
2. Clean opening substrates and penetrating items to produce clean, sound surfaces capable of developing optimum bond with penetration firestopping materials. Remove loose particles remaining from cleaning operation.
3. Remove laitance and form-release agents from concrete.

B. Prime substrates where recommended in writing by manufacturer using that manufacturer's recommended products and methods. Confine primers to areas of bond; do not allow spillage and migration onto exposed surfaces.

3.3 INSTALLATION

A. General: Install penetration firestopping systems to comply with manufacturer's written installation instructions and published drawings for products and applications.

B. Install forming materials and other accessories of types required to support fill materials during their application and in the position needed to produce cross-sectional shapes and depths required to achieve fire ratings.

1. After installing fill materials and allowing them to fully cure, remove combustible forming materials and other accessories not forming permanent components of firestopping.

C. Install fill materials by proven techniques to produce the following results:

1. Fill voids and cavities formed by openings, forming materials, accessories and penetrating items to achieve required fire-resistance ratings.
2. Apply materials so they contact and adhere to substrates formed by openings and penetrating items.
3. For fill materials that will remain exposed after completing the Work, finish to produce smooth, uniform surfaces that are flush with adjoining finishes.

3.4 IDENTIFICATION

A. Wall Identification: Permanently label walls containing penetration firestopping systems with the words "FIRE AND/OR SMOKE BARRIER - PROTECT ALL OPENINGS," using lettering not less than 3 inches high and with minimum 0.375-inch strokes.

1. Locate in accessible concealed floor, floor-ceiling, or attic space at 15 feet from end of wall and at intervals not exceeding 30 feet.

B. Penetration Identification: Identify each penetration firestopping system with legible metal or plastic labels. Attach labels permanently to surfaces adjacent to and within 6 inches of penetration firestopping system edge so labels are visible to anyone seeking to remove penetrating items or firestopping systems. Use mechanical fasteners or self-adhering-type labels with adhesives capable of permanently bonding labels to surfaces on which labels are placed. Include the following information on labels:

1. The words "Warning - Penetration Firestopping - Do Not Disturb. Notify Building Management of Any Damage."
2. Contractor's name, address, and phone number.
3. Designation of applicable testing and inspecting agency.
4. Date of installation.
5. Manufacturer's name.
6. Installer's name.

3.5 FIELD QUALITY CONTROL

A. Owner will engage a qualified testing agency to perform tests and inspections according to ASTM E 2174.

B. Where deficiencies are found or penetration firestopping system is damaged or removed because of testing, repair or replace penetration firestopping system to comply with requirements.

C. Proceed with enclosing penetration firestopping systems with other construction only after inspection reports are issued and installations comply with requirements.

3.6 CLEANING AND PROTECTION

A. Clean off excess fill materials adjacent to openings as the Work progresses by methods and with cleaning materials that are approved in writing by penetration firestopping system manufacturers and that do not damage materials in which openings occur.

B. Provide final protection and maintain conditions during and after installation that ensure that penetration firestopping systems are without damage or deterioration at time of Substantial Completion. If, despite such protection, damage or deterioration occurs, immediately cut out and remove damaged or deteriorated penetration firestopping material and install new materials to produce systems complying with specified requirements.

3.7 PENETRATION FIRESTOPPING SYSTEM SCHEDULE

A. Where UL-classified systems are indicated, they refer to system numbers in UL's "Fire Resistance Directory" under product Category XHEZ.

END OF SECTION

SECTION 078443

JOINT FIRESTOPPING

PART 1 - GENERAL

1.1 RELATED DOCUMENTS

A. Drawings and general provisions of the Contract, including General and Supplementary Conditions and Division 01 Specification Sections, apply to this Section.

1.2 SUMMARY

A. Section Includes:

1. Joints in or between fire-resistance-rated constructions.
2. Joints at exterior curtain-wall/floor intersections.
3. Joints in smoke barriers.

1.3 PREINSTALLATION MEETINGS

A. Preinstallation Conference: Conduct conference at Project site.

1.4 ACTION SUBMITTALS

A. Product Data: For each type of product.

B. Product Schedule: For each joint firestopping system. Include location, illustration of firestopping system, and design designation of qualified testing agency.

1. Engineering Judgments: Where Project conditions require modification to a qualified testing agency's illustration for a particular joint firestopping system condition, submit illustration, with modifications marked, approved by joint firestopping system manufacturer's fire-protection engineer as an engineering judgment or equivalent fire-resistance-rated assembly.

1.5 INFORMATIONAL SUBMITTALS

A. Qualification Data: For Installer.

B. Product Test Reports: For each joint firestopping system, for tests performed by a qualified testing agency.

C. Installer Certificates: From Installer indicating that joint firestopping systems have been installed in compliance with requirements and manufacturer's written instructions.

1.6 QUALITY ASSURANCE

A. Installer Qualifications: A firm that has been approved by FM Global according to FM Global 4991, "Approval of Firestop Contractors," or been evaluated by UL and found to comply with UL's "Qualified Firestop Contractor Program Requirements."

1.7 FIELD CONDITIONS

A. Environmental Limitations: Do not install joint firestopping systems when ambient or substrate temperatures are outside limits permitted by joint firestopping system manufacturers or when substrates are wet due to rain, frost, condensation, or other causes.

B. Install and cure joint firestopping systems per manufacturer's written instructions using natural means of ventilation or, where this is inadequate, forced-air circulation.

1.8 COORDINATION

A. Coordinate construction of joints to ensure that joint firestopping systems can be installed according to specified firestopping system design.

B. Coordinate sizing of joints to accommodate joint firestopping systems.

PART 2 - PRODUCTS

2.1 PERFORMANCE REQUIREMENTS

A. Fire-Test-Response Characteristics:

1. Perform joint firestopping system tests by a qualified testing agency acceptable to authorities having jurisdiction.
2. Test per testing standards referenced in "Joint Firestopping Systems" Article. Provide rated systems complying with the following requirements:

a. Joint firestopping systems shall bear classification marking of a qualified testing agency.

1) UL in its "Fire Resistance Directory."

2.2 JOINT FIRESTOPPING SYSTEMS

A. Joint Firestopping Systems: Systems that resist spread of fire, passage of smoke and other gases, and maintain original fire-resistance rating of assemblies in or between which joint firestopping systems are installed. Joint firestopping systems shall accommodate building movements without impairing their ability to resist the passage of fire and hot gases.

1. Manufacturers: Subject to compliance with requirements, available manufacturers offering products that may be incorporated into the Work include, but are not limited to, the following:

a. 3M Fire Protection Products.
b. Hilti, Inc.
c. Roxul Inc.

d. Thermafiber, Inc.; an Owens Corning company.
e. Tremco, Inc.

B. Joints in or between Fire-Resistance-Rated Construction: Provide joint firestopping systems with ratings determined per ASTM E 1966 or UL 2079.

1. Fire-Resistance Rating: Equal to or exceeding the fire-resistance rating of the wall, floor, or roof in or between which it is installed.

C. Joints at Exterior Curtain-Wall/Floor Intersections: Provide joint firestopping systems with rating determined per ASTM E 2307.

1. F-Rating: Equal to or exceeding the fire-resistance rating of the floor assembly.

D. Joints in Smoke Barriers: Provide fire-resistive joint systems with ratings determined per UL 2079 based on testing at a positive pressure differential of 0.30-inch wg.

1. L-Rating: Not exceeding 5.0 cfm/ft. of joint at both ambient and elevated temperatures.

E. Exposed Joint Firestopping Systems: Flame-spread and smoke-developed indexes of less than 25 and 450, respectively, as determined per ASTM E 84.

F. Accessories: Provide components of fire-resistive joint systems, including primers and forming materials, that are needed to install elastomeric fill materials and to maintain ratings required. Use only components specified by joint firestopping system manufacturer and approved by the qualified testing agency for conditions indicated.

PART 3 - EXECUTION

3.1 EXAMINATION

A. Examine substrates and conditions, with Installer present, for compliance with requirements for joint configurations, substrates, and other conditions affecting performance of the Work.

B. Proceed with installation only after unsatisfactory conditions have been corrected.

3.2 PREPARATION

A. Surface Cleaning: Before installing fire-resistive joint systems, clean joints immediately to comply with fire-resistive joint system manufacturer's written instructions and the following requirements:

1. Remove from surfaces of joint substrates foreign materials that could interfere with adhesion of elastomeric fill materials or compromise fire-resistive rating.
2. Clean joint substrates to produce clean, sound surfaces capable of developing optimum bond with elastomeric fill materials. Remove loose particles remaining from cleaning operation.
3. Remove laitance and form-release agents from concrete.

B. Prime substrates where recommended in writing by joint firestopping system manufacturer using that manufacturer's recommended products and methods. Confine primers to areas of bond; do not allow spillage and migration onto exposed surfaces.

3.3 INSTALLATION

A. General: Install fire-resistive joint systems to comply with manufacturer's written installation instructions and published drawings for products and applications indicated.

B. Install forming materials and other accessories of types required to support elastomeric fill materials during their application and in position needed to produce cross-sectional shapes and depths required to achieve fire ratings indicated.

1. After installing elastomeric fill materials and allowing them to fully cure, remove combustible forming materials and other accessories not indicated as permanent components of fire-resistive joint system.

C. Install elastomeric fill materials for fire-resistive joint systems by proven techniques to produce the following results:

1. Elastomeric fill voids and cavities formed by joints and forming materials as required to achieve fire-resistance ratings indicated.
2. Apply elastomeric fill materials so they contact and adhere to substrates formed by joints.
3. For elastomeric fill materials that will remain exposed after completing the Work, finish to produce smooth, uniform surfaces that are flush with adjoining finishes.

3.4 IDENTIFICATION

A. Joint Identification: Identify joint firestopping systems with legible metal or plastic labels. Attach labels permanently to surfaces adjacent to and within 6 inches of joint edge so labels are visible to anyone seeking to remove or joint firestopping system. Use mechanical fasteners or self-adhering-type labels with adhesives capable of permanently bonding labels to surfaces on which labels are placed. Include the following information on labels:

1. The words "Warning - Joint Firestopping - Do Not Disturb. Notify Building Management of Any Damage."
2. Contractor's name, address, and phone number.
3. Designation of applicable testing agency.
4. Date of installation.
5. Manufacturer's name.
6. Installer's name.

3.5 FIELD QUALITY CONTROL

A. Inspecting Agency: Owner will engage a qualified testing agency to perform tests and inspections according to ASTM E 2393.

B. Where deficiencies are found or joint firestopping systems are damaged or removed due to testing, repair or replace joint firestopping systems so they comply with requirements.

C. Proceed with enclosing joint firestopping systems with other construction only after inspection reports are issued and installations comply with requirements.

3.6 CLEANING AND PROTECTING

A. Clean off excess elastomeric fill materials adjacent to joints as the Work progresses by methods and with cleaning materials that are approved in writing by joint firestopping system manufacturers and that do not damage materials in which joints occur.

B. Provide final protection and maintain conditions during and after installation that ensure joint firestopping systems are without damage or deterioration at time of Substantial Completion. If damage or deterioration occurs despite such protection, cut out and remove damaged or deteriorated fire-resistive joint systems immediately and install new materials to produce fire-resistive joint systems complying with specified requirements.

3.7 JOINT FIRESTOPPING SYSTEM SCHEDULE

A. Where UL-classified systems are indicated, they refer to system numbers in UL's "Fire Resistance Directory" under product Category XHBN or Category XHDG.

END OF SECTION

SECTION 079100

PREFORMED JOINT SEALS

PART 1 - GENERAL

1.1 RELATED DOCUMENTS

A. Drawings and general provisions of the Contract, including General and Supplementary Conditions and Division 01 Specification Sections, apply to this Section.

1.2 SUMMARY

A. Section Includes:

1. Preformed, foam joint seals.
2. Precured, extruded-silicone joint seals.

1.3 ACTION SUBMITTALS

A. Product Data: For each preformed joint seal product.

B. Samples for Initial Selection: Manufacturer's color charts showing the full range of colors available for each product exposed to view.

C. Samples for Verification: For each type and color of preformed joint seal required, provide Samples with joint seals in 1/2-inch-wide joints formed between two 6-inch-long strips of material matching the appearance of exposed surfaces adjacent to joint seals.

D. Preformed Joint Seal Schedule: Include the following information:

1. Joint seal location and designation.
2. Joint width and movement capability.
3. Joint seal manufacturer and product name.
4. Joint seal color.

1.4 INFORMATIONAL SUBMITTALS

A. Product Test Reports: For each preformed joint seal for tests performed by manufacturer and witnessed by a qualified testing agency.

B. Warranties: For special warranties.

1.5 QUALITY ASSURANCE

A. Mockups: Install mockups of assemblies specified in other Sections that are indicated to receive preformed joint seals specified in this Section. Use materials and installation methods specified in this Section.

1.6 WARRANTY

A. Special Warranty: Installer agrees to repair or replace preformed joint seals that do not comply with performance and other requirements specified in this Section within specified warranty period.

1. Warranty Period: Two years from date of Substantial Completion.

B. Special Manufacturer's Warranty: Manufacturer agrees to furnish preformed joint seals to repair or replace those that do not comply with performance and other requirements specified in this Section within specified warranty period.

1. Warranty Period: Five years from date of Substantial Completion.

PART 2 - PRODUCTS

2.1 PREFORMED, FOAM JOINT SEALS

A. Preformed, Foam Joint Seals: Manufacturer's standard joint seal manufactured from urethane or EVA (ethylene vinyl acetate) foam with minimum density of 10 lb/cu. ft. and impregnated with a nondrying, water-repellent agent. Factory produce in precompressed sizes in roll or stick form to fit joint widths based on design criteria indicated, with factory- or field-applied adhesive for bonding to substrates.

1. Manufacturers: Subject to compliance with requirements, available manufacturers offering products that may be incorporated into the Work include, but are not limited to the following:

a. Balco, Inc.
b. Consruction Specialties, Inc.
c. EMSEAL Joint Systems, Ltd.
d. InPro Corporation (IPC).
e. MM Systems Corporation.
f. Nystrom, Inc.

2. Design Criteria:

a. Nominal Joint Width: As indicated on Drawings.

3. Joint Seal Color: As selected by Architect from full range of industry colors.

2.2 EXTRUDED-SILICONE JOINT SEALS

A. Extruded-Silicone Joint Seals: Manufacturer's standard seal consisting of precured low-modulus silicone extrusion, with a neutral-curing silicone sealant for bonding extrusions to substrates.

1. Manufacturers: Subject to compliance with requirements, available manufacturers offering products that may be incorporated into the Work include, but are not limited to the following:

a. Dow Corning Corporation.
b. GE Construction Sealants; Momentive Performance Materials Inc.

c. May National Associates, Inc.; a subsidiary of Sika Corporation.
d. Pecora Corporation.
e. Sealex, Inc.
f. Sika Corporation; Joint Sealants.
g. Tremco Incorporated.

2. Joint Seal Width: Joint size indicated on Drawings plus 1 inch.
3. Joint Seal Color: As selected by Architect from full range of industry colors.

2.3 MISCELLANEOUS MATERIALS

A. Primer: Material recommended by preformed-joint-seal manufacturer for joint substrates indicated.

B. Cleaners for Nonporous Surfaces: Chemical cleaners acceptable to preformed joint seal manufacturer, free of oily residues or other substances capable of staining or harming joint substrates and adjacent nonporous surfaces, and formulated to promote best adhesion to joint substrates.

C. Masking Tape: Nonstaining, nonabsorbent material compatible with preformed joint seals and surfaces adjacent to joints.

PART 3 - EXECUTION

3.1 EXAMINATION

A. Examine joints indicated to receive preformed joint seals, with Installer present, for compliance with requirements for joint configuration, installation tolerances, and other conditions affecting preformed-joint seal performance.

B. Proceed with installation only after unsatisfactory conditions have been corrected.

3.2 PREPARATION

A. Surface Cleaning of Joints: Clean out joints immediately before installing preformed joint seals to comply with preformed joint seal manufacturer's written instructions and the following requirements:

1. Remove all foreign material from joint substrates that could interfere with adhesion of preformed joint seal, including dust, paints (except for permanent protective coatings tested and approved for seal adhesion and compatibility by seal manufacturer), old joint sealants, oil, grease, waterproofing, water repellents, water, surface dirt, and frost.
2. Clean porous joint substrate surfaces by brushing, grinding, mechanical abrading, or a combination of these methods to produce a clean, sound substrate capable of developing optimal bond with preformed joint seals. Remove loose particles remaining after cleaning operations above by vacuuming or blowing out joints with oil-free compressed air. Porous joint substrates include the following:

a. Concrete.
b. Masonry.
c. Exterior insulation and finish systems.

3. Remove laitance and form-release agents from concrete.
4. Clean nonporous joint substrate surfaces with chemical cleaners or other means that do not stain, harm substrates, or leave residues capable of interfering with adhesion of joint seals. Nonporous joint substrates include the following:

    a. Metal.
    b. Glass.

B. Joint Priming: Prime joint substrates where recommended by preformed joint seal manufacturer or as indicated by tests or prior experience. Apply primer to comply with joint seal manufacturer's written instructions. Confine primers to areas of joint seal bond; do not allow spillage or migration onto adjoining surfaces.

C. Masking Tape: Use masking tape where required to prevent contact of adhesive or primer with adjoining surfaces that otherwise would be permanently stained or damaged by such contact or by cleaning methods required to remove smears. Remove tape immediately after tooling without disturbing joint seal.

3.3 INSTALLATION

A. General: Comply with preformed joint seal manufacturer's written installation instructions for products and applications indicated unless more stringent requirements apply.

B. Installation of Preformed, Foam Joint Seals:

1. Install each length of seal immediately after removing protective wrapping.
2. Firmly secure compressed joint seals to joint gap side to obtain full bond using exposed pressure-sensitive adhesive or field-applied adhesive as recommended by manufacturer.
3. Do not pull or stretch material. Produce seal continuity at splices, ends, turns, and intersections of joints.
4. For applications at low ambient temperatures, heat foam joint seal material in compliance with manufacturer's written instructions.

C. Installation of Precured, Extruded-Silicone Joint Seals:

1. Apply masking tape to each side of joint, outside of area to be covered by seal system.
2. Apply silicone sealant to each side of joint to produce a bead of size complying with preformed silicone seal system manufacturer's written instructions and covering a bonding area of not less than 3/8 inch. Hold edge of sealant bead 1/4 inch inside masking tape.
3. Press silicone extrusion into sealant to wet extrusion and substrate. Use a roller to apply consistent pressure and ensure uniform contact with substrate.
4. Complete installation of seal system in horizontal joints before installing in vertical joints. Lap vertical joints over horizontal joints. At ends of joints, cut silicone extrusion with a razor knife.

3.4 PROTECTION

A. Protect preformed joint seals from damage resulting from construction operations or other causes so seals are without deterioration or damage at time of Substantial Completion. If, despite such protection, damage or deterioration occurs, cut out, remove, and repair damaged or deteriorated seals immediately so installations with repaired areas are indistinguishable from original work.

END OF SECTION

SECTION 079200

JOINT SEALANTS

PART 1 - GENERAL

1.1 RELATED DOCUMENTS

A. Drawings and general provisions of the Contract, including General and Supplementary Conditions and Division 01 Specification Sections, apply to this Section.

1.2 SUMMARY

A. Section Includes:

1. Silicone joint sealants for exterior use.
2. Urethane joint sealants for interior use.
3. Latex joint sealants.

1.3 PREINSTALLATION MEETINGS

A. Preinstallation Conference: Conduct conference at Project site.

1.4 ACTION SUBMITTALS

A. Product Data: For each joint-sealant product.

B. Samples for Initial Selection: Manufacturer's color charts consisting of strips of cured sealants showing the full range of colors available for each product exposed to view.

C. Samples for Verification: For each kind and color of joint sealant required, provide Samples with joint sealants in 1/2-inch-wide joints formed between two 6-inch-long strips of material matching the appearance of exposed surfaces adjacent to joint sealants.

D. Joint-Sealant Schedule: Include the following information:

1. Joint-sealant application, joint location, and designation.
2. Joint-sealant manufacturer and product name.
3. Joint-sealant formulation.
4. Joint-sealant color.

1.5 INFORMATIONAL SUBMITTALS

A. Qualification Data: For qualified Installer and testing agency.

B. Product Test Reports: For each kind of joint sealant, for tests performed by manufacturer and witnessed by a qualified testing agency.

C. Preconstruction Field-Adhesion Test Reports: Indicate which sealants and joint preparation methods resulted in optimum adhesion to joint substrates based on testing specified in "Preconstruction Testing" Article.

D. Field-Adhesion Test Reports: For each sealant application tested.

E. Warranties: Sample of special warranties.

1.6 QUALITY ASSURANCE

A. Installer Qualifications: An authorized representative who is trained and approved by manufacturer.

B. Product Testing: Test joint sealants using a qualified testing agency.

1. Testing Agency Qualifications: An independent testing agency qualified according to ASTM C 1021 to conduct the testing indicated.

C. Mockups: Install sealant in mockups of assemblies specified in other Sections that are indicated to receive joint sealants specified in this Section. Use materials and installation methods specified in this Section.

1.7 FIELD CONDITIONS

A. Do not proceed with installation of joint sealants under the following conditions:

1. When ambient and substrate temperature conditions are outside limits permitted by joint-sealant manufacturer.
2. When joint substrates are wet.
3. Where joint widths are less than those allowed by joint-sealant manufacturer for applications indicated.
4. Where contaminants capable of interfering with adhesion have not yet been removed from joint substrates.

1.8 WARRANTY

A. Special Installer's Warranty: Manufacturer's standard form in which Installer agrees to repair or replace joint sealants that do not comply with performance and other requirements specified in this Section within specified warranty period.

1. Warranty Period: Two years from date of Substantial Completion.

B. Special warranties specified in this article exclude deterioration or failure of joint sealants from the following:

1. Movement of the structure caused by structural settlement or errors attributable to design or construction resulting in stresses on the sealant exceeding sealant manufacturer's written specifications for sealant elongation and compression.
2. Disintegration of joint substrates from natural causes exceeding design specifications.
3. Mechanical damage caused by individuals, tools, or other outside agents.
4. Changes in sealant appearance caused by accumulation of dirt or other atmospheric contaminants.

PART 2 - PRODUCTS

2.1 JOINT SEALANTS, GENERAL

A. Compatibility: Provide joint sealants, backings, and other related materials that are compatible with one another and with joint substrates under conditions of service and application, as demonstrated by joint-sealant manufacturer, based on testing and field experience.

B. Colors of Exposed Joint Sealants: As selected by Architect from manufacturer's full range.

2.2 NONSTAINING SILICONE JOINT SEALANTS – General Exterior

A. Nonstaining Joint Sealants: No staining of substrates when tested according to ASTM C 1248.

B. Silicone, Nonstaining, S, NS, 50, NT: Nonstaining, single-component, nonsag, plus 50 percent and minus 50 percent movement capability, nontraffic-use, neutral-curing silicone joint sealant; ASTM C 920, Type S, Grade NS, Class 50, Use NT.

1. Manufacturers: Subject to compliance with requirements, available manufacturers offering products that may be incorporated into the Work include, but are not limited to the following:

a. Dow Corning Corporation.
b. GE Construction Sealants; Momentive Performance Materials Inc.
c. Pecora Corporation.
d. Sika Corporation; Joint Sealants.
e. Tremco Incorporated.

2.3 URETHANE JOINT SEALANTS – General Interior

A. Urethane, Immersible, S, NS, 25, T, NT, I: Immersible, single-component, nonsag, plus 25 percent and minus 25 percent movement capability, traffic- and nontraffic-use, urethane joint sealant; ASTM C 920, Type S, Grade NS, Class 25, Uses T, NT, and I.

1. Manufacturers: Subject to compliance with requirements, available manufacturers offering products that may be incorporated into the Work include, but are not limited to the following:

a. BASF Corp. - Construction Chemicals.
b. Pecora Corporation.
c. Tremco Incorporated.

2.4 LATEX JOINT SEALANTS – General Interior

A. Acrylic Latex: Acrylic latex or siliconized acrylic latex, ASTM C 834, Type OP, Grade NF.

1. Manufacturers: Subject to compliance with requirements, available manufacturers offering products that may be incorporated into the Work include, but are not limited to the following:

a. Pecora Corporation.

b. Sherwin-Williams Company (The).
c. Tremco Incorporated.

2.5 JOINT SEALANT BACKING

A. Sealant Backing Material, General: Nonstaining; compatible with joint substrates, sealants, primers, and other joint fillers; and approved for applications indicated by sealant manufacturer based on field experience and laboratory testing.

1. Manufacturers: Subject to compliance with requirements, available manufacturers offering products that may be incorporated into the Work include, but are not limited to the following:

a. Adfast.
b. Alcot Plastics Ltd.
c. BASF Corp. - Construction Chemicals.
d. Construction Foam Products; a division of Nomaco, Inc.

B. Cylindrical Sealant Backings: ASTM C 1330, Type C (closed-cell material with a surface skin), Type O (open-cell material), Type B (bicellular material with a surface skin), or any of the preceding types, as approved in writing by joint-sealant manufacturer for joint application indicated, and of size and density to control sealant depth and otherwise contribute to producing optimum sealant performance.

C. Bond-Breaker Tape: Polyethylene tape or other plastic tape recommended by sealant manufacturer for preventing sealant from adhering to rigid, inflexible joint-filler materials or joint surfaces at back of joint. Provide self-adhesive tape where applicable.

2.6 MISCELLANEOUS MATERIALS

A. Primer: Material recommended by joint-sealant manufacturer where required for adhesion of sealant to joint substrates indicated, as determined from preconstruction joint-sealant-substrate tests and field tests.

B. Cleaners for Nonporous Surfaces: Chemical cleaners acceptable to manufacturers of sealants and sealant backing materials, free of oily residues or other substances capable of staining or harming joint substrates and adjacent nonporous surfaces in any way, and formulated to promote optimum adhesion of sealants to joint substrates.

C. Masking Tape: Nonstaining, nonabsorbent material compatible with joint sealants and surfaces adjacent to joints.

PART 3 - EXECUTION

3.1 EXAMINATION

A. Examine joints indicated to receive joint sealants, with Installer present, for compliance with requirements for joint configuration, installation tolerances, and other conditions affecting performance of the Work.

B. Proceed with installation only after unsatisfactory conditions have been corrected.

3.2 PREPARATION

A. Surface Cleaning of Joints: Clean out joints immediately before installing joint sealants to comply with joint-sealant manufacturer's written instructions and the following requirements:

1. Remove all foreign material from joint substrates that could interfere with adhesion of joint sealant, including dust, paints (except for permanent, protective coatings tested and approved for sealant adhesion and compatibility by sealant manufacturer), old joint sealants, oil, grease, waterproofing, water repellents, water, surface dirt, and frost.
2. Clean porous joint substrate surfaces by brushing, grinding, mechanical abrading, or a combination of these methods to produce a clean, sound substrate capable of developing optimum bond with joint sealants. Remove loose particles remaining after cleaning operations above by vacuuming or blowing out joints with oil-free compressed air. Porous joint substrates include the following:

    a. Concrete.
    b. Masonry.
    c. Unglazed surfaces of ceramic tile.

3. Remove laitance and form-release agents from concrete.
4. Clean nonporous joint substrate surfaces with chemical cleaners or other means that do not stain, harm substrates, or leave residues capable of interfering with adhesion of joint sealants. Nonporous joint substrates include the following:

    a. Metal.
    b. Glass.
    c. Glazed surfaces of ceramic tile.

B. Joint Priming: Prime joint substrates where recommended by joint-sealant manufacturer or as indicated by preconstruction joint-sealant-substrate tests or prior experience. Apply primer to comply with joint-sealant manufacturer's written instructions. Confine primers to areas of joint-sealant bond; do not allow spillage or migration onto adjoining surfaces.

C. Masking Tape: Use masking tape where required to prevent contact of sealant or primer with adjoining surfaces that otherwise would be permanently stained or damaged by such contact or by cleaning methods required to remove sealant smears. Remove tape immediately after tooling without disturbing joint seal.

3.3 INSTALLATION OF JOINT SEALANTS

A. General: Comply with joint-sealant manufacturer's written installation instructions for products and applications indicated, unless more stringent requirements apply.

B. Sealant Installation Standard: Comply with recommendations in ASTM C 1193 for use of joint sealants as applicable to materials, applications, and conditions indicated.

C. Install sealant backings of kind indicated to support sealants during application and at position required to produce cross-sectional shapes and depths of installed sealants relative to joint widths that allow optimum sealant movement capability.

1. Do not leave gaps between ends of sealant backings.
2. Do not stretch, twist, puncture, or tear sealant backings.
3. Remove absorbent sealant backings that have become wet before sealant application and replace them with dry materials.

D. Install bond-breaker tape behind sealants where sealant backings are not used between sealants and backs of joints.

E. Install sealants using proven techniques that comply with the following and at the same time backings are installed:

1. Place sealants so they directly contact and fully wet joint substrates.
2. Completely fill recesses in each joint configuration.
3. Produce uniform, cross-sectional shapes and depths relative to joint widths that allow optimum sealant movement capability.

F. Tooling of Nonsag Sealants: Immediately after sealant application and before skinning or curing begins, tool sealants according to requirements specified in subparagraphs below to form smooth, uniform beads of configuration indicated; to eliminate air pockets; and to ensure contact and adhesion of sealant with sides of joint.

1. Remove excess sealant from surfaces adjacent to joints.
2. Use tooling agents that are approved in writing by sealant manufacturer and that do not discolor sealants or adjacent surfaces.
3. Provide concave joint profile per Figure 8A in ASTM C 1193, unless otherwise indicated.

a. Use masking tape to protect surfaces adjacent to recessed tooled joints.

3.4 FIELD QUALITY CONTROL

A. Field-Adhesion Testing: Field test joint-sealant adhesion to joint substrates as follows:

1. Extent of Testing: Test completed and cured sealant joints as follows:

a. Perform 10 tests for the first 1000 feet of joint length for each kind of sealant and joint substrate.

2. Test Method: Test joint sealants according to Method A, Field-Applied Sealant Joint Hand Pull Tab, in Appendix X1 in ASTM C 1193 or Method A, Tail Procedure, in ASTM C 1521.

a. For joints with dissimilar substrates, verify adhesion to each substrate separately; extend cut along one side, verifying adhesion to opposite side. Repeat procedure for opposite side.

3. Inspect tested joints and report on the following:

a. Whether sealants filled joint cavities and are free of voids.
b. Whether sealant dimensions and configurations comply with specified requirements.
c. Whether sealants in joints connected to pulled-out portion failed to adhere to joint substrates or tore cohesively. Include data on pull distance used to test each kind of product and joint substrate. Compare these results to determine if adhesion passes sealant manufacturer's field-adhesion hand-pull test criteria.

4. Record test results in a field-adhesion-test log. Include dates when sealants were installed, names of persons who installed sealants, test dates, test locations, whether joints were primed, adhesion results and percent elongations, sealant fill, sealant configuration, and sealant dimensions.

5. Repair sealants pulled from test area by applying new sealants following same procedures used originally to seal joints. Ensure that original sealant surfaces are clean and that new sealant contacts original sealant.

B. Evaluation of Field-Adhesion Test Results: Sealants not evidencing adhesive failure from testing or noncompliance with other indicated requirements will be considered satisfactory. Remove sealants that fail to adhere to joint substrates during testing or to comply with other requirements. Retest failed applications until test results prove sealants comply with indicated requirements.

3.5 CLEANING

A. Clean off excess sealant or sealant smears adjacent to joints as the Work progresses by methods and with cleaning materials approved in writing by manufacturers of joint sealants and of products in which joints occur.

3.6 PROTECTION

A. Protect joint sealants during and after curing period from contact with contaminating substances and from damage resulting from construction operations or other causes so sealants are without deterioration or damage at time of Substantial Completion. If, despite such protection, damage or deterioration occurs, cut out and remove damaged or deteriorated joint sealants immediately so installations with repaired areas are indistinguishable from original work.

END OF SECTION

SECTION 079513.13

INTERIOR EXPANSION JOINT COVER ASSEMBLIES

PART 1 - GENERAL

1.1 RELATED DOCUMENTS

A. Drawings and general provisions of the Contract, including General and Supplementary Conditions and Division 01 Specification Sections, apply to this Section.

1.2 SUMMARY

A. Section includes interior expansion joint cover assemblies.

1.3 ACTION SUBMITTALS

A. Product Data: For each type of product.

1. Include construction details, material descriptions, dimensions of individual components and profiles, and finishes for expansion joint cover assemblies.

B. Shop Drawings: For each expansion joint cover assembly.

1. Include plans, elevations, sections, details, splices, block-out requirement, attachments to other work, and line diagrams showing entire route of each expansion joint.
2. Where expansion joint cover assemblies change planes, provide isometric or clearly detailed drawing depicting how components interconnect.

C. Samples for Initial Selection: For each type of exposed finish.

1. Include manufacturer's color charts showing the full range of colors and finishes available for each exposed metal and elastomeric-seal material.

D. Samples for Verification: For each type of expansion joint cover assembly, full width by 6 inches long in size.

E. Expansion Joint Cover Assembly Schedule: Prepared by or under the supervision of the supplier. Include the following information in tabular form:

1. Manufacturer and model number for each expansion joint cover assembly.
2. Expansion joint cover assembly location cross-referenced to Drawings.
3. Nominal, minimum, and maximum joint width.
4. Movement direction.
5. Materials, colors, and finishes.
6. Product options.
7. Fire-resistance ratings.

1.4 INFORMATIONAL SUBMITTALS

A. Product Test Reports: For each fire-resistance-rated expansion joint cover assembly, for tests performed by manufacturer and witnessed by a qualified testing agency.

1.5 QUALITY ASSURANCE

A. Mockups: Build mockups to demonstrate aesthetic effects and to set quality standards for materials and execution.

1. Build mockup of typical expansion joint cover assembly as shown on Drawings.
2. Approval of mockups does not constitute approval of deviations from the Contract Documents contained in mockups unless Architect specifically approves such deviations in writing.

PART 2 - PRODUCTS

2.1 ASSEMBLY DESCRIPTION

A. Furnish units in longest practicable lengths to minimize field splicing.

B. Include factory-fabricated closure materials and transition pieces, T-joints, corners, curbs, cross-connections, and other accessories as required to provide continuous expansion joint cover assemblies.

2.2 PERFORMANCE REQUIREMENTS

A. Seismic Performance: Expansion joint cover assemblies shall withstand the effects of earthquake motions determined according to ASCE/SEI 7.

B. Fire-Resistance Ratings: Provide expansion joint cover assemblies with fire barriers identical to those of systems tested for fire resistance according to UL 2079 or ASTM E 1966 by a qualified testing agency.

1. Hose Stream Test: Wall-to-wall and wall-to-ceiling assemblies shall be subjected to hose stream testing.

C. Expansion Joint Design Criteria:

1. Type of Movement: Thermal and Wind sway.

a. Nominal Joint Width: As indicated on Drawings.
b. Minimum Joint Width: As indicated on Drawings.
c. Maximum Joint Width: As indicated on Drawings.

2. Type of Movement: Seismic.

a. Joint Movement: As indicated on Drawings.

2.3 MANUFACTURERS

A. Basis of Design Product Subject to compliance with requirements, provide products indicated to, the following:

1. Balco, Inc.
2. Construction Specialties, Inc.
3. InPro Corporation (IPC).
4. MM Systems Corporation.
5. Nystrom, Inc.

2.4 FLOOR EXPANSION JOINT COVERS

A. Elastomeric-Seal Floor Joint Cover: Assembly consisting of elastomeric seal anchored to frames fixed to sides of joint gap.

1. Basis of Design Product: Construction Specialties; GFT-200.
2. Application: Floor to floor.
3. Installation: Recessed.
4. Load Capacity: As indicated on Drawings.
5. Fire-Resistance Rating: Not less than that indicated on Drawings.
6. Seal: Preformed elastomeric membrane or extrusion.

a. Color: As selected by Architect from manufacturer's full range.

B. Elastomeric-Seal Floor Joint Cover: Assembly consisting of elastomeric seal anchored to frames fixed to sides of joint gap.

1. Basis of Design Product: Construction Specialties; GFTW-200.
2. Application: Floor to wall.
3. Installation: Recessed.
4. Load Capacity: As indicated on Drawings.
5. Fire-Resistance Rating: Not less than that indicated on Drawings.
6. Seal: Preformed elastomeric membrane or extrusion.

a. Color: As selected by Architect from manufacturer's full range.

2.5 WALL EXPANSION JOINT COVERS

A. Metal-Plate Wall Joint Cover: Metal cover plate fixed on one side of joint gap and free to slide on other.

1. Basis of Design Product: Construction Specialties; ASM-200.
2. Application: Wall to wall.
3. Fire-Resistance Rating: Not less than that indicated on Drawings.
4. Exposed Metal:

a. Aluminum: Mill.

B. Metal-Plate Wall Joint Cover: Metal cover plate fixed on one side of joint gap and free to slide on other.

1. Basis of Design Product: Construction Specialties; ASMC-200.

2. Application: Wall to corner.
3. Fire-Resistance Rating: Not less than that indicated on Drawings.
4. Exposed Metal:

    a. Aluminum: Mill.

2.6 CEILING EXPANSION JOINT COVERS

A. Elastomeric-Seal Acoustical Ceiling Joint Cover: Elastomeric-seal assembly designed for use in acoustical ceilings.

1. Basis of Design Product: Construction Specialties; HC-200.
2. Application: Ceiling to ceiling.
3. Fire-Resistance Rating: Not less than that indicated on Drawings.
4. Seal: Preformed elastomeric membranes or extrusions.

    a. Color: White.

B. Elastomeric-Seal Acoustical Ceiling Joint Cover: Elastomeric-seal assembly designed for use in acoustical ceilings.

1. Basis of Design Product: Construction Specialties; HCW-200.
2. Application: Ceiling to Wall.
3. Fire-Resistance Rating: Not less than that indicated on Drawings.
4. Seal: Preformed elastomeric membranes or extrusions.

    a. Color: White.

2.7 MATERIALS

A. Aluminum: ASTM B 221, Alloy 6063-T5 for extrusions; ASTM B 209, Alloy 6061-T6 for sheet and plate.

1. Apply manufacturer's standard protective coating on aluminum surfaces to be placed in contact with cementitious materials.

B. Elastomeric Seals: Manufacturer's standard preformed elastomeric membranes or extrusions to be installed in metal frames.

C. Fire Barriers: Any material or material combination, when fire tested after cycling, designated to resist the passage of flame and hot gases through a movement joint and to comply with performance criteria for required fire-resistance rating.

1. Basis of Design Product: Subject to compliance with requirements, provide the following:

    a. Construction Specialties; Model RFX Fire Barrier.

D. Moisture Barrier: Manufacturer's standard, flexible elastomeric material.

E. Nonmetallic, Shrinkage-Resistant Grout: ASTM C 1107/C 1107M, factory-packaged, nonmetallic aggregate grout, noncorrosive, nonstaining, mixed with water to consistency suitable for application and a 30-minute working time.

2.8 ALUMINUM FINISHES

A. Mill finish.

2.9 ACCESSORIES

A. Moisture Barriers: Manufacturer's standard continuous, waterproof membrane within joint and attached to substrate on sides of joint.

1. Provide at toilet rooms and janitor closet.

B. Manufacturer's standard attachment devices. Include anchors, clips, fasteners, set screws, spacers, and other accessories compatible with material in contact, as indicated or required for complete installations.

PART 3 - EXECUTION

3.1 EXAMINATION

A. Examine surfaces where expansion joint cover assemblies will be installed for installation tolerances and other conditions affecting performance of the Work.

B. Notify Architect where discrepancies occur that will affect proper expansion joint cover assembly installation and performance.

C. Proceed with installation only after unsatisfactory conditions have been corrected.

3.2 PREPARATION

A. Prepare substrates according to expansion joint cover assembly manufacturer's written instructions.

B. Coordinate and furnish anchorages, setting drawings, and instructions for installing expansion joint cover assemblies. Provide fasteners of metal, type, and size to suit type of construction indicated and to provide for secure attachment of expansion joint cover assemblies.

3.3 INSTALLATION

A. Comply with manufacturer's written instructions for storing, handling, and installing expansion joint cover assemblies and materials unless more stringent requirements are indicated.

B. Metal Frames: Perform cutting, drilling, and fitting required to install expansion joint cover assemblies.

1. Repair or grout block out as required for continuous frame support using nonmetallic, shrinkage-resistant grout.
2. Install frames in continuous contact with adjacent surfaces.

a. Shimming is not permitted.

3. Install in true alignment and proper relationship to joints and adjoining finished surfaces measured from established lines and levels.
4. Adjust for differences between actual structural gap and nominal design gap due to ambient temperature at time of installation.
5. Cut and fit ends to accommodate thermal expansion and contraction of metal without buckling of frames.
6. Locate anchors at interval recommended by manufacturer, but not less than 3 inches from each end and not more than 24 inches o.c.

C. Seals: Install elastomeric seals and membranes in frames to comply with manufacturer's written instructions. Install with minimum number of end joints.

1. Provide in continuous lengths for straight sections.
2. Seal transitions. Vulcanize or heat-weld field-spliced joints as recommended by manufacturer.
3. Installation: Mechanically lock seals into frames or adhere to frames with adhesive or pressure-sensitive tape as recommended by manufacturer.

D. Install with hairline mitered corners where expansion joint cover assemblies change direction or abut other materials.

E. Terminate exposed ends of expansion joint cover assemblies with field- or factory-fabricated termination devices.

F. Fire-Resistance-Rated Assemblies: Coordinate installation of expansion joint cover assembly materials and associated work so complete assemblies comply with performance requirements.

1. Fire Barriers: Install fire barriers to provide continuous, uninterrupted fire resistance throughout length of joint, including transitions and field splices.

G. Moisture Barrier Drainage: If indicated, provide drainage fittings and connect to drains.

3.4 PROTECTION

A. Do not remove protective covering until finish work in adjacent areas is complete. When protective covering is removed, clean exposed metal surfaces to comply with manufacturer's written instructions.

B. Protect the installation from damage by work of other Sections. Where necessary due to heavy construction traffic, remove and properly store cover plates or seals and install temporary protection over expansion joint cover assemblies. Reinstall cover plates or seals prior to Substantial Completion.

END OF SECTION

SECTION 081113

HOLLOW METAL DOORS AND FRAMES

PART 1 - GENERAL

1.1 RELATED DOCUMENTS

A. Drawings and general provisions of the Contract, including General and Supplementary Conditions and Division 01 Specification Sections, apply to this Section.

1.2 SUMMARY

A. Section includes:

1. Interior standard steel doors and frames.

B. Minimum Thickness: Minimum thickness of base metal without coatings according to NAAMM-HMMA 803 or SDI A250.8.

1.3 COORDINATION

A. Coordinate anchorage installation for hollow-metal frames. Furnish setting drawings, templates, and directions for installing anchorages, including sleeves, concrete inserts, anchor bolts, and items with integral anchors. Deliver such items to Project site in time for installation.

B. Coordinate requirements for installation of door hardware, electrified door hardware, and access control and security systems.

1.4 PREINSTALLATION MEETINGS

A. Preinstallation Conference: Conduct conference at Project site.

1.5 ACTION SUBMITTALS

A. Product Data: For each type of product.

1. Include construction details, material descriptions, core descriptions, fire-resistance ratings, and finishes.

B. Shop Drawings: Include the following:

1. Elevations of each door design.
2. Details of doors, including vertical and horizontal edge details and metal thicknesses.
3. Frame details for each frame type, including dimensioned profiles and metal thicknesses.
4. Locations of reinforcement and preparations for hardware.
5. Details of each different wall opening condition.
6. Details of anchorages, joints, field splices, and connections.

7. Details of accessories.
8. Details of moldings, removable stops, and glazing.
9. Details of conduit and preparations for power, signal, and control systems.

C. Samples for Verification:

1. For each type of exposed finish required, prepared on Samples of not less than 3 by 5 inches.
2. For the following items, prepared on Samples about 12 by 12 inches to demonstrate compliance with requirements for quality of materials and construction:

a. Doors: Show vertical-edge, top, and bottom construction; core construction; and hinge and other applied hardware reinforcement. Include separate section showing glazing if applicable.
b. Frames: Show profile, corner joint, floor and wall anchors, and silencers. Include separate section showing fixed hollow metal panels and glazing if applicable.

D. Product Schedule: For hollow-metal doors and frames, prepared by or under the supervision of supplier, using same reference numbers for details and openings as those on Drawings. Coordinate with final door hardware schedule.

1.6 INFORMATIONAL SUBMITTALS

A. Product Test Reports: For each type of hollow-metal door and frame assembly, for tests performed by a qualified testing agency.

1.7 DELIVERY, STORAGE, AND HANDLING

A. Deliver hollow-metal doors and frames palletized, packaged, or crated to provide protection during transit and Project-site storage. Do not use nonvented plastic.

1. Provide additional protection to prevent damage to factory-finished units.

B. Deliver welded frames with two removable spreader bars across bottom of frames, tack welded to jambs and mullions.

C. Store hollow-metal doors and frames vertically under cover at Project site with head up. Place on minimum 4-inch-high wood blocking. Provide minimum 1/4-inch space between each stacked door to permit air circulation.

PART 2 - PRODUCTS

2.1 MANUFACTURERS

A. Manufacturers: Subject to compliance with requirements, available manufacturers offering products that may be incorporated into the Work include, but are not limited to, the following:

1. Ceco Door Products.
2. Curries Co.
3. MegaMet Industries.
4. Mesker Door Inc.

5. Pioneer Industries, Inc.
6. Steelcraft; an Allegion brand.

2.2 PERFORMANCE REQUIREMENTS

A. Fire-Rated Assemblies: Complying with NFPA 80 and listed and labeled by a qualified testing agency acceptable to authorities having jurisdiction for fire-protection ratings indicated, based on testing at positive pressure according to NFPA 252 or UL 10C.

B. Fire-Rated, Borrowed-Lite Assemblies: Complying with NFPA 80 and listed and labeled by a qualified testing agency acceptable to authorities having jurisdiction, for fire-protection ratings indicated, based on testing according to NFPA 257 or UL 9.

2.3 INTERIOR STANDARD STEEL DOORS AND FRAMES

A. Construct hollow-metal doors and frames to comply with standards indicated for materials, fabrication, hardware locations, hardware reinforcement, tolerances, and clearances, and as specified.

B. Extra-Heavy-Duty Doors and Frames: SDI A250.8, Level 3; SDI A250.4, Level A. At locations indicated in the Door and Frame Schedule.

1. Doors:

   a. Type: As indicated in the Door and Frame Schedule.
   b. Thickness: 1-3/4 inches.
   c. Face: Metallic-coated steel sheet, minimum thickness of 0.053 inch.
   d. Edge Construction: Model 2, Seamless.
   e. Edge Bevel: Provide manufacturer's standard beveled or square edges.
   f. Core: Manufacturer's standard.
   g. Fire-Rated Core: Manufacturer's standard core for fire-rated doors.

2. Frames:

   a. Materials: Metallic-coated steel sheet, minimum thickness of 0.067 inch.
   b. Sidelite and Transom Frames: Fabricated from same thickness material as adjacent door frame.
   c. Construction: Full profile welded.

3. Exposed Finish: Prime.

2.4 BORROWED LITES

A. Fabricate of metallic-coated steel sheet, minimum thickness of 0.067 inch.

B. Construction: Full profile welded.

C. Fabricate in one piece except where handling and shipping limitations require multiple sections. Where frames are fabricated in sections due to shipping or handling limitations, provide alignment plates or angles at each joint, fabricated of metal of same or greater thickness as metal as frames.

D. Provide countersunk, flat- or oval-head exposed screws and bolts for exposed fasteners unless otherwise indicated.

2.5 FRAME ANCHORS

A. Jamb Anchors:

1. Type: Anchors of minimum size and type required by applicable door and frame standard, and suitable for performance level indicated.
2. Quantity: Minimum of three anchors per jamb, with one additional anchor for frames with no floor anchor. Provide one additional anchor for each 24 inches of frame height above 7 feet.
3. Postinstalled Expansion Anchor: Minimum 3/8-inch-diameter bolts with expansion shields or inserts, with manufacturer's standard pipe spacer.

B. Floor Anchors: Provide floor anchors for each jamb and mullion that extends to floor.

C. Floor Anchors for Concrete Slabs with Underlayment: Adjustable-type anchors with extension clips, allowing not less than 2-inch height adjustment. Terminate bottom of frames at top of underlayment.

D. Material: ASTM A 879/A 879M, Commercial Steel (CS), 04Z coating designation; mill phosphatized.

1. For anchors built into exterior walls, steel sheet complying with ASTM A 1008/A 1008M or ASTM A 1011/A 1011M; hot-dip galvanized according to ASTM A 153/A 153M, Class B.

2.6 MATERIALS

A. Cold-Rolled Steel Sheet: ASTM A 1008/A 1008M, Commercial Steel (CS), Type B; suitable for exposed applications.

B. Hot-Rolled Steel Sheet: ASTM A 1011/A 1011M, Commercial Steel (CS), Type B; free of scale, pitting, or surface defects; pickled and oiled.

C. Metallic-Coated Steel Sheet: ASTM A 653/A 653M, Commercial Steel (CS), Type B; with minimum G60 metallic coating.

D. Inserts, Bolts, and Fasteners: Hot-dip galvanized according to ASTM A 153/A 153M.

E. Power-Actuated Fasteners in Concrete: Fastener system of type suitable for application indicated, fabricated from corrosion-resistant materials, with clips or other accessory devices for attaching hollow-metal frames of type indicated.

F. Glazing: Comply with requirements in Section 088000 "Glazing."

2.7 FABRICATION

A. Door Astragals: Provide overlapping astragal on one leaf of pairs of doors where required by NFPA 80 for fire-performance rating or where indicated. Extend minimum 3/4 inch beyond edge

of door on which astragal is mounted or as required to comply with published listing of qualified testing agency.

B. Hollow-Metal Frames: Fabricate in one piece except where handling and shipping limitations require multiple sections. Where frames are fabricated in sections, provide alignment plates or angles at each joint, fabricated of metal of same or greater thickness as frames.

1. Sidelite and Transom Bar Frames: Provide closed tubular members with no visible face seams or joints, fabricated from same material as door frame. Fasten members at crossings and to jambs by welding, or by rigid mechanical anchors.
2. Provide countersunk, flat- or oval-head exposed screws and bolts for exposed fasteners unless otherwise indicated.
3. Door Silencers: Except on weather-stripped frames, drill stops to receive door silencers as follows. Keep holes clear during construction.

a. Single-Door Frames: Drill stop in strike jamb to receive three door silencers.
b. Double-Door Frames: Drill stop in head jamb to receive two door silencers.

C. Hardware Preparation: Factory prepare hollow-metal doors and frames to receive templated mortised hardware, and electrical wiring; include cutouts, reinforcement, mortising, drilling, and tapping according to SDI A250.6, the Door Hardware Schedule, and templates.

1. Reinforce doors and frames to receive nontemplated, mortised, and surface-mounted door hardware.
2. Comply with BHMA A156.115 for preparing hollow-metal doors and frames for hardware.

D. Glazed Lites: Provide stops and moldings around glazed lites where indicated. Form corners of stops and moldings with butted or mitered hairline joints.

1. Provide stops and moldings flush with face of door, and with square stops unless otherwise indicated.
2. Multiple Glazed Lites: Provide fixed and removable stops and moldings so that each glazed lite is capable of being removed independently.
3. Provide fixed frame moldings on outside of exterior and on secure side of interior doors and frames. Provide loose stops and moldings on inside of hollow-metal doors and frames.
4. Coordinate rabbet width between fixed and removable stops with glazing and installation types indicated.
5. Provide stops for installation with countersunk flat- or oval-head machine screws spaced uniformly not more than 9 inches o.c. and not more than 2 inches o.c. from each corner.

2.8 STEEL FINISHES

A. Prime Finish: Clean, pretreat, and apply manufacturer's standard primer.

1. Shop Primer: Manufacturer's standard, fast-curing, lead- and chromate-free primer complying with SDI A250.10; recommended by primer manufacturer for substrate; compatible with substrate and field-applied coatings despite prolonged exposure.

PART 3 - EXECUTION

3.1 PREPARATION

A. Remove welded-in shipping spreaders installed at factory. Restore exposed finish by grinding, filling, and dressing, as required to make repaired area smooth, flush, and invisible on exposed faces. Touch up factory-applied finishes where spreaders are removed.

B. Drill and tap doors and frames to receive nontemplated, mortised, and surface-mounted door hardware.

3.2 INSTALLATION

A. General: Install hollow-metal doors and frames plumb, rigid, properly aligned, and securely fastened in place. Comply with approved Shop Drawings and with manufacturer's written instructions.

B. Hollow-Metal Frames: Comply with SDI A250.11.

1. Set frames accurately in position; plumbed, aligned, and braced securely until permanent anchors are set. After wall construction is complete, remove temporary braces without damage to completed Work.

    a. Where frames are fabricated in sections, field splice at approved locations by welding face joint continuously; grind, fill, dress, and make splice smooth, flush, and invisible on exposed faces. Touch-up finishes.
    b. Install frames with removable stops located on secure side of opening.

2. Fire-Rated Openings: Install frames according to NFPA 80.
3. Floor Anchors: Secure with postinstalled expansion anchors.

    a. Floor anchors may be set with power-actuated fasteners instead of postinstalled expansion anchors if so indicated and approved on Shop Drawings.

4. Masonry Walls: Coordinate installation of frames to allow for solidly filling space between frames and masonry with grout or mortar.
5. Installation Tolerances: Adjust hollow-metal frames to the following tolerances:

    a. Squareness: Plus or minus 1/16 inch, measured at door rabbet on a line 90 degrees from jamb perpendicular to frame head.
    b. Alignment: Plus or minus 1/16 inch, measured at jambs on a horizontal line parallel to plane of wall.
    c. Twist: Plus or minus 1/16 inch, measured at opposite face corners of jambs on parallel lines, and perpendicular to plane of wall.
    d. Plumbness: Plus or minus 1/16 inch, measured at jambs at floor.

C. Hollow-Metal Doors: Fit and adjust hollow-metal doors accurately in frames, within clearances specified below.

1. Non-Fire-Rated Steel Doors: Comply with SDI A250.8.
2. Fire-Rated Doors: Install doors with clearances according to NFPA 80.

D. Glazing: Comply with installation requirements in Section 088000 "Glazing" and with hollow-metal manufacturer's written instructions.

3.3 CLEANING AND TOUCHUP

A. Prime-Coat Touchup: Immediately after erection, sand smooth rusted or damaged areas of prime coat and apply touchup of compatible air-drying, rust-inhibitive primer.

B. Metallic-Coated Surface Touchup: Clean abraded areas and repair with galvanizing repair paint according to manufacturer's written instructions.

C. Touchup Painting: Cleaning and touchup painting of abraded areas of paint are specified in painting Sections.

END OF SECTION

SECTION 081416

FLUSH WOOD DOORS

PART 1 - GENERAL

1.1 RELATED DOCUMENTS

A. Drawings and general provisions of the Contract, including General and Supplementary Conditions and Division 01 Specification Sections, apply to this Section.

1.2 SUMMARY

A. Section Includes:

1. Solid-core doors with wood-veneer faces.
2. Shop finishing flush wood doors.

1.3 PREINSTALLATION MEETINGS

A. Preinstallation Conference: Conduct conference at Project site.

1.4 ACTION SUBMITTALS

A. Product Data: For each type of door indicated. Include details of core and edge construction and trim for openings. Include factory-finishing specifications.

B. Shop Drawings: Indicate location, size, and hand of each door; elevation of each kind of door; construction details not covered in Product Data; location and extent of hardware blocking; and other pertinent data.

1. Indicate dimensions and locations of mortises and holes for hardware.
2. Indicate dimensions and locations of cutouts.
3. Indicate requirements for veneer matching.
4. Indicate doors to be factory finished and finish requirements.
5. Indicate fire-protection ratings for fire-rated doors.

C. Samples for Initial Selection: For factory-finished doors.

D. Samples for Verification:

1. Factory finishes applied to actual door face materials, approximately 8 by 10 inches, for each material and finish. For each wood species and transparent finish, provide set of three samples showing typical range of color and grain to be expected in the finished work.
2. Corner sections of doors, approximately 8 by 10 inches, with door faces and edges representing actual materials to be used.

a. Finish veneer-faced door samples with same materials proposed for factory-finished doors.

E. Warranty: Sample of special warranty.

1.5 QUALITY ASSURANCE

A. Manufacturer Qualifications: A qualified manufacturer that is certified for chain of custody by an FSC-accredited certification body.

B. Quality Standard: In addition to requirements specified, comply with AWI's "Architectural Woodwork Quality Standards Illustrated."

1. Provide AWI Quality Certification Labels or an AWI letter of licensing for Project indicating that doors comply with requirements of grades specified.

1.6 DELIVERY, STORAGE, AND HANDLING

A. Comply with requirements of referenced standard and manufacturer's written instructions.

B. Package doors individually in plastic bags or cardboard cartons.

C. Mark each door on top and bottom rail with opening number used on Shop Drawings.

1.7 FIELD CONDITIONS

A. Environmental Limitations: Do not deliver or install doors until spaces are enclosed and weathertight, wet work in spaces is complete and dry, and HVAC system is operating and maintaining temperature between 60 and 90 deg F and relative humidity between 43 and 70 percent during the remainder of the construction period.

1.8 WARRANTY

A. Special Warranty: Manufacturer's standard form in which manufacturer agrees to repair or replace doors that fail in materials or workmanship within specified warranty period.

1. Failures include, but are not limited to, the following:

a. Warping (bow, cup, or twist) more than 1/4 inch in a 42-by-84-inch section.
b. Telegraphing of core construction in face veneers exceeding 0.01 inch in a 3-inch span.

2. Warranty shall also include installation and finishing that may be required due to repair or replacement of defective doors.
3. Warranty Period for Solid-Core Interior Doors: Life of installation.

PART 2 - PRODUCTS

2.1 MANUFACTURERS

A. Manufacturers: Subject to compliance with requirements, available manufacturers offering products that may be incorporated into the Work include, but are not limited to, the following:

1. Eggers Industries.
2. Graham; an Assa Abloy Group company.
3. Marshfield -Algoma.
4. Mohawk Flush Doors, Inc.; a Masonite company.
5. VT Industries Inc.

2.2 FLUSH WOOD DOORS, GENERAL

A. Quality Standard: In addition to requirements specified, comply with AWI's, AWMAC's, and WI's "Architectural Woodwork Standards or WDMA I.S.1-A, "Architectural Wood Flush Doors."

1. Provide AWI Quality Certification Labels indicating that doors comply with requirements of grades specified.

2.3 DOOR CONSTRUCTION, GENERAL

A. WDMA I.S.1-A Performance Grade: Heavy Duty.

B. Particleboard-Core Doors:

1. Particleboard: ANSI A208.1, Grade LD-2.
2. Provide doors with glued-wood-stave or structural-composite-lumber cores instead of particleboard cores for doors indicated to receive exit devices.

2.4 VENEERED-FACED DOORS FOR TRANSPARENT FINISH

A. Interior Solid-Core Doors:

1. Grade: Premium, with Grade A faces.
2. Species:
   a. Stage Storage Doors: Maple.
   b. All other Doors: Red oak.
3. Cut: Plain sliced.
4. Match between Veneer Leaves: Book match.
5. Assembly of Veneer Leaves on Door Faces: Center-balance match.
6. Pair and Set Match: Provide for doors hung in same opening.
7. Room Match: Provide door faces of compatible color and grain within each separate room or area of building.
8. Exposed Vertical and Top Edges: Same species as faces.
9. Core: Particleboard.
10. Construction: Five plies. Stiles and rails are bonded to core, then entire unit abrasive planed before veneering.
11. Headraill: Total blocking & head rail not less than 7 inches by door width.

2.5 LIGHT FRAMES AND LOUVERS

A. Wood Beads for Light Openings in Wood Doors: Provide manufacturer's standard wood beads unless otherwise indicated.

1. Wood Species: Same species as door faces.
2. Profile: Manufacturer's standard shape.

2.6 FABRICATION

A. Factory fit doors to suit frame-opening sizes indicated. Comply with clearance requirements of referenced quality standard for fitting unless otherwise indicated.

B. Factory machine doors for hardware that is not surface applied. Locate hardware to comply with DHI-WDHS-3. Comply with final hardware schedules, door frame Shop Drawings, DHI A115-W series standards, and hardware templates.

1. Coordinate with hardware mortises in metal frames to verify dimensions and alignment before factory machining.

C. Openings: Factory cut and trim openings through doors.

1. Light Openings: Trim openings with moldings of material and profile indicated.
2. Glazing: Factory install glazing in doors indicated to be factory finished. Comply with applicable requirements in Section 088000 "Glazing."

2.7 FACTORY FINISHING

A. General: Comply with referenced quality standard for factory finishing. Complete fabrication, including fitting doors for openings and machining for hardware that is not surface applied, before finishing.

1. Finish faces, all four edges, edges of cutouts, and mortises. Stains and fillers may be omitted on top and bottom edges, edges of cutouts, and mortises.

B. Factory finish doors.

C. Transparent Finish:

1. Grade: Premium.
2. Finish: AWI conversion varnish or catalyzed polyurethane system.
3. Staining: Per Finish Schedule color legend.
4. Effect: Filled finish.

PART 3 - EXECUTION

3.1 EXAMINATION

A. Examine doors and installed door frames before hanging doors.

1. Verify that frames comply with indicated requirements for type, size, location, and swing characteristics and have been installed with level heads and plumb jambs.
2. Reject doors with defects.

B. Proceed with installation only after unsatisfactory conditions have been corrected.

3.2 INSTALLATION

A. Hardware: For installation, see Section 087100 "Door Hardware."

B. Installation Instructions: Install doors to comply with manufacturer's written instructions and the referenced quality standard, and as indicated.

C. Factory-Finished Doors: Restore finish before installation if fitting or machining is required at Project site.

3.3 ADJUSTING

A. Operation: Rehang or replace doors that do not swing or operate freely.

B. Finished Doors: Replace doors that are damaged or that do not comply with requirements. Doors may be repaired or refinished if work complies with requirements and shows no evidence of repair or refinishing.

END OF SECTION

SECTION 081613

FRP FLUSH DOORS

PART 1 - GENERAL

1.1 RELATED DOCUMENTS

A. Drawings and general provisions of the Contract, including General and Supplementary Conditions and Division 01 Specification Sections, apply to this Section.

1.2 SUMMARY

A. Section Includes:

1. Fiberglass reinforced polyester (FRP) flush doors with aluminum frames.

1.3 ACTION SUBMITTALS

A. Product Data: Submit manufacturer's product data, including description of materials, components, fabrication, finishes, and installation.

B. Shop Drawings: Submit manufacturer's shop drawings, including elevations, sections, and details, indicating dimensions, tolerances, materials, fabrication, doors, panels, framing, hardware schedule, and finish.

C. Samples:

1. Door: Submit manufacturer's sample of door showing face sheets, core, framing, and finish.
2. Color: Submit manufacturer's samples of standard colors of doors and frames.

D. Test Reports: Submit certified test reports from qualified independent testing agency indicating doors comply with specified performance requirements.

E. Manufacturer's Project References: Submit list of successfully completed projects including project name and location, name of architect, and type and quantity of doors manufactured.

F. Maintenance Manual: Submit manufacturer's maintenance and cleaning instructions for doors, including maintenance and operating instructions for hardware.

G. Warranty: Submit manufacturer's standard warranty.

1.4 QUALITY ASSURANCE

A. Manufacturer's Qualifications: Continuously engaged in manufacturing of doors of similar type to that specified, with a minimum of 25 years successful experience.

1.5 DELIVERY, STORAGE, AND HANDLING

A. Delivery: Deliver materials to site in manufacturer's original, unopened containers and packaging, with labels clearly identifying opening door mark and manufacturer.

B. Storage: Store materials in clean, dry area indoors in accordance with manufacturer's instructions.

C. Handling: Protect materials and finish from damage during handling and installation.

1.6 WARRANTY

A. Warrant doors, frames, and factory hardware against failure in materials and workmanship, including excessive deflection, faulty operation, defects in hardware installation, and deterioration of finish or construction in excess of normal weathering.

B. Warranty Period: Ten years from Substantial Completion.

PART 2 - PRODUCTS

2.1 FLUSH TYPE EXTERIOR FRP DOORS

A. Basis-of-Design Product: Subject to compliance with requirements, provide Commercial Door Systems; Wide Stile Door Systems, Model F5OOHD, or comparable product by one of the following:

1. Special-Lite.
2. Cline Doors.

B. Test Reports and Performance Requirements:

1. Door Leaf Requirement Tests: Door leaf without frame or hardware and with a minimum lite cut out of 12 inches by 24 inches is to meet the following criteria:

a. Concentrated Load Bow Test: 4200 lbs. minimum load with no permanent deflection to door leaf.
b. Torsion Twist Test: @300 lbs. minimum load with no permanent set to door leaf.

2. Face Sheet Requirement Tests: FRP material and FRP face sheets with core material are to meet the following criteria:

a. Center Door Section (face sheet/core/face sheet):

1) Gardner Impact Test - ASTM D5420 – 411.84 in-lb.

b. FRP Material (MR85):

1) Flexural Strength Test:

a) ASTM D790 - 22,680 psi (inward).
b) 24,400 psi (outward).

2) Izod Impact Strength Test:

a) ASTM D256 - 15.36 ft-lb./in thickness.

3) Barcol Hardness - ASTM D5420 – 50.

C. Materials:

1. Aluminum Members:

a. Doors, frames, miscellaneous components, and entrance systems accessories are to be from the same manufacturer. Splitting the source for these items will not be permitted.
b. Provide alloy and temper as recommended for resistance to corrosion and color control. Aluminum member references are ASTM B 221 for extrusions and ASTM B 209 for sheets.

2. Aluminum Edged Fiberglass (FRP) Panels:

a. Construction: Panels will be constructed of two sheets of 0.120 fiberglass sheets bonded to 3/4-inch core material. Panel thickness will be 1-inch. An aluminum frame surrounds the perimeter of the panel, and measures 1 inch by 1 inch by 1 inch with 1/8-inch wall thickness.
b. Wood edged panels will not be accepted.
c. Core material will be 25-psi density polystyrene with a flame spread rating higher than 25 requiring an aluminum liner between the FRP face sheet and the urethane core material. Core material must have a proven record for use in panel fabrication without delaminating. Urethane core panels will require a letter from the manufacturer offering special guarantee that the FRP face sheets will not delaminate (bubble) for a period of 10 years, and that the manufacturer will cover all replacement costs if delamination does occur.

1) Minimum R-value: 11.

d. FRP face sheets will be 0.120 minimum thickness with a pebble like surface.
e. FRP face sheets are MR85 high impact frp material that has been tested by ASTM D5420 Gardner Impact Test with "Mean Failure Energy" rating no lower than 411.84 in-lb.
f. Colors: White.

3. Extra Heavy-Duty Fiberglass Wide Stile (FRP) Doors:

a. Structural Main Frame: Doors have an aluminum main frame constructed from extruded aluminum 6063 -T6 alloy. Doors are 1-3/4 inch thick. Main frame tube is to be a single extruded unit measuring 1-1/2 inches by 5-1/2 inches (O.D.) on both side stiles, and 6-inches (O.D.) Top and Bottom rails. Spliced extrusions that are joined together to measure 6 inches will not be accepted.
b. Main Frame Wall Thickness:

1) Side Stiles: Minimum 3/16-inch-thick hinge edge wall.
2) Top and Bottom Rails: Minimum 1/8-inch-thick outside edge wall. (tie rod spline built into tube)
3) All Rails and Stiles: Minimum 1/8-inch-thick face walls.
4) All Rails and Stiles: Minimum 1/8-inch-thick inside edge wall.

c. Main Frame Joinery: Assembly for the meeting joints of the Rails and Stiles on the main frame are to be mortise and tenon on all four joints:

1) Secured with:

a) 2 Tie Rods in Head Rail.
b) 1 Tie Rod in Bottom Rail.

d. Welded joints will not be accepted.

4. Inter-Loc Edge Trim: All aluminum trim is completely removable. All parts of the door are replaceable and repairable in the field. No fastening devices are exposed on the Stile Edge Trims.

a. Snap-on or screw-on stile trim will not be accepted.

5. Weatherstripping: Center stiles of pairs will have pile weather-stripping 0.500 backing width, 0.5-inch pile height.
6. Hardware Reinforcing: Closer reinforcing to be 3/16-inch steel inserted into head rail. Other surface applied hardware is reinforced with the standard main frame tube wall thickness of 1/8 inch. Reinforcing for mortise and concealed hardware is to be done per template requirements.

a. Hex or thru bolts will not be accepted.
b. Flush mounted door pulls must be provided as part of hardware requirement.

7. Wide Stile FRP doors will carry a 25-year limited warranty on doors structural integrity, main frame, and the lamination between face sheets and core. Warrantees are to be in writing fro the door manufacturer.

2.2 ALUMINUM FINISHES

A. High-Performance Organic Finish: Two-coat fluoropolymer finish complying with AAMA 2604 and containing not less than 70 percent PVDF resin by weight in color coat. Prepare, pretreat, and apply coating to exposed metal surfaces to comply with coating and resin manufacturers' written instructions.

1. Color: White.

PART 3 - EXECUTION

3.1 EXAMINATION

A. Examine areas to receive doors. Notify Architect of conditions that would adversely affect installation or subsequent use. Do not proceed with installation until unsatisfactory conditions are corrected.

3.2 PREPARATION

A. Ensure openings to receive frames are plumb, level, square, and in tolerance.

3.3 INSTALLATION

A. Install doors in accordance with manufacturer's instructions.

B. Install doors plumb, level, square, true to line, and without warp or rack.

C. Anchor frames securely in place.

D. Separate aluminum from other metal surfaces with bituminous coatings or other means approved by Architect.

E. Set thresholds in bed of mastic and backseal.

F. Install exterior doors to be weathertight in closed position.

G. Repair minor damages to finish in accordance with manufacturer's instructions and as approved by Architect.

H. Remove and replace damaged components that cannot be successfully repaired as determined by Architect.

3.4 FIELD QUALITY CONTROL

A. Manufacturer's Field Services: Manufacturer's representative shall provide technical assistance and guidance for installation of doors.

3.5 ADJUSTING

A. Adjust doors, hinges, and locksets for smooth operation without binding.

3.6 CLEANING

A. Clean doors promptly after installation in accordance with manufacturer's instructions.

B. Do not use harsh cleaning materials or methods that would damage finish.

3.7 PROTECTION

A. Protect installed doors to ensure that, except for normal weathering, doors will be without damage or deterioration at time of substantial completion.

END OF SECTION

SECTION 083113

ACCESS DOORS AND FRAMES

PART 1 - GENERAL

1.1 RELATED DOCUMENTS

A. Drawings and general provisions of the Contract, including General and Supplementary Conditions and Division 01 Specification Sections, apply to this Section.

1.2 SUMMARY

A. Section includes non-rated access doors and frames for walls and ceilings.

1.3 ACTION SUBMITTALS

A. Product Data: For each type of product.

1. Include construction details, material descriptions, dimensions of individual components and profiles, and finishes.

B. Product Schedule: For access doors and frames. Use same designations indicated on Drawings.

PART 2 - PRODUCTS

2.1 ACCESS DOORS AND FRAMES

A. Manufacturers: Subject to compliance with requirements, available manufacturers offering products that may be incorporated into the Work include, but are not limited to, the following:

1. Acudor Products, Inc.
2. JL Industries, Inc.; a division of the Activar Construction Products Group.
3. Karp Associates, Inc.
4. Larsens Manufacturing Company.
5. Metropolitan Door Industries Corp.
6. Milcor; Commercial Products Group of Hart & Cooley, Inc.
7. Nystrom, Inc.

B. Flush Access Doors and Frames with Exposed Trim (In CMU Walls):

1. Description: Face of door flush with frame, with exposed flange and concealed hinge.
2. Locations: Wall and ceiling.
3. Door Size: As indicated on Drawings.
4. Uncoated Steel Sheet for Door: Nominal 0.075 inch, 14 gage, factory primed.
5. Frame Material: Nominal 0.060 inch, 16 gage, same material and finish as door.
6. Latch and Lock: Prepared for mortise cylinder, including 2 keys.

C. Flush Access Doors with Concealed Flanges (In Stud Wall):

1. Description: Face of door flush with frame; with concealed flange for gypsum board installation and concealed hinge.
2. Locations: Wall and ceiling.
3. Door Size: As indicated on Drawings.
4. Uncoated Steel Sheet for Door: Nominal 0.075 inch, 14 gage, factory primed.
5. Frame Material: Nominal 0.060 inch, 16 gage, same material and finish as door.
6. Latch and Lock: Prepared for mortise cylinder, including 2 keys.

2.2 MATERIALS

A. Steel Plates, Shapes, and Bars: ASTM A 36/A 36M.

B. Steel Sheet: Uncoated or electrolytic zinc coated, ASTM A 879/A 879M, with cold-rolled steel sheet substrate complying with ASTM A 1008/A 1008M, Commercial Steel (CS), exposed.

C. Inserts, Bolts, and Anchor Fasteners: Hot-dip galvanized steel according to ASTM A 153/A 153M or ASTM F 2329.

2.3 FABRICATION

A. General: Provide access door and frame assemblies manufactured as integral units ready for installation.

B. Metal Surfaces: For metal surfaces exposed to view in the completed Work, provide materials with smooth, flat surfaces without blemishes. Do not use materials with exposed pitting, seam marks, roller marks, rolled trade names, or roughness.

C. Doors and Frames: Grind exposed welds smooth and flush with adjacent surfaces. Furnish mounting holes, attachment devices and fasteners of type required to secure access doors to types of supports indicated.

1. For concealed flanges with drywall bead, provide edge trim for gypsum panels securely attached to perimeter of frames.

2.4 FINISHES

A. Comply with NAAMM's "Metal Finishes Manual for Architectural and Metal Products" for recommendations for applying and designating finishes.

B. Protect mechanical finishes on exposed surfaces from damage by applying a strippable, temporary protective covering before shipping.

C. Appearance of Finished Work: Noticeable variations in same piece are not acceptable. Variations in appearance of adjoining components are acceptable if they are within the range of approved Samples and are assembled or installed to minimize contrast.

D. Painted Finishes: Comply with coating manufacturer's written instructions for cleaning, conversion coating, and applying and baking finish.

1. Factory Primed: Apply manufacturer's standard, lead- and chromate-free, universal primer immediately after surface preparation and pretreatment.

PART 3 - EXECUTION

3.1 EXAMINATION

A. Examine substrates for compliance with requirements for installation tolerances and other conditions affecting performance of the Work.

B. Proceed with installation only after unsatisfactory conditions have been corrected.

3.2 INSTALLATION

A. Comply with manufacturer's written instructions for installing access doors and frames.

3.3 ADJUSTING AND CLEANING

A. Adjust doors and hardware after installation for proper operation.

END OF SECTION

SECTION 083323

OVERHEAD COILING DOORS

PART 1 - GENERAL

1.1 RELATED DOCUMENTS

A. Drawings and general provisions of the Contract, including General and Supplementary Conditions and Division 01 Specification Sections, apply to this Section.

1.2 SUMMARY

A. Section Includes:

1. Non-insulated service doors.
2. Insulated service doors.

1.3 ACTION SUBMITTALS

A. Product Data: For each type and size of overhead coiling door and accessory.

1. Include construction details, material descriptions, dimensions of individual components, profiles for slats, and finishes.
2. Include rated capacities, operating characteristics, electrical characteristics, and furnished accessories.

B. Shop Drawings: For each installation and for special components not dimensioned or detailed in manufacturer's product data.

1. Include plans, elevations, sections, and mounting details.
2. Include details of equipment assemblies, and indicate dimensions, required clearances, method of field assembly, components, and location and size of each field connection.
3. Include points of attachment and their corresponding static and dynamic loads imposed on structure.
4. For exterior components, include details of provisions for assembly expansion and contraction and for excluding and draining moisture to the exterior.

C. Samples for Initial Selection: Manufacturer's finish charts showing full range of colors and textures available for units with factory-applied finishes.

1. Include similar Samples of accessories involving color selection.

1.4 INFORMATIONAL SUBMITTALS

A. Qualification Data: For qualified Installer.

B. Sample Warranty: For special warranty.

1.5 CLOSEOUT SUBMITTALS

A. Maintenance Data: For overhead coiling doors to include in maintenance manuals.

1.6 QUALITY ASSURANCE

A. Installer Qualifications: An entity that employs installers and supervisors who are trained and approved by manufacturer for both installation and maintenance of units required for this Project.

1. Maintenance Proximity: Not more than two hours' normal travel time from Installer's place of business to Project site.

B. Accessibility Standard: Comply with applicable provisions in the USDOJ's "2010 ADA Standards for Accessible Design" and ICC A117.1.

1.7 WARRANTY

A. Special Warranty: Manufacturer agrees to repair or replace components of doors that fail in materials or workmanship within specified warranty period.

1. Warranty Period: Two years from date of Substantial Completion.

PART 2 - PRODUCTS

2.1 MANUFACTURERS

A. Source Limitations: Obtain overhead coiling doors from single source from single manufacturer.

1. Obtain operators and controls from overhead coiling-door manufacturer.

2.2 PERFORMANCE REQUIREMENTS

A. Structural Performance, Exterior Doors: Capable of withstanding the following design wind loads:

1. Design Wind Load: Uniform pressure (velocity pressure) of 20 lbf/sq. ft., acting inward and outward
2. Deflection Limits: Design overhead coiling doors to withstand design wind load without evidencing permanent deformation or disengagement of door components.

2.3 INTERIOR DOOR ASSEMBLY

1. Basis-of-Design Product: Subject to compliance with requirements, provide Cornell Iron Works, Inc.; ESD10 Rolling Service Door or comparable product by one of the following:

a. Cookson Company.
b. Overhead Door Corporation.

c. Wayne-Dalton Corp.

B. Overhead Interior Coiling Doors: Non-rated overhead coiling doors, conforming to the following:

1. Face-of-wall mounted.
2. Slats: Type 5F slat, interlocking, roll-formed, flat-faced, 22 gage (minimum), stainless steel with No. 4 finish; refer to the Door Schedule for door number.
3. Nominal Slat Size: 2-5/8 inches wide x required length.
4. Slat Ends: Alternate slats fitted with nylon to act as wearing surface in guides and to prevent lateral movement.
5. Curtain Bottom: Fitted with stainless steel angles and vinyl astragal to provide reinforcement and positive contact with floor in closed position.

C. Guides: 12 gage rolled stainless steel track, continuous, vertical mounted; stainless steel mounting brackets.

D. Roller Shaft Counterbalance: Steel pipe and helical steel torsion spring system, capable of producing torque sufficient to ensure smooth operation of curtain from any position and capable of holding position at mid-travel; with adjustable spring tension.

E. Hood: 24-gauge galvanized steel with reinforced top and bottom edges. Provide minimum 1/4-inch steel intermediate support brackets as required to prevent excessive sag. Refer to the Drawings for enclosure details at hood.

F. Motorized Doors: Cornell Iron Works Model #GH Motor Operator conforming to the following:

1. Electric Operator:

a. Description: UL-Listed, horizontal front-of-coil bracket mounted.
b. Motor Enclosure: NEMA Type 1, open drip proof.
c. Motor Rating: 3/4 HP, continuous duty.
d. Motor Voltage: 120-volt, single phase.
e. Brake: Electric brake and limit switches.
f. Motor Controller: Size 0, reversing magnetic, electrically and mechanically interlocked.

2. Control Station: Keyed control (open/close/stop) constant pressure control for each operator; 24-volt circuit; flush mounted. Control station shall be provided on one side of each door.
3. Safety Edge: Located at door bottom, full width, electro-mechanical sensitized type, wired to stop door upon striking object; hollow neoprene covered seal.
4. Door drive shall utilize minimum #50 roller chain and sprockets. Operator shall be equipped with electrically interlocked floor level disconnect and chain hoist for manual operation

2.4 EXTERIOR DOOR ASSEMBLY

A. Insulated Service Door: Overhead coiling door formed with curtain of interlocking metal slats.

1. Basis-of-Design Product: Subject to compliance with requirements, provide Cornell Iron Works, Inc.; ESD20 “Thermiser” Insulated Rolling Service Door or comparable product by one of the following:

a. Cookson Company.
b. Overhead Door Corporation.
c. Wayne-Dalton Corp.

B. Operation Cycles: Door components and operators capable of operating for not less than 50,000. One operation cycle is complete when a door is opened from the closed position to the fully open position and returned to the closed position.

1. Include tamperproof cycle counter.
2. Operation Cycles: Door components and operators capable of operating for not less than 50,000. One operation cycle is complete when a door is opened from the closed position to the fully open position and returned to the closed position.
3. Slat Material: Type 6F, (Exterior/Interior): Galvanized steel/galvanized steel; 18/24 gauge, ASTM A653 Commercial Quality, with G-90 zinc coating.

   a. Insulation: 7/8-inch foamed-in-place, closed-cell urethane.
   b. Total Slat Thickness: 15/16-inch.

4. Bottom Bar: Reinforced extruded aluminum interior face with full depth insulation and exterior skin slat to match curtain material and gauge.
5. Fabricate interlocking sections with high strength nylon endlocks on alternate slats each secured with two 1/4" rivets. Provide windlocks as required to meet specified wind load.
6. Exterior Slat Finish: Baked-on polyester powder coat; color selection by the Architect.
7. Bottom Bar Finish: Match slats.
8. Design Load: Doors to resist 20 mph wind load.

C. Guides: Fabricate with minimum 3/16-inch structural steel angles. Provide windlock bars of same material when windlocks are required to meet specified wind load.

D. Counterbalance Shaft Assembly:

1. Barrel: Steel pipe capable of supporting curtain load with maximum deflection of 0.03 inches per foot of width.
2. Spring Balance: Oil-tempered, heat-treated steel helical torsion spring assembly designed for proper balance of door to ensure that maximum effort to operate will not exceed 25 lbs. Provide wheel for applying and adjusting spring torque.

E. Brackets: Fabricate from minimum 3/16-inch steel plate with permanently lubricated ball or roller bearings at rotating support points to support counterbalance shaft assembly and form end closures.

F. Hood: 24-gauge galvanized steel, with reinforced top and bottom edges. Provide minimum 1/4-inch steel intermediate support brackets as required to prevent excessive sag.

G. Weather/Sensing Edge: Provide automatic reversing control by automatic sensing switch within neoprene or rubber astragal extending full width of door bottom bar.

1. Provide “LiteTouch” self-monitoring sensing edge system. Contact with rubber profile will interrupt contained infrared light beam, signaling door operator to immediately stop downward travel and reverse direction to fully opened position.

H. Motor-Operated Doors:

1. Supply Cornell Model MG, heavy-duty, UL-listed, gearhead hoist-type operator (MGR 75).

2. Rated 3/4 HP, 120 Volts, 1 Phase.
3. Provide UL-listed electric door operator assembly of size and capacity recommended by door manufacturer; complete with electric motor and factory pre-wired motor controls, worm-gear reduction unit, and solenoid operated brake.
4. Motor shall be high starting torque, continuous duty, industrial type, protected against overload by current-sensing or thermal overload device. Speed reduction shall be worm-gear-in-oil-bath gear reducer with synthetic "All Climate" oil. Shall provide 45:1 speed reduction. Door drive shall utilize minimum #50 roller chain and sprockets.
5. Operator shall be equipped with electrically interlocked floor level disconnect and chain hoist for manual operation and electric solenoid-actuated brake to stop motor and hold door in position. 6. Operator shall be capable of driving door at a speed of 8 to 9 inches per second.
6. Fully adjustable, driven linear type limit switch mechanism shall synchronize operator with door. Low friction nylon limit nuts fitted on threaded steel shaft, rotating on iolite self-lubricating bronze bushings.
7. Motor shall be removable without affecting limit switch settings.
8. Operator Controls:

    a. Exterior Control Station: Surface-mounted, "Open/Close/Stop" push buttons with keyed lock-out, not master keyable; NEMA 4.

2.5 MATERIALS, GENERAL

A. Electrical Components, Devices, and Accessories: Listed and labeled as defined in NFPA 70, by a qualified testing agency, and marked for intended location and application.

2.6 GENERAL FINISH REQUIREMENTS

A. Comply with NAAMM/NOMMA 500 for recommendations for applying and designating finishes.

B. Appearance of Finished Work: Noticeable variations in same piece are not acceptable. Variations in appearance of adjoining components are acceptable if they are within the range of approved Samples and are assembled or installed to minimize contrast.

2.7 STEEL AND GALVANIZED-STEEL FINISHES

A. Baked-Enamel or Powder-Coat Finish: Manufacturer's standard baked-on finish consisting of prime coat and thermosetting topcoat. Comply with coating manufacturer's written instructions for cleaning, pretreatment, application, and minimum dry film thickness.

1. Color as selected by the Architect.

PART 3 - EXECUTION

3.1 EXAMINATION

A. Examine substrates areas and conditions, with Installer present, for compliance with requirements for substrate construction and other conditions affecting performance of the Work.

B. Examine locations of electrical connections.

C. Proceed with installation only after unsatisfactory conditions have been corrected.

3.2 INSTALLATION

A. Install overhead coiling doors and operating equipment complete with necessary hardware, anchors, inserts, hangers, and equipment supports; according to manufacturer's written instructions and as specified.

B. Install overhead coiling doors, hoods, and operators at the mounting locations indicated for each door.

C. Accessibility: Install overhead coiling doors, switches, and controls along accessible routes in compliance with regulatory requirements for accessibility.

D. Power-Operated Doors: Install according to UL 325.

3.3 ADJUSTING

A. Adjust hardware and moving parts to function smoothly so that doors operate easily, free of warp, twist, or distortion.

B. Lubricate bearings and sliding parts as recommended by manufacturer.

C. Adjust seals to provide weathertight fit around entire perimeter.

3.4 DEMONSTRATION

A. Engage a factory-authorized service representative to train Owner's maintenance personnel to adjust, operate, and maintain overhead coiling doors.

END OF SECTION

SECTION 083513.23

ACCORDION FOLDING FIRE DOORS

PART 1 - GENERAL

1.1 RELATED DOCUMENTS

A. Drawings and general provisions of the Contract, including General and Supplementary Conditions and Division 01 Specification Sections, apply to this Section.

1.2 SUMMARY

A. Section Includes:

1. Horizontal sliding, accordion folding fire doors.

1.3 RELATED SECTIONS

A. All headers, support structures, fire protection of support structures, surrounding insulation, jambs, storage pockets, blocking and trim shall be furnished and installed by other sections.

B. All electrical wire, wiring, conduit and electrical boxes shall be furnished and installed by electrical section including connections to smoke detectors and building fire alarm panels.

C. Drilling/placement of anchorage points into pre or post tensioned decks, welding/punching/drilling steel members and all drywall work.

D. Interface to the fire doors shall be accomplished using a MODBUS gateway (by others) configured for RS485 communications. Use 18-gauge single twisted pair communication wire from the MODBUS gateway and daisy chain connections to each fire door (maximum of 32 doors per gateway). Terminate the end-of-line with a load resistor as specified by the MODBUS gateway manufacturer.

E. Communication lines are daisy chained from the MODBUS gateway to each fire door. The communications line is connected to a USOC RJ11, 6 Position, 4 Contact wall plate at each door. The [COM+]/[COM-] wires are connected to the center pins (Red and Green wires respectively). The plate is then mounted to a j-box centrally located on the back wall of the fire door pocket. All wiring, conduit, j-boxes and wall plates are provided by the Electrical Contractor. Connection from the wall plate to the fire door controller is accomplished by a modular plug data cable provided by the manufacturer.

1.4 PREINSTALLATION MEETINGS

A. Preinstallation Conference: Conduct conference at Project site.

1.5 ACTION SUBMITTALS

A. Product Data: For each type of product.

1. Include construction details, material descriptions, dimensions of individual components and profiles, and finishes for folding doors.

B. Shop Drawings:

1. Include plans, elevations, sections, and installation details.
2. Include clearances required for operation, operating and control mechanisms, access requirements, storage pockets and pocket doors, and accessory items.
3. Fire-Release System: Describe system, including testing and resetting instructions for fire-rated folding doors.
4. Include diagrams for power, signal, and control wiring.

C. Samples for Verification: For each type of exposed finish.

1. Include Samples of hardware and accessories to verify color and finish selection.

1.6 INFORMATIONAL SUBMITTALS

A. Qualification Data: For Installer.

B. Product Test Reports: For each fire-rated folding door, for tests performed by a qualified testing agency.

C. Evaluation Reports: For fire-rated folding doors, from ICC-ES.

1.7 CLOSEOUT SUBMITTALS

A. Operation and Maintenance Data: For folding doors to include in operation and maintenance manuals, troubleshooting and repair methods, and wiring diagrams.

1.8 QUALITY ASSURANCE

A. Installation shall be performed by factory trained and certified installers with a minimum of three years' experience installing electrically operated accordion folding fire doors.

B. Fire doors shall be listed by Underwriters Laboratories for ratings as indicated, when tested in accordance with the requirements of UL 10B NFPA 252.

C. Automatic closing system shall be listed by Underwriters Laboratories in accordance with the requirements of UL 864 and be listed for use with the assembly in compliance with NFPA 80, Chapter 9.

D. Fire doors used for smoke and draft control shall bear the "S" mark on the fire door label and shall have an air leakage of less than 3 ft^3/ft^2 at 0.1 inch of water column pressure when tested in accordance with UL 1784 with an artificial bottom seal.

E. Fire doors used at the point of access to an elevator shall bear the “SE” mark on the fire door label and shall have an air leakage of less than 3 ft^3/ft^2 at 0.1 inch of water column pressure when tested in accordance with UL 1784 without an artificial bottom seal.

F. Fire Doors shall be capable of resisting an air pressure differential up to 0.05 inches of water column.

1.9 DELIVERY, STORAGE, AND HANDLING

A. Deliver to the job site in manufacturer's original, unopened package, labeled to show name, brand and type.

1.10 COORDINATION

A. Coordinate with the following:

1. Fire Alarm system.
2. Electrical.
3. Panel pocket doors finish and wood veneer paneling (if applicable).
4. Floor and ceiling finish.

B. Assure accurate installation of header, jamb, and trim. Provide “As-Built” dimensions for opening and storage pocket. Supervise unloading and handling of materials.

C. Store boxes flat (not more than three high) in a protected dry area.

D. Permanent power shall be in-place and ready for final connection when fire doors are installed. Assure access to and proper clearance for motor operators.

E. After testing the fire alarm system, automatic-closing fire doors shall be re-set to the original position.

1.11 WARRANTY

A. Materials and installation shall be warranted against defects in workmanship for a period of one (1) year from the date of substantial completion.

PART 2 - PRODUCTS

2.1 MANUFACTURERS

A. Horizontal sliding accordion folding fire doors shall be Won-Door FireGuard Compressed Stack model FG-CS 60, manufactured by Won-Door Corporation, Salt Lake City, UT.

2.2 ACCORDION FIRE DOORS – GENERAL

A. Provide electrically powered self-closing fire doors of configurations indicated on the drawings.

1. Fire rating as required.

B. Fire Rating – Fire doors shall be listed by Underwriters Laboratory as special purpose fire doors having a 60, minute fire-resistive rating in accordance with the requirements of UL 10B and NFPA 252.

C. Closing and Opening Operation: Automatic Closing System including motor operator and releasing devices shall be a Microprocessor-based system rated to UL864 (Releasing Device Control Unit) and shall commence closing upon activation by fire alarm system and/or by low battery charge.

1. Obstruction Detection: Contact with an obstruction shall cause the door to stop, reverse enough to remove pressure on the leading edge, pause, and then re-close when in an alarm condition.
2. While the door is opening under motor power, constant pressure to the leading edge in the direction of opening shall cause the door to continue to open until the leading edge is released. This is termed motor-assisted opening.
3. Constant pressure to the leading edge while not under motor power shall prevent motor operation and allow the door to be opened manually.

D. Exit Hardware Operation: Provide fire exit hardware on both sides of door.

1. In emergency mode, a slight pressure on the hardware will cause the door to open a minimum of 32 inches, pause for 3 seconds, and then automatically close.
2. The open distance shall be field programmable, up to the entire opening width, if the local authority requires an opening larger than 32 inches.
3. The pause before re-close shall be field programmable, up to 30 seconds, if the local authority requires a longer pause time.
4. The exit hardware shall have the ability when not in the emergency (fire) mode to be used to open the door and move it back into the storage pocket.

2.3 COMPONENTS

A. Door Construction: Two parallel, accordion-type walls independently suspended with no floor tracks, pantographs, or interconnections.

1. Panels: 24-gauge steel, V-grooved; modular in design; capable of in-place repair.
2. Perimeter Seals**:** shall consist of continuous extruded vinyl sweeps attached to the top and bottom of the fire door to form a smoke and draft seal.
3. Hanging Weight: 5.5 pounds per sq. ft. when extended across opening.
4. Finish: All steel parts factory-applied enamel.
5. Color: Manufacturer’s standard platinum.

B. Suspension System: Two tracks, on 8-inch centers, attached to overhead structural support.

1. Tracks: .125 aluminum.
2. Panel Hangers: Every other panel is suspended by a steel hanger pin and ball bearing roller.
3. Lead Post Hangers: 16-gauge steel structural tube frame with 18-gauge steel preformed cover. The lead post shall function as an integrated cover panel over the storage pocket opening when the fire door is in the open position.

C. Power Supply: 12-volt maintenance-free DC battery, automatically maintained at capacity by continuous charger, 120 V AC.

D. Automatic Closing System shall be listed to UL864 including capability to send and receive signals from the Fire Control Panel, and shall consist of the following:

1. Microprocessor based Electronic Control box with the ability to:

   a. Monitor dual power sources continually for peak performance including:

      1) Detect a missing battery, bad battery, or low battery condition.
      2) Detect if the charging circuit is bad.
      3) Detect fuse failures.
      4) Detect high or low AC conditions.

   b. Monitor the health of the drive train.
   c. Monitor inputs including: sticky door block, exit hardware, patron hardware, and key switches.
   d. Run a “watch dog” monitoring circuit which will force a software restart in the event the software hangs, including tracking the number of resets that occur for diagnostic purposes.
   e. Withstand voltages up to 120 volts AC on the fire alarm input circuit without damage including the ability to indicate that the alarm circuit has not been wired as a dry contact, “no voltage” circuit when errant voltages are applied to the circuit.
   f. Communicate with other microprocessors on the system via an internal buss system.
   g. Indicate faults or supervised information both locally and at a remote location.

2. Motor Operator Assembly including a DC gear-motor, drive sprocket, clutch, and position sensors. The motor shall drive the fire door by means of a chain attached to a stabilizer bar trolley. The motor shall be rated for continuous use with unlimited cycle duty.
3. If a key switch is NOT used, A door control momentary rocker switch shall be mounted on one side of the door and shall function as follows:

   a. Pressing the upper portion shall close the door and/or clear fault conditions.
   b. Pressing the lower portion of the switch shall open the door and/or temporarily mute the local horn.

4. Leading Edge Obstruction Detector shall be pressure sensitive such that contact with an obstruction shall cause the door to stop, pause for 3 seconds, then re-close when in alarm mode. The obstruction detection system shall be fully functional at all times.
5. Exit Hardware will be located on both sides of each fire door.

E. The header shall be provided as an integrated part of the door assembly Including integrated self-supporting track, threaded rods and mechanical attachment hardware.

F. A Key Switch shall be provided, located as directed by the Architect.

G. Remote Operation and Monitoring. Fire doors shall be remotely monitored and controlled through a building monitoring system (BMS) and interface with the BMS using MODBUS communication.

1. MODBUS Door Controls shall Include: Open, Close, Set Fire Mode for Testing, Reset, Lock (with Access Control Option), Unlock (with Access Control Option).
2. MODBUS Monitor Status: Door position across opening width, Door Status (OPEN, CLOSED, OPENING, CLOSING), Errors, Battery Voltage, AC Voltage.

2.4 RELATED CONSTRUCTION

A. Track Support Construction: Provide supports attached to structure and mounting surface for track including drilling/placement of anchorage points into pre or post tensioned decks, welding/punching/drilling steel members, and all drywall work; comply with door manufacturer's instructions and recommendations.

B. Pocket Construction: Provide pocket for concealment of accordion door when open; comply with door manufacturer's instructions and recommendations.

PART 3 - EXECUTION

3.1 EXAMINATION

A. Verify that adjacent construction is suitable for installation of door.

B. Verify that electrical utilities have been installed and are accessible.

C. Verify that door opening is plumb and header is level and of correct dimensions.

D. Notify Architect of any unacceptable conditions or varying dimensions.

3.2 INSTALLATION

A. Install in accordance with manufacturer's instructions, shop drawings and NFPA 80.

B. Install fire doors plumb and level.

3.3 ADJUSTING

A. Adjust door installation to provide uniform clearances and smooth, quiet, non-binding operation.

B. Test that all operations are functional and meet the requirements of local codes.

3.4 CLEANING

A. Clean surfaces using manufacturer's recommended means and methods.

3.5 PROTECTION

A. Protect installed work from damage.

3.6 STORAGE OF WASTE AND RECYCLING

A. Store and recycle waste in accordance with Section 01 74 19 Construction Waste Management and Disposal.

END OF SECTION

SECTION 084113

ALUMINUM-FRAMED ENTRANCES AND STOREFRONTS

PART 1 - GENERAL

1.1 RELATED DOCUMENTS

A. Drawings and general provisions of the Contract, including General and Supplementary Conditions and Division 01 Specification Sections, apply to this Section.

1.2 SUMMARY

A. Section Includes:

1. Storefront framing.
2. Manual-swing entrance doors.

1.3 PREINSTALLATION MEETINGS

A. Preinstallation Conference: Conduct conference at Project site.

1.4 ACTION SUBMITTALS

A. Product Data: For each type of product.

1. Include construction details, material descriptions, dimensions of individual components and profiles, and finishes.

B. Shop Drawings: For aluminum-framed entrances and storefronts. Include plans, elevations, sections, full-size details, and attachments to other work.

1. Include details of provisions for assembly expansion and contraction and for draining moisture occurring within the assembly to the exterior.
2. Include full-size isometric details of each type of vertical-to-horizontal intersection of aluminum-framed entrances and storefronts, showing the following:

a. Joinery, including concealed welds.
b. Anchorage.
c. Expansion provisions.
d. Glazing.
e. Flashing and drainage.

3. Show connection to and continuity with adjacent thermal, weather, air, and vapor barriers.

C. Samples for Verification: For each type of exposed finish required, in manufacturer's standard sizes.

D. Entrance Door Hardware Schedule: Prepared by or under supervision of supplier, detailing fabrication and assembly of entrance door hardware, as well as procedures and diagrams. Coordinate final entrance door hardware schedule with doors, frames, and related work to ensure proper size, thickness, hand, function, and finish of entrance door hardware.

1.5 INFORMATIONAL SUBMITTALS

A. Qualification Data: For Installer.

B. Energy Performance Certificates: For aluminum-framed entrances and storefronts, accessories, and components, from manufacturer.

1. Basis for Certification: NFRC-certified energy performance values for each aluminum-framed entrance and storefront.

C. Product Test Reports: For aluminum-framed entrances and storefronts, for tests performed by manufacturer and witnessed by a qualified testing agency.

D. Field quality-control reports.

E. Sample warranties.

1.6 CLOSEOUT SUBMITTALS

A. Maintenance Data: For aluminum-framed entrances and storefronts to include in maintenance manuals.

1.7 QUALITY ASSURANCE

A. Installer Qualifications: An entity that employs installers and supervisors who are trained and approved by manufacturer.

B. Product Options: Information on Drawings and in Specifications establishes requirements for aesthetic effects and performance characteristics of assemblies. Aesthetic effects are indicated by dimensions, arrangements, alignment, and profiles of components and assemblies as they relate to sightlines, to one another, and to adjoining construction.

1. Do not change intended aesthetic effects, as judged solely by Architect, except with Architect's approval. If changes are proposed, submit comprehensive explanatory data to Architect for review.

1.8 MOCKUPS

A. Mockups: Build mockups to verify selections made under Sample submittals and to demonstrate aesthetic effects and set quality standards for fabrication and installation.

1. Build in-place mockup of typical wall area as shown on Drawings.
2. Testing shall be performed on mockups according to requirements in "Field Quality Control" Article.

3. Approval of mockups does not constitute approval of deviations from the Contract Documents contained in mockups unless Architect specifically approves such deviations in writing.

1.9 WARRANTY

A. Special Warranty: Manufacturer agrees to repair or replace components of aluminum-framed entrances that do not comply with requirements or that fail in materials or workmanship within specified warranty period.

1. Warranty Period: Five years from date of Substantial Completion.

B. Special Finish Warranty: Standard form in which manufacturer agrees to repair finishes or replace aluminum that shows evidence of deterioration of factory-applied finishes within specified warranty period.

1. Warranty Period: 10 years from date of Substantial Completion.

PART 2 - PRODUCTS

2.1 PERFORMANCE REQUIREMENTS

A. General Performance: Comply with performance requirements specified, as determined by testing of aluminum-framed entrances and storefronts representing those indicated for this Project without failure due to defective manufacture, fabrication, installation, or other defects in construction.

1. Aluminum-framed entrances and storefronts shall withstand movements of supporting structure including, but not limited to, story drift, twist, column shortening, long-term creep, and deflection from uniformly distributed and concentrated live loads.
2. Failure also includes the following:

a. Thermal stresses transferring to building structure.
b. Glass breakage.
c. Noise or vibration created by wind and thermal and structural movements.
d. Loosening or weakening of fasteners, attachments, and other components.
e. Failure of operating units.

B. Structural Loads:

1. Wind Loads: As indicated on Drawings.
2. Other Design Loads: As indicated on Drawings.

C. Deflection of Framing Members: At design wind pressure, as follows:

1. Deflection Normal to Wall Plane: Limited to 1/175 of clear span for spans of up to 13 feet 6 inches and to 1/240 of clear span plus 1/4 inch for spans greater than 13 feet 6 inches or an amount that restricts edge deflection of individual glazing lites to 3/4 inch, whichever is less.

D. Structural: Test according to ASTM E 330 as follows:

1. When tested at positive and negative wind-load design pressures, assemblies do not evidence deflection exceeding specified limits.
2. When tested at 150 percent of positive and negative wind-load design pressures, assemblies, including anchorage, do not evidence material failures, structural distress, or permanent deformation of main framing members exceeding 0.2 percent of span.
3. Test Durations: As required by design wind velocity, but not less than 10 seconds.

E. Air Infiltration: Test according to ASTM E 283 for infiltration as follows:

1. Fixed Framing and Glass Area:

a. Maximum air leakage of 0.06 cfm/sq. ft. at a static-air-pressure differential of 6.24 lbf/sq. ft.

2. Entrance Doors:

a. Pair of Doors: Maximum air leakage of 1.0 cfm/sq. ft. at a static-air-pressure differential of 1.57 lbf/sq. ft.
b. Single Doors: Maximum air leakage of 0.5 cfm/sq. ft. at a static-air-pressure differential of 1.57 lbf/sq. ft.

F. Water Penetration under Static Pressure: Test according to ASTM E 331 as follows:

1. No evidence of water penetration through fixed glazing and framing areas when tested according to a minimum static-air-pressure differential of 20 percent of positive wind-load design pressure, but not less than 8 lbf/sq. ft.

G. Energy Performance: Certify and label energy performance according to NFRC as follows:

1. Thermal Transmittance (U-factor): Fixed glazing and framing areas shall have U-factor of not more than 0.44 Btu/sq. ft. x h x deg F as determined according to NFRC 100.
2. Condensation Resistance: Fixed glazing and framing areas shall have an NFRC-certified condensation resistance rating of no less than 62 (frame) as determined according to NFRC 500.

H. Thermal Movements: Allow for thermal movements resulting from ambient and surface temperature changes:

1. Temperature Change: 120 deg F, ambient; 180 deg F, material surfaces.

2.2 STOREFRONT SYSTEMS

A. Basis-of-Design Product: Subject to compliance with requirements, provide Kawneer North America; Heavy Wall Trifab VersaGlaze Framing System I, or a comparable product by one of the following:

1. EFCO Corporation.
2. Oldcastle BuildingEnvelope.
3. YKK AP America Inc.

B. Framing Members: Manufacturer's extruded- or formed-aluminum framing members of thickness required and reinforced as required to support imposed loads.

1. Exterior Framing Construction: Thermally broken.

2. Interior Vestibule Framing Construction: Nonthermal.
3. Glazing System: Retained mechanically with gaskets on four sides.
4. Glazing Plane: Center.
5. Finish: High-performance organic finish.
6. Fabrication Method: Field-fabricated stick system.
7. Aluminum: Alloy and temper recommended by manufacturer for type of use and finish indicated.
8. Steel Reinforcement: As required by manufacturer.

C. Backer Plates: Manufacturer's standard, continuous backer plates for framing members, if not integral, where framing abuts adjacent construction.

D. Brackets and Reinforcements: Manufacturer's standard high-strength aluminum with nonstaining, nonferrous shims for aligning system components.

2.3 ENTRANCE DOOR SYSTEMS

A. Basis-of-Design Product: Subject to compliance with requirements, provide Kawneer; 500 Heavy Wall Entrances, or a comparable product by one of the following:

1. EFCO Corporation.
2. Oldcastle BuildingEnvelope.
3. YKK AP America Inc.

B. Entrance Doors: Manufacturer's standard glazed entrance doors for manual-swing operation.

1. Door Construction: 2-inch overall thickness, with 3/16-inch-thick, extruded-aluminum tubular rail and stile members. Mechanically fasten corners with reinforcing brackets that are deeply penetrated and fillet welded or that incorporate concealed tie rods.

2. Door Design: As indicated.
3. Glazing Stops and Gaskets: Snap-on, extruded-aluminum stops and preformed gaskets.

a. Provide nonremovable glazing stops on outside of door.

2.4 ENTRANCE DOOR HARDWARE

A. Entrance Door Hardware: Hardware not specified in this Section is specified in Section 087100 "Door Hardware."

2.5 GLAZING

A. Glazing: Comply with Section 088000 "Glazing."

B. Glazing Gaskets: Manufacturer's standard sealed-corner pressure-glazing system of black, resilient elastomeric glazing gaskets, setting blocks, and shims or spacers.

C. Glazing Sealants: As recommended by manufacturer.

2.6 MATERIALS

A. Sheet and Plate: ASTM B 209.

B. Extruded Bars, Rods, Profiles, and Tubes: ASTM B 221.

C. Extruded Structural Pipe and Tubes: ASTM B 429/B 429M.

D. Structural Profiles: ASTM B 308/B 308M.

E. Steel Reinforcement:

1. Structural Shapes, Plates, and Bars: ASTM A 36/A 36M.
2. Cold-Rolled Sheet and Strip: ASTM A 1008/A 1008M.
3. Hot-Rolled Sheet and Strip: ASTM A 1011/A 1011M.
4. Primer: Manufacturer's standard zinc-rich, corrosion-resistant primer complying with SSPC-PS Guide No. 12.00; applied immediately after surface preparation and pretreatment. Select surface preparation methods according to recommendations in SSPC-SP COM, and prepare surfaces according to applicable SSPC standard.

2.7 ACCESSORIES

A. Fasteners and Accessories: Manufacturer's standard corrosion-resistant, nonstaining, nonbleeding fasteners and accessories compatible with adjacent materials.

1. Use self-locking devices where fasteners are subject to loosening or turning out from thermal and structural movements, wind loads, or vibration.
2. Reinforce members as required to receive fastener threads.

B. Anchors: Three-way adjustable anchors with minimum adjustment of 1 inch that accommodate fabrication and installation tolerances in material and finish compatible with adjoining materials and recommended by manufacturer.

1. Concrete and Masonry Inserts: Hot-dip galvanized cast-iron, malleable-iron, or steel inserts complying with ASTM A 123/A 123M or ASTM A 153/A 153M requirements.

C. Concealed Flashing: Manufacturer's standard corrosion-resistant, nonstaining, nonbleeding flashing compatible with adjacent materials.

D. Bituminous Paint: Cold-applied asphalt-mastic paint containing no asbestos, formulated for 30-mil thickness per coat.

2.8 FABRICATION

A. Form or extrude aluminum shapes before finishing.

B. Weld in concealed locations to greatest extent possible to minimize distortion or discoloration of finish. Remove weld spatter and welding oxides from exposed surfaces by descaling or grinding.

C. Fabricate components that, when assembled, have the following characteristics:

1. Profiles that are sharp, straight, and free of defects or deformations.
2. Accurately fitted joints with ends coped or mitered.
3. Physical and thermal isolation of glazing from framing members.
4. Accommodations for thermal and mechanical movements of glazing and framing to maintain required glazing edge clearances.

5. Provisions for field replacement of glazing from exterior.
6. Fasteners, anchors, and connection devices that are concealed from view to greatest extent possible.

D. Mechanically Glazed Framing Members: Fabricate for flush glazing without projecting stops.

E. Entrance Door Frames: Reinforce as required to support loads imposed by door operation and for installing entrance door hardware.

1. At interior and exterior doors, provide compression weather stripping at fixed stops.

F. Entrance Doors: Reinforce doors as required for installing entrance door hardware.

1. At pairs of exterior doors, provide sliding-type weather stripping retained in adjustable strip and mortised into door edge.
2. At exterior doors, provide weather sweeps applied to door bottoms.

G. Entrance Door Hardware Installation: Factory install entrance door hardware to the greatest extent possible. Cut, drill, and tap for factory-installed entrance door hardware before applying finishes.

H. After fabrication, clearly mark components to identify their locations in Project according to Shop Drawings.

2.9 ALUMINUM FINISHES

A. High-Performance Organic Finish: Two-coat fluoropolymer finish complying with AAMA 2605 and containing not less than 70 percent PVDF or FEVE resin by weight in color coat. Prepare, pretreat, and apply coating to exposed metal surfaces to comply with coating and resin manufacturers' written instructions.

1. Color: White, gloss as selected by Architect.

PART 3 - EXECUTION

3.1 EXAMINATION

A. Examine areas, with Installer present, for compliance with requirements for installation tolerances and other conditions affecting performance of the Work.

B. Proceed with installation only after unsatisfactory conditions have been corrected.

3.2 INSTALLATION

A. General:

1. Comply with manufacturer's written instructions.
2. Do not install damaged components.
3. Fit joints to produce hairline joints free of burrs and distortion.
4. Rigidly secure nonmovement joints.

5. Install anchors with separators and isolators to prevent metal corrosion and electrolytic deterioration and to prevent impeding movement of moving joints.
6. Seal perimeter and other joints watertight unless otherwise indicated.

B. Metal Protection:

1. Where aluminum is in contact with dissimilar metals, protect against galvanic action by painting contact surfaces with materials recommended by manufacturer for this purpose or installing nonconductive spacers.
2. Where aluminum is in contact with concrete or masonry, protect against corrosion by painting contact surfaces with bituminous paint.

C. Set continuous sill members and flashing in full sealant bed as specified in Section 079200 "Joint Sealants" to produce weathertight installation.

D. Install components plumb and true in alignment with established lines and grades.

E. Install glazing as specified in Section 088000 "Glazing."

F. Entrance Doors: Install doors to produce smooth operation and tight fit at contact points.

1. Exterior Doors: Install to produce weathertight enclosure and tight fit at weather stripping.

G. Erection Tolerances: Install aluminum-framed entrances and storefronts to comply with the following maximum tolerances:

1. Plumb: 1/8 inch in 10 feet; 1/4 inch in 40 feet.
2. Level: 1/8 inch in 20 feet; 1/4 inch in 40 feet.
3. Alignment:

a. Where surfaces abut in line or are separated by reveal or protruding element up to 1/2-inch-wide, limit offset from true alignment to 1/16 inch.
b. Where surfaces are separated by reveal or protruding element from 1/2 to 1 inch wide, limit offset from true alignment to 1/8 inch.
c. Where surfaces are separated by reveal or protruding element of 1-inch wide or more, limit offset from true alignment to 1/4 inch.

4. Location: Limit variation from plane to 1/8 inch in 12 feet; 1/2 inch over total length.

3.3 FIELD QUALITY CONTROL

A. Testing Agency: Engage a qualified testing agency to perform tests and inspections.

B. Field Quality-Control Testing: Perform the following test on aluminum-framed entrances.

1. Water-Spray Test: Before installation of interior finishes has begun, areas designated by Architect shall be tested according to AAMA 501.2 and shall not evidence water penetration.

a. Perform a minimum of three tests in areas as directed by Architect.

2. Air Infiltration: ASTM E 783 at 1.5 times the rate specified for laboratory testing in "Performance Requirements" Article but not more than 0.09 cfm/sq. ft. at a static-air-pressure differential of 1.57 lbf/sq. ft.

a. Perform a minimum of two tests in areas as directed by Architect.

3. Water Penetration: ASTM E 1105 at a minimum uniform and cyclic static-air-pressure differential of 0.67 times the static-air-pressure differential specified for laboratory testing in "Performance Requirements" Article, but not less than 6.24 lbf/sq. ft., and shall not evidence water penetration.

C. Aluminum-framed entrances will be considered defective if they do not pass tests and inspections.

D. Prepare test and inspection reports.

END OF SECTION

SECTION 085113

ALUMINUM WINDOWS

PART 1 - GENERAL

1.1 RELATED DOCUMENTS

A. Drawings and general provisions of the Contract, including General and Supplementary Conditions and Division 01 Specification Sections, apply to this Section.

1.2 SUMMARY

A. Section includes aluminum windows for exterior locations.

1.3 PREINSTALLATION MEETINGS

A. Preinstallation Conference: Conduct conference at Project site.

1. Review and finalize construction schedule and verify availability of materials, Installer's personnel, equipment, and facilities needed to make progress and avoid delays.
2. Review and discuss the finishing of aluminum windows that is required to be coordinated with the finishing of other aluminum work for color and finish matching.
3. Review, discuss, and coordinate the interrelationship of aluminum windows with other exterior wall components. Include provisions for anchorage, flashing, sealing perimeters, and protecting finishes.
4. Review and discuss the sequence of work required to construct a watertight and weathertight exterior building envelope.
5. Inspect and discuss the condition of substrate and other preparatory work performed by other trades.

1.4 ACTION SUBMITTALS

A. Product Data: For each type of product.

1. Include construction details, material descriptions, glazing and fabrication methods, dimensions of individual components and profiles, hardware, and finishes for aluminum windows.

B. Shop Drawings: For aluminum windows.

1. Include plans, elevations, sections, accessories, operational clearances and details of installation, including anchor, flashing, and sealant installation.

C. Samples for Initial Selection: For units with factory-applied color finishes.

D. Samples for Verification: For aluminum windows and components required, showing full range of color variations for finishes, and prepared on Samples of size indicated below:

1. Exposed Finishes: 2 by 4 inches.

E. Product Schedule: For aluminum windows. Use same designations indicated on Drawings.

1.5 INFORMATIONAL SUBMITTALS

A. Qualification Data: For manufacturer and Installer.

B. Product Test Reports: For each type of aluminum window, for tests performed by a qualified testing agency.

C. Field quality-control reports.

D. Sample Warranties: For manufacturer's warranties.

1.6 QUALITY ASSURANCE

A. Manufacturer Qualifications: A manufacturer capable of fabricating aluminum windows that meet or exceed performance requirements indicated and of documenting this performance by test reports, and calculations.

B. Installer Qualifications: An installer acceptable to aluminum window manufacturer for installation of units required for this Project.

C. Mockups: Build mockups to verify selections made under Sample submittals and to demonstrate aesthetic effects and set quality standards for materials and execution.

1. Build mockup of typical wall area as shown on Drawings, or otherwise indicated.
2. Approval of mockups does not constitute approval of deviations from the Contract Documents contained in mockups unless Architect specifically approves such deviations in writing.

1.7 WARRANTY

A. Manufacturer's Warranty: Manufacturer agrees to repair or replace aluminum windows that fail in materials or workmanship within specified warranty period.

1. Failures include, but are not limited to, the following:

a. Failure to meet performance requirements.
b. Structural failures including excessive deflection, water leakage, condensation, and air infiltration.
c. Deterioration of materials and finishes beyond normal weathering.
d. Failure of insulating glass.

2. Warranty Period:

a. Window: 10 years from date of Substantial Completion.
b. Glazing Units: 10 years from date of Substantial Completion.
c. Aluminum Finish: 15 years from date of Substantial Completion.

PART 2 - PRODUCTS

2.1 MANUFACTURERS

A. Source Limitations: Obtain aluminum windows from single source from single manufacturer.

2.2 WINDOW PERFORMANCE REQUIREMENTS

A. Product Standard: Comply with AAMA/WDMA/CSA 101/I.S.2/A440 for definitions and minimum standards of performance, materials, components, accessories, and fabrication unless more stringent requirements are indicated.

1. Window Certification: AMMA certified with label attached to each window.

B. Performance Class and Grade: AAMA/WDMA/CSA 101/I.S.2/A440 as follows:

1. Minimum Performance Class: As indicated.
2. Minimum Performance Grade: As indicated.

C. Thermal Movements: Provide aluminum windows, including anchorage, that allow for thermal movements resulting from the following maximum change (range) in ambient and surface temperatures by preventing buckling, opening of joints, overstressing of components, failure of joint sealants, failure of connections, and other detrimental effects. Base engineering calculation on surface temperatures of materials due to both solar heat gain and nighttime-sky heat loss.

1. Temperature Change: 120 deg F, ambient; 180 deg F material surfaces.

2.3 ALUMINUM WINDOWS

A. Basis-of-Design Product: Subject to compliance with requirements, provide EFCO Corporation; Series; 6711(T) or a comparable product by one of the following:

1. Kawneer North America.
2. Traco.

B. Operating Types: Provide the following operating types in locations indicated on Drawings:

1. Fixed.

C. Frames and Sashes: Aluminum extrusions complying with AAMA/WDMA/CSA 101/I.S.2/A440.

1. Thermally Improved Construction: Fabricate frames, sashes, and muntins with an integral, concealed, low-conductance thermal barrier located between exterior materials and window members exposed on interior side in a manner that eliminates direct metal-to-metal contact.

D. Insulating-Glass Units: ASTM E 2190, certified through IGCC as complying with requirements of IGCC.

1. Glass: ASTM C 1036, Type 1, Class 1, q3.

a. Tint: Clear.

b. Kind: Fully tempered where indicated on Drawings and where required by code.

2. Lites: Two.
3. Filling: Fill space between glass lites with air.
4. Low-E Coating: On #2 surface.

E. Glazing System: Manufacturer's standard factory-glazing system that produces weathertight seal.

F. Hardware, General: Provide manufacturer's standard hardware fabricated from aluminum, stainless steel, carbon steel complying with AAMA 907, or other corrosion-resistant material compatible with adjacent materials; designed to smoothly operate, tightly close, and securely lock windows, and sized to accommodate sash weight and dimensions.

1. Exposed Hardware Color and Finish: As selected by Architect from manufacturer's full range.

G. Weather Stripping: Provide full-perimeter weather stripping for each operable sash unless otherwise indicated.

H. Fasteners: Noncorrosive and compatible with window members, trim, anchors, and other components.

1. Exposed Fasteners: Do not use exposed fasteners to greatest extent possible. For application of hardware, use fasteners that match finish hardware being fastened.

2.4 ACCESSORIES

A. Dividers (False Muntins): Provide extruded-aluminum divider grilles in designs indicated for each sash lite.

1. Type: Permanently located between insulating-glass lites.
2. Pattern: As indicated on Drawings.
3. Profile: As selected by Architect from manufacturer's full range.

B. Subsills: Thermally broken, extruded-aluminum subsills in configurations indicated on Drawings; watertight.

C. Interior Trim: Extruded-aluminum profiles in sizes and configurations indicated on Drawings.

D. Panning Trim: Extruded-aluminum profiles in sizes and configurations indicated on Drawings.

E. Receptor System: Two-piece, snap-together, thermally broken, extruded-aluminum receptor system that anchors windows in place.

2.5 FABRICATION

A. Fabricate aluminum windows in sizes indicated. Include a complete system for assembling components and anchoring windows.

B. Glaze aluminum windows in the factory.

C. Weather strip each operable sash to provide weathertight installation.

D. Weep Holes: Provide weep holes and internal passages to conduct infiltrating water to exterior.

E. Mullions: Provide mullions and cover plates, matching window units, complete with anchors for support to structure and installation of window units. Allow for erection tolerances and provide for movement of window units due to thermal expansion and building deflections, as indicated. Provide mullions and cover plates capable of withstanding design wind loads of window units.

F. Complete fabrication, assembly, finishing, hardware application, and other work in the factory to greatest extent possible. Disassemble components only as necessary for shipment and installation.

2.6 GENERAL FINISH REQUIREMENTS

A. Comply with NAAMM's "Metal Finishes Manual" for recommendations for applying and designating finishes.

B. Protect mechanical finishes on exposed surfaces from damage by applying a strippable, temporary protective covering before shipping.

C. Appearance of Finished Work: Noticeable variations in same piece are not acceptable. Variations in appearance of adjoining components are acceptable if they are within the range of approved Samples and are assembled or installed to minimize contrast.

2.7 ALUMINUM FINISHES

A. High-Performance Organic Finish: Two-coat fluoropolymer finish complying with AAMA 2605 and containing not less than 70 percent PVDF or FEVE resin by weight in color coat. Prepare, pretreat, and apply coating to exposed metal surfaces to comply with coating and resin manufacturers' written instructions.

1. Color: White, gloss as selected by Architect.

PART 3 - EXECUTION

3.1 EXAMINATION

A. Examine openings, substrates, structural support, anchorage, and conditions, with Installer present, for compliance with requirements for installation tolerances and other conditions affecting performance of the Work.

B. Verify rough opening dimensions, levelness of sill plate, and operational clearances.

C. Examine wall flashings, vapor retarders, water and weather barriers, and other built-in components to ensure weathertight window installation.

D. Proceed with installation only after unsatisfactory conditions have been corrected.

3.2 INSTALLATION

A. Comply with manufacturer's written instructions for installing windows, accessories, and other components. For installation procedures and requirements not addressed in manufacturer's written instructions, comply with installation requirements in ASTM E 2112.

B. Install windows level, plumb, square, true to line, without distortion or impeding thermal movement, anchored securely in place to structural support, and in proper relation to wall flashing and other adjacent construction to produce weathertight construction.

C. Install windows and components to drain condensation, water penetrating joints, and moisture migrating within windows to the exterior.

D. Separate aluminum and other corrodible surfaces from sources of corrosion or electrolytic action at points of contact with other materials.

3.3 FIELD QUALITY CONTROL

A. Testing Agency: Engage a qualified testing agency to perform tests and inspections.
   1. Testing and inspecting agency will interpret tests and state in each report whether tested work complies with or deviates from requirements.

B. Testing Services: Testing and inspecting of installed windows shall take place as follows:

   1. Testing Methodology: Testing of windows for air infiltration and water resistance shall be performed according to AAMA 502, method B.
   2. Air-Infiltration Testing:

      a. Test Pressure: That required to determine compliance with AAMA/WDMA/CSA 101/I.S.2/A440 performance class indicated.
      b. Allowable Air-Leakage Rate: 1.5 times the applicable AAMA/WDMA/CSA 101/I.S.2/A440 rate for product type and performance class rounded down to one decimal place.

   3. Water-Resistance Testing:

      a. Test Pressure: Two-thirds times test pressure required to determine compliance with AAMA/WDMA/CSA 101/I.S.2/A440 performance grade indicated.
      b. Allowable Water Infiltration: No water penetration.

   4. Testing Extent: Three windows of each type as selected by Architect and a qualified independent testing and inspecting agency. Windows shall be tested after perimeter sealants have cured.
   5. Test Reports: Prepared according to AAMA 502.

C. Windows will be considered defective if they do not pass tests and inspections.

D. Prepare test and inspection reports.

3.4 ADJUSTING, CLEANING, AND PROTECTION

A. Clean exposed surfaces immediately after installing windows. Avoid damaging protective coatings and finishes. Remove excess sealants, glazing materials, dirt, and other substances.

1. Keep protective films and coverings in place until final cleaning.

B. Remove and replace glass that has been broken, chipped, cracked, abraded, or damaged during construction period.

C. Protect window surfaces from contact with contaminating substances resulting from construction operations. If contaminating substances do contact window surfaces, remove contaminants immediately according to manufacturer's written instructions.

END OF SECTION

SECTION 087100 – DOOR HARDWARE

PART 1 - GENERAL

1.1 SUMMARY

A. This Section includes commercial door hardware for the following:
   1. Swinging doors.
   2. Other doors to the extent indicated.

B. Door hardware includes, but is not necessarily limited to, the following:
   1. Mechanical door hardware.
   2. Electromechanical door hardware.
   3. Cylinders specified for doors in other sections.

C. Codes and References: Comply with the version year adopted by the Authority Having Jurisdiction.
   1. ANSI A117.1 - Accessible and Usable Buildings and Facilities.
   2. ICC/IBC - International Building Code.
   3. NFPA 70 - National Electrical Code.
   4. NFPA 80 - Fire Doors and Windows.
   5. NFPA 101 - Life Safety Code.
   6. NFPA 105 - Installation of Smoke Door Assemblies.
   7. State Building Codes, Local Amendments.

D. Standards: All hardware specified herein shall comply with the following industry standards:
   1. ANSI/BHMA Certified Product Standards - A156 Series
   2. UL10C – Positive Pressure Fire Tests of Door Assemblies

1.2 SUBMITTALS

A. Product Data: Manufacturer's product data sheets including installation details, material descriptions, dimensions of individual components and profiles, operational descriptions and finishes.

B. Door Hardware Schedule: Prepared by or under the supervision of supplier, detailing fabrication and assembly of door hardware, as well as procedures and diagrams. Coordinate the final Door Hardware Schedule with doors, frames, and related work to ensure proper size, thickness, hand, function, and finish of door hardware.
   1. Format: Comply with scheduling sequence and vertical format in DHI's "Sequence and Format for the Hardware Schedule."
   2. Organization: Organize the Door Hardware Schedule into door hardware sets indicating complete designations of every item required for each door or opening. Organize door hardware sets in same order as in the Door Hardware Sets at the end of Part 3. Submittals that do not follow the same format and order as the Door Hardware Sets will be rejected and subject to resubmission.
   3. Content: Include the following information:
      a. Type, style, function, size, label, hand, and finish of each door hardware item.
      b. Manufacturer of each item.
      c. Fastenings and other pertinent information.
      d. Location of door hardware set, cross-referenced to Drawings, both on floor plans and in door and frame schedule.
      e. Explanation of abbreviations, symbols, and codes contained in schedule.
      f. Mounting locations for door hardware.

g. Door and frame sizes and materials.
h. Warranty information for each product.

4. Submittal Sequence: Submit the final Door Hardware Schedule at earliest possible date, particularly where approval of the Door Hardware Schedule must precede fabrication of other work that is critical in the Project construction schedule. Include Product Data, Samples, Shop Drawings of other work affected by door hardware, and other information essential to the coordinated review of the Door Hardware Schedule.

C. Shop Drawings: Details of electrified access control hardware indicating the following:
1. Wiring Diagrams: Upon receipt of approved schedules, submit detailed system wiring diagrams for power, signaling, monitoring, communication, and control of the access control system electrified hardware. Differentiate between manufacturer-installed and field-installed wiring. Include the following:
a. Elevation diagram of each unique access controlled opening showing location and interconnection of major system components with respect to their placement in the respective door openings.
b. Complete (risers, point-to-point) access control system block wiring diagrams.
c. Wiring instructions for each electronic component scheduled herein.
2. Electrical Coordination: Coordinate with related sections the voltages and wiring details required at electrically controlled and operated hardware openings.

D. Proof of Certification: Provide copy of manufacturer(s) official certification or accreditation document indicating proof of status as a qualified and authorized provider of the primary Integrated Wiegand Access Control Products.

E. Keying Schedule: After a keying meeting with the owner has taken place prepare a separate keying schedule detailing final instructions. Submit the keying schedule in electronic format. Include keying system explanation, door numbers, key set symbols, hardware set numbers and special instructions. Owner must approve submitted keying schedule prior to the ordering of permanent cylinders/cores.

F. Informational Submittals:
1. Product Test Reports: Indicating compliance with cycle testing requirements, based on evaluation of comprehensive tests performed by manufacturer and witnessed by a qualified independent testing agency.

G. Operating and Maintenance Manuals: Provide manufacturers operating and maintenance manuals for each item comprising the complete door hardware installation in quantity as required in Division 01, Closeout Submittals.

1.3 QUALITY ASSURANCE

A. Manufacturers Qualifications: Engage qualified manufacturers with a minimum 5 years of documented experience in producing hardware and equipment similar to that indicated for this Project and that have a proven record of successful in-service performance.

B. Installer Qualifications: A minimum 3 years documented experience installing both standard and electrified door hardware similar in material, design, and extent to that indicated for this Project and whose work has resulted in construction with a record of successful in-service performance.

C. Door Hardware Supplier Qualifications: Experienced commercial door hardware distributors with a minimum 5 years documented experience supplying both mechanical and electromechanical hardware installations comparable in material, design, and extent to that indicated for this Project. Supplier recognized as a factory direct distributor by the manufacturers of the primary materials with a warehousing facility in Project's vicinity. Supplier to have on staff a certified Architectural Hardware Consultant (AHC) available during the course of the Work to consult with Contractor, Architect, and Owner concerning both standard and electromechanical door hardware and keying.

D. Integrated Wiegand, Wireless, and IP-Enabled Access Control Products Supplier Qualifications: Integrated access control products and accessories are required to be supplied and installed through current members of the ASSA ABLOY "Authorized Channel Partner" (ACP) and "Certified Integrator" (CI) programs. Suppliers are to be factory trained, certified prior to project bid, and a direct purchaser of the specified product. Installers are to be factory trained, certified prior to project bid, and are responsible for commissioning, servicing, and warranting the installed equipment specified for the project.

E. Source Limitations: Obtain each type and variety of door hardware specified in this section from a single source unless otherwise indicated.
   1. Electrified modifications or enhancements made to a source manufacturer's product line by a secondary or third party source will not be accepted.
   2. Provide electromechanical door hardware from the same manufacturer as mechanical door hardware, unless otherwise indicated.

F. Each unit to bear third party permanent label demonstrating compliance with the referenced standards.

G. Keying Conference: Conduct conference to comply with requirements in Division 01 Section "Project Meetings." Keying conference to incorporate the following criteria into the final keying schedule document:
   1. Function of building, purpose of each area and degree of security required.
   2. Plans for existing and future key system expansion.
   3. Requirements for key control storage and software.
   4. Installation of permanent keys, cylinder cores and software.
   5. Address and requirements for delivery of keys.

H. Pre-Submittal Conference: Conduct coordination conference in compliance with requirements in Division 01 Section "Project Meetings" with attendance by representatives of Supplier(s), Installer(s), and Contractor(s) to review proper methods and the procedures for receiving, handling, and installing door hardware.
   1. Prior to installation of door hardware, conduct a project specific training meeting to instruct the installing contractors' personnel on the proper installation and adjustment of their respective products. Product training to be attended by installers of door hardware (including electromechanical hardware) for aluminum, hollow metal and wood doors. Training will include the use of installation manuals, hardware schedules, templates and physical product samples as required.
   2. Inspect and discuss electrical roughing-in, power supply connections, and other preparatory work performed by other trades.
   3. Review sequence of operation narratives for each unique access controlled opening.
   4. Review and finalize construction schedule and verify availability of materials.
   5. Review the required inspecting, testing, commissioning, and demonstration procedures

I. At completion of installation, provide written documentation that components were applied to manufacturer's instructions and recommendations and according to approved schedule.

1.4 DELIVERY, STORAGE, AND HANDLING

A. Inventory door hardware on receipt and provide secure lock-up and shelving for door hardware delivered to Project site. Do not store electronic access control hardware, software or accessories at Project site without prior authorization.

B. Tag each item or package separately with identification related to the final Door Hardware Schedule, and include basic installation instructions with each item or package.

C. Deliver, as applicable, permanent keys, cylinders, cores, access control credentials, software and related accessories directly to Owner via registered mail or overnight package service. Instructions for delivery to the Owner shall be established at the "Keying Conference".

1.5 COORDINATION

A. Templates: Obtain and distribute to the parties involved templates for doors, frames, and other work specified to be factory prepared for installing standard and electrified hardware. Check Shop Drawings of other work to confirm that adequate provisions are made for locating and installing hardware to comply with indicated requirements.

B. Door Hardware and Electrical Connections: Coordinate the layout and installation of scheduled electrified door hardware and related access control equipment with required connections to source power junction boxes, low voltage power supplies, detection and monitoring hardware, and fire and detection alarm systems.

C. Door and Frame Preparation: Doors and corresponding frames are to be prepared, reinforced and pre-wired (if applicable) to receive the installation of the specified electrified, monitoring, signaling and access control system hardware without additional in-field modifications.

1.6 WARRANTY

A. General Warranty: Reference Division 01, General Requirements. Special warranties specified in this Article shall not deprive Owner of other rights Owner may have under other provisions of the Contract Documents and shall be in addition to, and run concurrent with, other warranties made by Contractor under requirements of the Contract Documents.

B. Warranty Period: Written warranty, executed by manufacturer(s), agreeing to repair or replace components of standard and electrified door hardware that fails in materials or workmanship within specified warranty period after final acceptance by the Owner. Failures include, but are not limited to, the following:
   1. Structural failures including excessive deflection, cracking, or breakage.
   2. Faulty operation of the hardware.
   3. Deterioration of metals, metal finishes, and other materials beyond normal weathering.
   4. Electrical component defects and failures within the systems operation.

C. Standard Warranty Period: One year from date of Substantial Completion, unless otherwise indicated.

D. Special Warranty Periods:
   1. Twenty five years for manual surface door closer bodies.

1.7 MAINTENANCE SERVICE

A. Maintenance Tools and Instructions: Furnish a complete set of specialized tools and maintenance instructions as needed for Owner's continued adjustment, maintenance, and removal and replacement of door hardware.

PART 2 - PRODUCTS

2.1 SCHEDULED DOOR HARDWARE

A. General: Provide door hardware for each door to comply with requirements in Door Hardware Sets and each referenced section that products are to be supplied under.

B. Designations: Requirements for quantity, item, size, finish or color, grade, function, and other distinctive qualities of each type of door hardware are indicated in the Door Hardware Sets at the end of Part 3. Products are identified by using door hardware designations, as follows:

C. Named Manufacturer's Products: Product designation and manufacturer are listed for each door hardware type required for the purpose of establishing requirements. Manufacturers' names are abbreviated in the Door Hardware Schedule.

D. Products furnished, but not installed, under this Section include the following. Coordinating, purchasing, delivering, and scheduling remain requirements of this Section.
   1. Permanent cylinders, cores, and keys to be installed by Owner.

E. Substitutions: Requests for substitution and product approval for inclusive mechanical and electromechanical door hardware in compliance with the specifications must be submitted in writing and in accordance with the procedures and time frames outlined in Division 01, Substitution Procedures. Approval of requests is at the discretion of the architect, owner, and their designated consultants.

2.2 HANGING DEVICES

A. Hinges: ANSI/BHMA A156.1 certified butt hinges with number of hinge knuckles as specified in the Door Hardware Sets.
   1. Quantity: Provide the following hinge quantity, unless otherwise indicated:
      a. Two Hinges: For doors with heights up to 60 inches.
      b. Three Hinges: For doors with heights 61 to 90 inches.
      c. Four Hinges: For doors with heights 91 to 120 inches.
      d. For doors with heights more than 120 inches, provide 4 hinges, plus 1 hinge for every 30 inches of door height greater than 120 inches.
   2. Hinge Size: Provide the following, unless otherwise indicated, with hinge widths sized for door thickness and clearances required:
      a. Widths up to 3’0”: 4-1/2” standard or heavy weight as specified.
      b. Sizes from 3’1” to 4’0”: 5” standard or heavy weight as specified.
   3. Hinge Options: Comply with the following where indicated in the Hardware Sets or on Drawings:
      a. Non-removable Pins: Provide set screw in hinge barrel that, when tightened into a groove in hinge pin, prevents removal of pin while door is closed; for the all out-swinging lockable doors.
   4. Acceptable Manufacturers:
      a. Hager Companies (HA).
      b. McKinney Products (MK).

B. Continuous Geared Hinges: ANSI/BHMA A156.26 Grade 1-600 certified continuous geared hinge. with minimum 0.120-inch thick extruded 6060 T6 aluminum alloy hinge leaves and a minimum overall width of 4 inches. Hinges are non-handed, reversible and fabricated to template screw locations. Factory trim hinges to suit door height and prepare for electrical cut-outs.
   1. Acceptable Manufacturers:
      a. Bommer Industries (BO).
      b. McKinney Products (MK).
      c. Pemko Manufacturing (PE).

C. Pin and Barrel Continuous Hinges: ANSI/BHMA A156.26 Grade 1-600 certified pin and barrel continuous hinges with minimum 14 gauge Type 304 stainless steel hinge leaves, concealed teflon coated stainless pin, and twin self lubricated nylon bearings at each knuckle separation. Factory trim hinges to suit door height and prepare for electrical cut-outs.
   1. Acceptable Manufacturers:
      a. Markar Products (MR).
      b. McKinney Products (MK).
      c. Pemko Manufacturing (PE).

2.3 POWER TRANSFER DEVICES

A. Electrified Quick Connect Transfer Hinges: Provide electrified transfer hinges with Molex™ standardized plug connectors and sufficient number of concealed wires (up to 12) to accommodate the electrified functions specified in the Door Hardware Sets. Connectors plug directly to through-door wiring harnesses for connection to electric locking devices and power supplies. Wire nut connections are not acceptable.
   1. Acceptable Manufacturers:
      a. Hager Companies (HA) - ETW-QC (# wires) Option.
      b. McKinney Products (MK) - QC (# wires) Option.

B. Concealed Quick Connect Electric Power Transfers: Provide concealed wiring pathway housing mortised into the door and frame for low voltage electrified door hardware. Furnish with Molex™ standardized plug connectors and sufficient number of concealed wires (up to 12) to accommodate the electrified functions specified in the Door Hardware Sets. Connectors plug directly to through-door wiring harnesses for connection to electric locking devices and power supplies. Wire nut connections are not acceptable.
   1. Acceptable Manufacturers:
      a. Pemko Manufacturing (PE) – EL-CEPT Series.
      b. Securitron (SU) - EL-CEPT Series.
      c. Von Duprin (VD) - EPT-10 Series.

C. Electric Door Wire Harnesses: Provide electric/data transfer wiring harnesses with standardized plug connectors to accommodate up to twelve (12) wires. Connectors plug directly to through-door wiring harnesses for connection to electric locking devices and power supplies. Provide sufficient number and type of concealed wires to accommodate electric function of specified hardware. Provide a connector for through-door electronic locking devices and from hinge to junction box above the opening. Wire nut connections are not acceptable. Determine the length required for each electrified hardware component for the door type, size and construction, minimum of two per electrified opening.
   1. Provide one each of the following tools as part of the base bid contract:
      a. McKinney Products (MK) - Electrical Connecting Kit: QC-R001.
      b. McKinney Products (MK) - Connector Hand Tool: QC-R003.
   2. Acceptable Manufacturers:
      a. McKinney Products (MK) – QC-C Series.

2.4 DOOR OPERATING TRIM

A. Flush Bolts and Surface Bolts: ANSI/BHMA A156.3 and A156.16, Grade 1, certified.
   1. Flush bolts to be furnished with top rod of sufficient length to allow bolt retraction device location approximately six feet from the floor.
   2. Furnish dust proof strikes for bottom bolts.
   3. Surface bolts to be minimum 8” in length and U.L. listed for labeled fire doors and U.L. listed for windstorm components where applicable.
   4. Provide related accessories (mounting brackets, strikes, coordinators, etc.) as required for appropriate installation and operation.
   5. Acceptable Manufacturers:
      a. Door Controls International (DC).
      b. Rockwood Manufacturing (RO).
      c. Trimco (TC).

B. Door Push Plates and Pulls: ANSI/BHMA A156.6 certified door pushes and pulls of type and design specified in the Hardware Sets. Coordinate and provide proper width and height as required where conflicting hardware dictates.
   1. Push/Pull Plates: Minimum .050 inch thick, size as indicated in hardware sets, with beveled edges, secured with exposed screws unless otherwise indicated.
   2. Door Pull and Push Bar Design: Size, shape, and material as indicated in the hardware sets. Minimum clearance of 2 1/2-inches from face of door unless otherwise indicated.

3. Offset Pull Design: Size, shape, and material as indicated in the hardware sets. Minimum clearance of 2 1/2-inches from face of door and offset of 90 degrees unless otherwise indicated.
4. Fasteners: Provide manufacturer's designated fastener type as indicated in Hardware Sets.
5. Acceptable Manufacturers:
   a. Hiawatha, Inc. (HI).
   b. Rockwood Manufacturing (RO).
   c. Trimco (TC).

2.5 CYLINDERS AND KEYING

A. General: Cylinder manufacturer to have minimum (10) years experience designing secured master key systems and have on record a published security keying system policy.

B. Source Limitations: Obtain each type of keyed cylinder and keys from the same source manufacturer as locksets and exit devices, unless otherwise indicated.

C. Cylinders: Original manufacturer cylinders complying with the following:
1. Mortise Type: Threaded cylinders with rings and cams to suit hardware application.
2. Rim Type: Cylinders with back plate, flat-type vertical or horizontal tailpiece, and raised trim ring.
3. Bored-Lock Type: Cylinders with tailpieces to suit locks.
4. Mortise and rim cylinder collars to be solid and recessed to allow the cylinder face to be flush and be free spinning with matching finishes.
5. Keyway: Match Facility Restricted Keyway.

D. Permanent Cores: Manufacturer's standard; finish face to match lockset; complying with the following:
1. Removable Cores: Core insert, removable by use of a special key, and for use with only the core manufacturer's cylinder and door hardware. Provide removable core (small or large format) as specified in Hardware Sets.

E. Security Cylinders: ANSI/BHMA A156.5, Grade 1, patterned security cylinders and keys able to be used together under the same facility master or grandmaster key system. Cylinders are to be factory keyed.
1. Acceptable Manufacturers:
   a. Corbin Russwin (RU) - Pyramid PS Series.
   b. No Substitution.

F. Keying System: Each type of lock and cylinders to be factory keyed.
1. Conduct specified "Keying Conference" to define and document keying system instructions and requirements.
2. Furnish factory cut, nickel-silver large bow permanently inscribed with a visual key control number as directed by Owner.
3. Existing System: Key locks to Owner's existing system.

G. Key Quantity: Provide the following minimum number of keys:
1. Change Keys per Cylinder: Two (3)
2. Master Keys: Ten (10) top master, Five (3) of each lower master.
3. Construction Keys (where required): Ten (10).
4. Construction Control Keys (where required): Two (2).

H. Construction Keying: Provide temporary keyed construction cores.

I. Key Registration List (Bitting List):
1. Provide keying transcript list to Owner's representative in the proper format for importing into key control software.

2. Provide transcript list in writing or electronic file as directed by the Owner.

J. Key Control Cabinet: Provide a key control system including envelopes, labels, and tags with self-locking key clips, receipt forms, 3-way visible card index, temporary markers, permanent markers, and standard metal cabinet. Key control cabinet shall have expansion capacity of 150% of the number of locks required for the project.
1. Acceptable Manufacturers:
a. Lund Equipment (LU).
b. MMF Industries (MM).
c. Telkee (TK).

K. Key Control Software: Provide one network version of "Key Wizard" branded key management software package that includes one year of technical support and upgrades to software at no charge. Provide factory key system formatted for importing into “Key Wizard” software.

2.6 MECHANICAL LOCKS AND LATCHING DEVICES

A. Mortise Locksets, Grade 1 (Heavy Duty): ANSI/BHMA A156.13, Series 1000, Operational Grade 1 certified. Locksets are to be manufactured with a corrosion resistant steel case and be field-reversible for handing without disassembly of the lock body.
1. Acceptable Manufacturers:
a. Corbin Russwin Hardware (RU) – ML2000 Series.
b. Sargent Manufacturing (SA) – 8200 Series.
c. Schlage (SC) – L9000 Series.

B. Cylindrical Locksets, Grade 1 (Heavy Duty): ANSI/BHMA A156.2, Series 4000, Grade 1 certified.
1. Furnish with solid cast levers, standard 2 3/4” backset, and 1/2" (3/4" at rated paired openings) throw brass or stainless steel latchbolt.
2. Locks are to be non-handed and fully field reversible.
3. Acceptable Manufacturers:
a. Corbin Russwin Hardware (RU) – CL3300 Series.
b. Sargent Manufacturing (SA) – 10 Line.
c. Schlage (SC) – ND Series.

2.7 INTEGRATED WIEGAND OUTPUT LOCKING DEVICES – MULTI-CLASS READER

A. Integrated Wiegand Output Multi-Class Mortise Locks: Wiegand output ANSI A156.13, Grade 1, mortise lockset with integrated card reader, request-to-exit signaling, door position status switch, and latchbolt monitoring in one complete unit. Hard wired, solenoid driven locking/unlocking control of the lever handle trim, 3/4" deadlocking anti-friction latch, and 1" case-hardened steel deadbolt. Lock is U.L listed and labeled for use on up to 3 hour fire rated openings. Available with or without keyed high security cylinder override.
1. Open architecture, hard wired platform supports centralized control of locking units with new or existing Wiegand compatible access control systems. Latchbolt monitoring and door position switch act in conjunction to report door-in-frame (DPS) and door latched (door closed and latched) conditions.
2. Integrated reader supports the following credentials:
a. 125kHz proximity credentials: HID, AWID, Indala, and EM4102.
b. 13.56 MHz proximity credentials: HID iClass, HID iClass SE, SE for MIFARE Classic, DESFire EV1.
3. 12VDC external power supply required for reader and lock, with optional 24VDC lock solenoid. Fail safe or fail secure options.
4. Energy Efficient Design: Provide lock bodies which have a holding current draw of 15mA maximum, and can operate on either 12 or 24 volts. Locks are to be field configurable for fail safe or fail secure operation.

5. Installation requires only one cable run from the lock to the access control panel without requirements for additional proprietary lock panel interface boards or modules.
6. Installation to include manufacturer's access control panel interface board or module where required for Wiegand output protocol.
7. Acceptable Manufacturers:
   a. Corbin Russwin (RU) – ML2000 SE-LP10 Series.
   b. Sargent Manufacturing (SA) – M1 8200 Series.

2.8 AUXILIARY LOCKS

A. Mortise Deadlocks, Small Case: ANSI/BHMA A156.36, Grade 1, small case mortise type deadlocks constructed of heavy gauge wrought corrosion resistant steel. Steel or stainless steel bolts with a 1" throw and hardened steel roller pins. Deadlocks to be products of the same source manufacturer and keyway as other specified locksets.
   1. Acceptable Manufacturers:
      a. Corbin Russwin Hardware (RU) - DL4100 Series.
      b. Sargent Manufacturing (SA) - 4870 Series.
      c. Schlage (SC) - L460 Series.

2.9 LOCK AND LATCH STRIKES

A. Strikes: Provide manufacturer's standard strike with strike box for each latch or lock bolt, with curved lip extended to protect frame, finished to match door hardware set, unless otherwise indicated, and as follows:
   1. Flat-Lip Strikes: For locks with three-piece antifriction latchbolts, as recommended by manufacturer.
   2. Extra-Long-Lip Strikes: For locks used on frames with applied wood casing trim.
   3. Aluminum-Frame Strike Box: Provide manufacturer's special strike box fabricated for aluminum framing.
   4. Double-lipped strikes: For locks at double acting doors. Furnish with retractable stop for rescue hardware applications.

B. Standards: Comply with the following:
   1. Strikes for Mortise Locks and Latches: BHMA A156.13.
   2. Strikes for Bored Locks and Latches: BHMA A156.2.
   3. Strikes for Auxiliary Deadlocks: BHMA A156.36.
   4. Dustproof Strikes: BHMA A156.16.

2.10 CONVENTIONAL EXIT DEVICES

A. General Requirements: All exit devices specified herein shall meet or exceed the following criteria:
   1. At doors not requiring a fire rating, provide devices complying with NFPA 101 and listed and labeled for "Panic Hardware" according to UL305. Provide proper fasteners as required by manufacturer including sex nuts and bolts at openings specified in the Hardware Sets.
   2. Where exit devices are required on fire rated doors, provide devices complying with NFPA 80 and with UL labeling indicating "Fire Exit Hardware". Provide devices with the proper fasteners for installation as tested and listed by UL. Consult manufacturer’s catalog and template book for specific requirements.
   3. Except on fire rated doors, provide exit devices with hex key dogging device to hold the pushbar and latch in a retracted position. Provide optional keyed cylinder dogging on devices where specified in Hardware Sets.
   4. Devices must fit flat against the door face with no gap that permits unauthorized dogging of the push bar. The addition of filler strips is required in any case where the door light extends behind the device as in a full glass configuration.

5. Electromechanical Options: Subject to same compliance standards and requirements as mechanical exit devices, electrified devices to be of type and design as specified in hardware sets. Include any specific controllers when conventional power supplies are not sufficient to provide the proper inrush current.
6. Motorized Electric Latch Retraction: Devices with an electric latch retraction feature must use motors which have a maximum current draw of 600mA. Solenoid driven latch retraction is not acceptable.
7. Lever Operating Trim: Where exit devices require lever trim, furnish manufacturer's heavy duty escutcheon trim with threaded studs for thru-bolts.
   a. Lock Trim Design: As indicated in Hardware Sets, provide finishes and designs to match that of the specified locksets.
   b. Where function of exit device requires a cylinder, provide a cylinder (Rim or Mortise) as specified in Hardware Sets.
8. Vertical Rod Exit Devices: Where surface or concealed vertical rod exit devices are used at interior openings, provide as less bottom rod (LBR) unless otherwise indicated. Provide dust proof strikes where thermal pins are required to project into the floor.
9. Narrow Stile Applications: At doors constructed with narrow stiles, or as specified in Hardware Sets, provide devices designed for maximum 2” wide stiles.
10. Rail Sizing: Provide exit device rails factory sized for proper door width application.
11. Through Bolt Installation: For exit devices and trim as indicated in Door Hardware Sets.

B. Conventional Push Rail Exit Devices (Heavy Duty): ANSI/BHMA A156.3, Grade 1 certified panic and fire exit hardware devices furnished in the functions specified in the Hardware Sets. Exit device latch to be stainless steel, pullman type, with deadlock feature.
   1. Acceptable Manufacturers:
      a. Corbin Russwin Hardware (RU) - ED4000 / ED5000 Series.
      b. Sargent Manufacturing (SA) - 80 Series.
      c. Von Duprin (VD) - 35A/98 XP Series.

2.11 INTEGRATED WIEGAND OUTPUT EXIT DEVICES – MULTI-CLASS READER

A. Integrated Wiegand Output Multi-Class Exit Hardware: Wiegand output ANSI 156.3 Grade 1 rim, mortise, and vertical rod exit device hardware with integrated proximity card reader, latchbolt and touchbar monitoring, and request-to-exit signaling, in one complete unit. Hard wired, solenoid driven locking/unlocking control of the lever handle exit trim with 3/4" throw latch bolt. U.L listed and labeled for either panic or "fire exit hardware" for use on up to 3 hour fire rated openings. Available with or without keyed high security cylinder override.
   1. Open architecture, hard wired platform supports centralized control of locking units with new or existing Wiegand compatible access control systems. Inside push bar (request-to-exit) signaling and door position (open/closed status) monitoring (via separately connected DPS).
   2. Integrated reader supports the following credentials:
      a. 125kHz proximity credentials: HID, AWID, Indala, and EM4102.
      b. 13.56 MHz proximity credentials: HID iClass, HID iClass SE, SE for MIFARE Classic, DESFire EV1.
   3. 12VDC external power supply required for reader. 24VDC required for solenoid operated exit trim. Fail safe or fail secure options.
   4. Installation requires only one cable run from the exit hardware to the access control panel without requirements for additional proprietary lock panel interface boards or modules.
   5. Competitor Alternates Allowed Option>Installation to include manufacturer's access control panel interface board or module where required for Wiegand output protocol.
   6. Acceptable Manufacturers:
      a. Corbin Russwin (RU) – ED5000 SE-LP10 Series.
      b. Sargent Manufacturing (SA) – M1 80 Series.

B. Tube Steel Removable Mullions: ANSI/BHMA A156.3 removable steel mullions with malleable-iron top and bottom retainers and a primed paint finish.
   1. Provide keyed removable feature where specified in the Hardware Sets.

2. Provide stabilizers and mounting brackets as required.
3. Provide electrical quick connection wiring options as specified in the hardware sets.
4. Acceptable Manufacturers:
   a. Corbin Russwin Hardware (RU) - 700/900 Series.
   b. Sargent Manufacturing (SA) - 980S Series.
   c. Von Duprin (VD) - 9954 Series.

2.12 DOOR CLOSERS

A. All door closers specified herein shall meet or exceed the following criteria:
   1. General: Door closers to be from one manufacturer, matching in design and style, with the same type door preparations and templates regardless of application or spring size. Closers to be non-handed with full sized covers including installation and adjusting information on inside of cover.
   2. Standards: Closers to comply with UL-10C for Positive Pressure Fire Test and be U.L. listed for use of fire rated doors.
   3. Cycle Testing: Provide closers which have surpassed 15 million cycles in a test witnessed and verified by UL.
   4. Size of Units: Comply with manufacturer's written recommendations for sizing of door closers depending on size of door, exposure to weather, and anticipated frequency of use. Where closers are indicated for doors required to be accessible to the physically handicapped, provide units complying with ANSI ICC/A117.1.
   5. Closer Arms: Provide heavy duty, forged steel closer arms unless otherwise indicated in Hardware Sets.
   6. Closers shall not be installed on exterior or corridor side of doors; where possible install closers on door for optimum aesthetics.
   7. Closer Accessories: Provide door closer accessories including custom templates, special mounting brackets, spacers and drop plates as required for proper installation. Provide through-bolt and security type fasteners as specified in the hardware sets.

B. Door Closers, Surface Mounted (Heavy Duty): ANSI/BHMA A156.4, Grade 1 surface mounted, heavy duty door closers with complete spring power adjustment, sizes 1 thru 6; and fully operational adjustable according to door size, frequency of use, and opening force. Closers to be rack and pinion type, one piece cast iron or aluminum alloy body construction, with adjustable backcheck and separate non-critical valves for closing sweep and latch speed control. Provide non-handed units standard.
   1. Acceptable Manufacturers:
      a. Corbin Russwin Hardware (RU) – DC6000 Series.
      b. Sargent Manufacturing (SA) - 351 Series.
      c. Norton Door Controls (NO) - 7500 Series.

2.13 ARCHITECTURAL TRIM

A. Door Protective Trim
   1. General: Door protective trim units to be of type and design as specified below or in the Hardware Sets.
   2. Size: Fabricate protection plates (kick, armor, or mop) not more than 2" less than door width (LDW) on stop side of single doors and 1” LDW on stop side of pairs of doors, and not more than 1" less than door width on pull side. Coordinate and provide proper width and height as required where conflicting hardware dictates. Height to be as specified in the Hardware Sets.
   3. Where plates are applied to fire rated doors with the top of the plate more than 16” above the bottom of the door, provide plates complying with NFPA 80. Consult manufacturer’s catalog and template book for specific requirements for size and applications.
   4. Protection Plates: ANSI/BHMA A156.6 certified protection plates (kick, armor, or mop), fabricated from the following:
      a. Stainless Steel: 300 grade, 050-inch thick.

5. Options and fasteners: Provide manufacturer's designated fastener type as specified in the Hardware Sets. Provide countersunk screw holes.
6. Acceptable Manufacturers:
   a. Hiawatha, Inc. (HI).
   b. Rockwood Manufacturing (RO).
   c. Trimco (TC).

2.14 DOOR STOPS AND HOLDERS

A. General: Door stops and holders to be of type and design as specified below or in the Hardware Sets.

B. Door Stops and Bumpers: ANSI/BHMA A156.16, Grade 1 certified door stops and wall bumpers. Provide wall bumpers, either convex or concave types with anchorage as indicated, unless floor or other types of door stops are specified in Hardware Sets. Do not mount floor stops where they will impede traffic. Where floor or wall bumpers are not appropriate, provide overhead type stops and holders.
   1. Acceptable Manufacturers:
      a. Hiawatha, Inc. (HI).
      b. Rockwood Manufacturing (RO).
      c. Trimco (TC).

C. Overhead Door Stops and Holders: ANSI/BHMA A156.6, Grade 1 certified overhead stops and holders to be surface or concealed types as indicated in Hardware Sets. Track, slide, arm and jamb bracket to be constructed of extruded bronze and shock absorber spring of heavy tempered steel. Provide non-handed design with mounting brackets as required for proper operation and function.
   1. Acceptable Manufacturers:
      a. Rixson Door Controls (RF).
      b. Rockwood Manufacturing (RO).
      c. Sargent Manufacturing (SA).

2.15 ARCHITECTURAL SEALS

A. General: Thresholds, weatherstripping, and gasket seals to be of type and design as specified below or in the Hardware Sets. Provide continuous weatherstrip gasketing on exterior doors and provide smoke, light, or sound gasketing on interior doors where indicated. At exterior applications provide non-corrosive fasteners and elsewhere where indicated.

B. Smoke Labeled Gasketing: Assemblies complying with NFPA 105 that are listed and labeled by a testing and inspecting agency acceptable to authorities having jurisdiction, for smoke control ratings indicated, based on testing according to UL 1784.
   1. Provide smoke labeled perimeter gasketing at all smoke labeled openings.

C. Fire Labeled Gasketing: Assemblies complying with NFPA 80 that are listed and labeled by a testing and inspecting agency acceptable to authorities having jurisdiction, for fire ratings indicated, based on testing according to UL-10C.
   1. Provide intumescent seals as indicated to meet UL10C Standard for Positive Pressure Fire Tests of Door Assemblies, and NPFA 252, Standard Methods of Fire Tests of Door Assemblies.

D. Sound-Rated Gasketing: Assemblies that are listed and labeled by a testing and inspecting agency, for sound ratings indicated.

E. Replaceable Seal Strips: Provide only those units where resilient or flexible seal strips are easily replaceable and readily available from stocks maintained by manufacturer.

F. Acceptable Manufacturers:
   1. National Guard Products (NG).
   2. Pemko Manufacturing (PE).
   3. Reese Enterprises, Inc. (RE).

2.16 ELECTRONIC ACCESSORIES

A. Power Supplies: Provide Nationally Recognized Testing Laboratory Listed 12VDC or 24VDC (field selectable) filtered and regulated power supplies. Include battery backup option with integral battery charging capability in addition to operating the DC load in event of line voltage failure. Provide the least number of units, at the appropriate amperage level, sufficient to exceed the required total draw for the specified electrified hardware and access control equipment.
   1. Acceptable Manufacturers:
      a. Corbin Russwin Hardware (RU) – 782.
      b. Sargent Manufacturing (SA) – 3500 Series.
      c. Securitron (SU) - BPS Series.
      d. Von Duprin (VD) - PS.

2.17 FABRICATION

A. Fasteners: Provide door hardware manufactured to comply with published templates generally prepared for machine, wood, and sheet metal screws. Provide screws according to manufacturers recognized installation standards for application intended.

2.18 FINISHES

A. Standard: Designations used in the Hardware Sets and elsewhere indicate hardware finishes complying with ANSI/BHMA A156.18, including coordination with traditional U.S. finishes indicated by certain manufacturers for their products.

B. Provide quality of finish, including thickness of plating or coating (if any), composition, hardness, and other qualities complying with manufacturer's standards, but in no case less than specified by referenced standards for the applicable units of hardware

C. Protect mechanical finishes on exposed surfaces from damage by applying a strippable, temporary protective covering before shipping.

PART 3 - EXECUTION

3.1 EXAMINATION

A. Examine scheduled openings, with Installer present, for compliance with requirements for installation tolerances, labeled fire door assembly construction, wall and floor construction, and other conditions affecting performance.

B. Notify architect of any discrepancies or conflicts between the door schedule, door types, drawings and scheduled hardware. Proceed only after such discrepancies or conflicts have been resolved in writing.

3.2 PREPARATION

A. Hollow Metal Doors and Frames: Comply with ANSI/DHI A115 series.

B. Wood Doors: Comply with ANSI/DHI A115-W series.

3.3 INSTALLATION

A. Install each item of mechanical and electromechanical hardware and access control equipment to comply with manufacturer's written instructions and according to specifications.
   1. Installers are to be trained and certified by the manufacturer on the proper installation and adjustment of fire, life safety, and security products including: hanging devices; locking devices; closing devices; and seals.

B. Mounting Heights: Mount door hardware units at heights indicated in following applicable publications, unless specifically indicated or required to comply with governing regulations:
   1. Standard Steel Doors and Frames: DHI's "Recommended Locations for Architectural Hardware for Standard Steel Doors and Frames."
   2. Wood Doors: DHI WDHS.3, "Recommended Locations for Architectural Hardware for Wood Flush Doors."
   3. Where indicated to comply with accessibility requirements, comply with ANSI A117.1 "Accessibility Guidelines for Buildings and Facilities."
   4. Provide blocking in drywall partitions where wall stops or other wall mounted hardware is located.

C. Integrated Wiegand access control products are required to be installed through current members of the ASSA ABLOY "Certified Integrator" (CI) program.

D. Retrofitting: Install door hardware to comply with manufacturer's published templates and written instructions. Where cutting and fitting are required to install door hardware onto or into surfaces that are later to be painted or finished in another way, coordinate removal, storage, and reinstallation of surface protective trim units with finishing work specified in Division 9 Sections. Do not install surface-mounted items until finishes have been completed on substrates involved.

E. Thresholds: Set thresholds for exterior and acoustical doors in full bed of sealant complying with requirements specified in Division 7 Section "Joint Sealants."

F. Storage: Provide a secure lock up for hardware delivered to the project but not yet installed. Control the handling and installation of hardware items so that the completion of the work will not be delayed by hardware losses before and after installation.

3.4 FIELD QUALITY CONTROL

A. Field Inspection: Supplier will perform a final inspection of installed door hardware and state in report whether work complies with or deviates from requirements, including whether door hardware is properly installed, operating and adjusted.

3.5 ADJUSTING

A. Initial Adjustment: Adjust and check each operating item of door hardware and each door to ensure proper operation or function of every unit. Replace units that cannot be adjusted to operate as intended. Adjust door control devices to compensate for final operation of heating and ventilating equipment and to comply with referenced accessibility requirements.

3.6 CLEANING AND PROTECTION

A. Protect all hardware stored on construction site in a covered and dry place. Protect exposed hardware installed on doors during the construction phase. Install any and all hardware at the latest possible time frame.

B. Clean adjacent surfaces soiled by door hardware installation.

C. Clean operating items as necessary to restore proper finish. Provide final protection and maintain conditions that ensure door hardware is without damage or deterioration at time of owner occupancy.

3.7 DEMONSTRATION

A. Instruct Owner's maintenance personnel to adjust, operate, and maintain mechanical and electromechanical door hardware.

3.8 DOOR HARDWARE SETS

A. The hardware sets represent the design intent and direction of the owner and architect. They are a guideline only and should not be considered a detailed hardware schedule. Discrepancies, conflicting hardware and missing items should be brought to the attention of the architect with corrections made prior to the bidding process. Omitted items not included in a hardware set should be scheduled with the appropriate additional hardware required for proper application and functionality.

B. Manufacturer’s Abbreviations:
1. MK - McKinney
2. PE - Pemko
3. MR - Markar
4. RO - Rockwood
5. SA - Sargent
6. RU - Corbin Russwin
7. SU - Securitron
8. RF - Rixson
9. NO - Norton

Hardware Sets

Set: 1.0

Doors: B128A, C119A, C123B, C123C, EXC004, EXC011

0	All Hardware	BY DOOR SUPPLIER		OT

Set: 2.0

Doors: EXB102, EXC002

2	Continuous Hinge	CFM__SLF-HD1 PT - DOOR HEIGHT		PE
1	Removable Mullion	L980A	US28	SA
2	Rim Exit Device	LC 16 55 56 8810 862	US32D	SA
3	Cylinder (mortise)	1080 CT6R - LENGTH/CAM TO SUIT	630	RU
3	Removable Core	8020	630	RU
2	Conc Overhead Stop	6-X36	630	RF

2	Door Closer	J7500	689	NO
1	Threshold	272A MSES25SS		PE
1	Rain Guard	346C		PE
1	Gasketing (mullion)	5110BL		PE
2	Sweep (w/drip edge)	3452CNB		PE
2	Frame Harness	QC-C1500P		MK
2	Door Harness	QC-C___ - LENGTH TO SUIT		MK
2	Switch	3287		SA
2	Electric Power Transfer	EL-CEPT		SU
1	Power Supply	3540		SA

Notes:
Perimeter/meeting stile seals by frame/door supplier.
Electronic Operation: Valid card at adjacent door retracts latchbolt. Free egress at all times. In case of power loss, door remains locked and latched.

Set: 3.0

Doors: EXA103, EXB101, EXB103, EXC001

2	Continuous Hinge	CFM__SLF-HD1 PT - DOOR HEIGHT		PE
1	Removable Mullion	L980A	US28	SA
1	Rim Exit Device	LC 16 55 56 8810 862	US32D	SA
1	Access Control Rim Exit	LC 16 56 M1-8804 862	US32D	SA
1	Cylinder (rim)	3080 CT6R	630	RU
3	Cylinder (mortise)	1080 CT6R - LENGTH/CAM TO SUIT	630	RU
4	Removable Core	8020	630	RU
2	Conc Overhead Stop	6-X36	630	RF
2	Door Closer	J7500	689	NO
1	Threshold	272A MSES25SS		PE
1	Rain Guard	346C		PE
1	Gasketing (mullion)	5110BL		PE
2	Sweep (w/drip edge)	3452CNB		PE
2	Frame Harness	QC-C1500P		MK
3	Door Harness	QC-C___ - LENGTH TO SUIT		MK
1	Switch	3287		SA
2	Electric Power Transfer	EL-CEPT		SU
1	Power Supply	3540		SA

Notes:
Perimeter/meeting stile seals by frame/door supplier.
Electronic Operation: Valid card (and intercom signal at EXB101, EXC001) or key retracts latchbolt. Free egress at all times. In case of power loss, door remains locked and latched.

Set: 4.0

Doors: EXC009

2	Continuous Hinge	CFM__SLF-HD1 PT - DOOR HEIGHT		PE
1	Removable Mullion	L980A	US28	SA
1	Rim Exit Device	LC 16 55 56 8810 862	US32D	SA
1	Access Control Rim Exit	LC 16 56 M1-8804 862	US32D	SA
1	Cylinder (rim)	3080 CT6R	630	RU
3	Cylinder (mortise)	1080 CT6R - LENGTH/CAM TO SUIT	630	RU
4	Removable Core	8020	630	RU
2	Door Closer	CPS7500	689	NO

1	Threshold	279x224AFGT MSES25SS		PE
1	Rain Guard	346C		PE
1	Gasketing (mullion)	5110BL		PE
2	Sweep (w/drip edge)	3452CNB		PE
3	Frame Harness	QC-C1500P		MK
2	Door Harness	QC-C___ - LENGTH TO SUIT		MK
1	Switch	3287		SA
2	Electric Power Transfer	EL-CEPT		SU
1	Power Supply	3540		SA

Notes:
Perimeter/meeting stile seals by frame/door supplier.
Electronic Operation: Valid card or key retracts latchbolt. Free egress at all times. In case of power loss, door remains locked and latched.

Set: 5.0

Doors: EXA104

2	Continuous Hinge	CFM__SLF-HD1 - DOOR HEIGHT		PE
1	Removable Mullion	L980A	US28	SA
2	Rim Exit Device	LD 8810	US32D	SA
2	Conc Overhead Stop	6-X36	630	RF
2	Door Closer	J7500	689	NO
1	Threshold	272A MSES25SS		PE
1	Rain Guard	346C		PE
2	Sweep (w/drip edge)	3452CNB		PE
2	Switch	3287		SA

Notes:
Perimeter/meeting stile seals by frame/door supplier.

Set: 6.0

Doors: EXC003, EXC012

2	Continuous Hinge	CFM__SLF-HD1 - DOOR HEIGHT		PE
1	Removable Mullion	L980A	US28	SA
2	Rim Exit Device	LD 8810	US32D	SA
2	Door Closer	CPS7500	689	NO
1	Threshold	272A MSES25SS		PE
1	Rain Guard	346C		PE
2	Sweep (w/drip edge)	3452CNB		PE
2	Switch	3287		SA

Notes:
Perimeter/meeting stile seals by frame/door supplier.

Set: 7.0

Doors: EXA101, EXA102

1	Continuous Hinge	CFM__SLF-HD1 PT - DOOR HEIGHT		PE
1	Access Control Mort Lock	ML20608 x SELP10-SEC NSA R0_ PHRR0_ CT6R	626	RU
1	Removable Core	8020	630	RU
1	Door Closer	CPS7500	689	NO

1	Kick Plate	K1050 10" HVBEV	US32D	RO
1	Threshold	279x224AFGT MSES25SS		PE
1	Rain Guard	346C		PE
1	Sweep (w/drip edge)	3452CNB		PE
1	Frame Harness	QC-C1500P		MK
1	Door Harness	QC-C___ - LENGTH TO SUIT		MK
1	Electric Power Transfer	EL-CEPT		SU
1	Power Supply	BPS-24-1		RU

Notes:
Perimeter/meeting stile seals by frame/door supplier.
Electronic Operation: Valid card unlocks outside lever, unless deadbolt is projected, or key retracts latchbolt. Free egress at all times. In case of power loss, door remains locked and latched.

Set: 8.0

Doors: EXC005, EXC006

1	Continuous Hinge	CFM__SLF-HD1 PT - DOOR HEIGHT		PE
1	Access Control Mort Lock	ML20606 x SELP10-SEC NSA R0_ CT6R	626	RU
1	Removable Core	8020	630	RU
1	Door Closer	CPS7500	689	NO
1	Kick Plate	K1050 10" HVBEV	US32D	RO
1	Threshold	279x224AFGT MSES25SS		PE
1	Rain Guard	346C		PE
1	Sweep (w/drip edge)	3452CNB		PE
1	Frame Harness	QC-C1500P		MK
1	Door Harness	QC-C___ - LENGTH TO SUIT		MK
1	Electric Power Transfer	EL-CEPT		SU
1	Power Supply	BPS-24-1		RU

Notes:
Perimeter/meeting stile seals by frame/door supplier.
Electronic Operation: Valid card (and intercom signal EXC006) unlocks outside lever or key retracts latchbolt. Free egress at all times. In case of power loss, door remains locked and latched.

Set: 9.0

Doors: EXC007, EXC008

2	Continuous Hinge	CFM__SLF-HD1 - DOOR HEIGHT		PE
1	Dust Proof Strike	570	US26D	RO
2	Flush Bolt (manual)	555 (or) 557	US26D	RO
1	Storeroom Lock	ML2057 NSA CT6R	626	RU
1	Removable Core	8020	630	RU
2	Door Closer	CPS7500	689	NO
1	Threshold	279x224AFGT MSES25SS		PE
1	Rain Guard	346C		PE
2	Sweep (w/drip edge)	3452CNB		PE
2	Switch	3287		SA

Notes:
Perimeter/meeting stile seals by frame/door supplier.

Set: 10.0

Doors: EXC010

1	Continuous Hinge	CFM__SLF-HD1 - DOOR HEIGHT		PE
1	Storeroom Lock	ML2057 NSA CT6R	626	RU
1	Removable Core	8020	630	RU
1	Door Closer	CPS7500	689	NO
1	Threshold	279x224AFGT MSES25SS		PE
1	Rain Guard	346C		PE
1	Sweep (w/drip edge)	3452CNB		PE
1	Switch	3287		SA

Notes:
Perimeter/meeting stile seals by frame/door supplier.

Set: 11.0

Doors: B120A

2	Electric Hinge (heavy weight)	T4A3786-QC12	US26D	MK
4	Hinge (heavy weight)	T4A3786	US26D	MK
1	Removable Mullion	L980S	PC	SA
1	Rim Exit Device	LC 16 55 8810 ETL	US32D	SA
1	Access Control Rim Exit	LC 16 M1-8876-24V-IPS ETL	US32D	SA
1	Cylinder (rim)	3080 CT6R	630	RU
3	Cylinder (mortise)	1080 CT6R - LENGTH/CAM TO SUIT	630	RU
4	Removable Core	8020	630	RU
2	Door Closer	CLP7500	689	NO
2	Kick Plate	K1050 10" HVBEV	US32D	RO
1	Gasketing (head/jamb)	S88BL		PE
1	Gasketing (mullion)	5110BL		PE
2	Frame Harness	QC-C1500P		MK
2	Door Harness	QC-C___ - LENGTH TO SUIT		MK
1	Switch	3287		SA
1	Power Supply	3520		SA

Notes:
Electronic Operation: Valid card unlocks outside lever or key retracts latchbolt. Free egress at all times. In case of power loss, door remains locked and latched.

Set: 12.0

Doors: B120B

6	Electric Hinge (heavy weight)	T4A3786-QC12	US26D	MK
6	Hinge (heavy weight)	T4A3786	US26D	MK
1	Removable Mullion	L980S	PC	SA
2	Rim Exit Device	LC 16 55 8810 ETL	US32D	SA
2	Cylinder (mortise)	1080 CT6R - LENGTH/CAM TO SUIT	630	RU
2	Removable Core	8020	630	RU
2	Door Closer	CLP7500	689	NO
2	Kick Plate	K1050 10" HVBEV	US32D	RO
1	Gasketing (head/jamb)	S773BL		PE
1	Gasketing (mullion)	5110BL		PE
1	Frame Harness	QC-C1500P		MK
1	Door Harness	QC-C___ - LENGTH TO SUIT		MK
1	Switch	3287		SA

Set: 13.0

Doors: A101, A102, A114, A115, A117, A118, A128, A129, A133, A134, A201, A202, A209, A210, A214, A215, A217, A218, A228, A229, A233, A234, B208, B209, B216, B217, B219, B220

3	Hinge	TA2714	US26D	MK
1	Rim Exit Device	LC LD 8804 ETL	US32D	SA
1	Cylinder (rim)	3080 CT6R	630	RU
1	Door Closer	R7500H (or) PR7500H	689	NO
1	Kick Plate	K1050 10" HVBEV	US32D	RO
1	Door Stop	403 (or) 441CU	US26D	RO
1	Gasketing (head/jamb)	S773BL		PE

Set: 13.1

Doors: C121

3	Hinge	TA2714	US26D	MK
1	Rim Exit Device	LC LD 8804 ETL	US32D	SA
1	Cylinder (rim)	3080 CT6R	630	RU
1	Door Closer	R7500 (or) PR7500	689	NO
1	Kick Plate	K1050 10" HVBEV	US32D	RO
1	Door Stop	403 (or) 441CU	US26D	RO
1	Gasketing (head/jamb)	S88BL		PE

Set: 14.0

Doors: A116, A130, A216, A230, B218

6	Hinge (heavy weight)	T4A3786	US26D	MK
1	Removable Mullion	L980S	PC	SA
1	Rim Exit Device	LD 8810	US32D	SA
1	Rim Exit Device	LC LD 8804 ETL	US32D	SA
1	Cylinder (rim)	3080 CT6R	630	RU
1	Cylinder (mortise)	1080 CT6R - LENGTH/CAM TO SUIT	630	RU
2	Removable Core	8020	630	RU
2	Door Closer	R7500 (or) PR7500	689	NO
2	Kick Plate	K1050 10" HVBEV	US32D	RO
2	Electromagnetic Holder	998 24VDC	689	RF
1	Gasketing (head/jamb)	S88BL		PE
1	Gasketing (mullion)	5110BL		PE
1	Power Supply	BPS-24-1		RU

Notes:
Coordinate electromagnetic holder to be located on frame mullion with door at 180-degrees.
Electromagnetic holders connected to remote release device (by security) for a lockdown event.

Set: 15.0

Doors: A-S1A, A-S1B, A-S2A, A-S2B, B-S1A

6	Hinge (heavy weight)	T4A3786	US26D	MK
1	Removable Mullion	12-L980	PC	SA
2	Rim Exit Device	12 8815 ETL	US32D	SA
2	Door Closer	PR7500	689	NO
2	Kick Plate	K1050 10" HVBEV	US32D	RO
2	Electromagnetic Holder	998 24VDC	689	RF

1	Gasketing (head/jamb)	S88BL		PE
1	Gasketing (mullion)	5110BL		PE
2	Astragal (split)	297AS		PE

Notes:
Connect holder to fire alarm system to release upon fire alarm.

Set: 16.0

Doors: B121A, C115A, C115B, C116A, C116B

6	Hinge (heavy weight)	T4A3786	US26D	MK
1	Removable Mullion	L980S	PC	SA
2	Rim Exit Device	LC 8816 ETL	US32D	SA
2	Cylinder (rim)	3080 CT6R	630	RU
3	Cylinder (mortise)	1080 CT6R - LENGTH/CAM TO SUIT	630	RU
5	Removable Core	8020	630	RU
2	Door Closer	R7500 (or) PR7500	689	NO
2	Kick Plate	K1050 10" HVBEV	US32D	RO
2	Door Stop	403 (or) 441CU	US26D	RO
1	Gasketing (head/jamb)	S773BL		PE
1	Gasketing (mullion)	5110BL		PE

Set: 17.0

Doors: B121B

3	Hinge (heavy weight)	T4A3786	US26D	MK
1	Rim Exit Device	LC 8816 ETL	US32D	SA
1	Cylinder (rim)	3080 CT6R	630	RU
1	Cylinder (mortise)	1080 CT6R - LENGTH/CAM TO SUIT	630	RU
2	Removable Core	8020	630	RU
1	Door Closer	R7500 (or) PR7500	689	NO
1	Kick Plate	K1050 10" HVBEV	US32D	RO
1	Door Stop	403 (or) 441CU	US26D	RO
1	Gasketing (head/jamb)	S773BL		PE

Set: 18.0

Doors: B124A, B124B, B128B

2	Continuous Hinge	HG315 - DOOR HEIGHT	630	MR
1	Removable Mullion	12-L980	PC	SA
1	Rim Exit Device	12 8810	US32D	SA
1	Rim Exit Device	LC 12 8804 ETL	US32D	SA
1	Cylinder (rim)	3080 CT6R	630	RU
1	Cylinder (mortise)	1080 CT6R - LENGTH/CAM TO SUIT	630	RU
1	Removable Core	8020	630	RU
2	Door Closer	PR7500	689	NO
2	Kick Plate	K1050 10" HVBEV	US32D	RO
2	Electromagnetic Holder	998 24VDC	689	RF
1	Gasketing (head/jamb)	S88BL		PE
1	Gasketing (mullion)	5110BL		PE
1	Astragal (split)	297AS		PE

Notes:

Connect holder to fire alarm system to release upon fire alarm. Electromagnetic holders also connected to remote release device (by security) for a lockdown event.

Set: 19.0

Doors: A126, A226, B115A, B125

1	Electric Hinge (heavy weight)	T4A3786-QC12	US26D	MK
2	Hinge (heavy weight)	T4A3786	US26D	MK
1	Access Control Mort Lock	ML20606 x SELP10-SEC NSA R0_ CT6R	626	RU
1	Removable Core	8020	630	RU
1	Door Closer	R7500 (or) PR7500	689	NO
1	Kick Plate	K1050 10" HVBEV	US32D	RO
1	Door Stop	403 (or) 441CU	US26D	RO
1	Gasketing (head/jamb)	S88BL		PE
1	Frame Harness	QC-C1500P		MK
1	Door Harness	QC-C___ - LENGTH TO SUIT		MK
1	Power Supply	BPS-24-1		RU

Notes:
Electronic Operation: Valid card (and intercom signal at B115A)l unlocks outside lever or key retracts latchbolt. Free egress at all times. In case of power loss, door remains locked and latched.

Set: 20.0

Doors: C136

6	Hinge	TA2714	US26D	MK
1	Dust Proof Strike	570	US26D	RO
2	Flush Bolt (manual)	555 (or) 557	US26D	RO
1	Storeroom Lock	CL3357 NZD CT6R	626	RU
1	Removable Core	8020	630	RU
1	Door Closer	R7500 (or) PR7500	689	NO
2	Kick Plate	K1050 10" HVBEV	US32D	RO
2	Door Stop	403 (or) 441CU	US26D	RO
2	Silencer	608 (or) 609	GRY	RO

Set: 21.0

Doors: B215.1, C104

6	Hinge	TA2714	US26D	MK
1	Dust Proof Strike	570	US26D	RO
2	Flush Bolt (manual)	555 (or) 557	US26D	RO
1	Storeroom Lock	CL3357 NZD CT6R	626	RU
1	Removable Core	8020	630	RU
1	Surf Overhead Stop	10-X36	652	RF
1	Door Closer	CLP7500	689	NO
2	Kick Plate	K1050 10" HVBEV	US32D	RO
2	Silencer	608 (or) 609	GRY	RO

Set: 22.0

Doors: B102, B119

3	Hinge	TA2714	US26D	MK
1	Storeroom Lock	CL3357 NZD CT6R	626	RU
1	Removable Core	8020	630	RU

1	Door Stop	403 (or) 441CU	US26D	RO
3	Silencer	608 (or) 609	GRY	RO

Set: 23.0

Doors: A112, A119, A120, A120.1, A131, A132, A137, A212, A219, A222.1, A231, A232, A235, B123, B213

3	Hinge	TA2714	US26D	MK
1	Storeroom Lock	CL3357 NZD CT6R	626	RU
1	Removable Core	8020	630	RU
1	Door Closer	R7500 (or) PR7500	689	NO
1	Kick Plate	K1050 10" HVBEV	US32D	RO
1	Door Stop	403 (or) 441CU	US26D	RO
3	Silencer	608 (or) 609	GRY	RO

Notes:

Set: 24.0

Doors: C103

3	Hinge	TA2714	US26D	MK
1	Storeroom Lock	CL3357 NZD CT6R	626	RU
1	Removable Core	8020	630	RU
1	Door Closer	CLP7500	689	NO
1	Kick Plate	K1050 10" HVBEV	US32D	RO
3	Silencer	608 (or) 609	GRY	RO

Set: 25.0

Doors: B105, B108, B111, B112, B114, B122, B206, C129

3	Hinge	TA2714	US26D	MK
1	Office Lock	CL3351 NZD CT6D	626	RU
1	Removable Core	8020	630	RU
1	Door Stop	403 (or) 441CU	US26D	RO
3	Silencer	608 (or) 609	GRY	RO

Set: 26.0

Doors: C112, C125

3	Hinge	TA2714	US26D	MK
1	Office Lock	CL3351 NZD CT6D	626	RU
1	Removable Core	8020	630	RU
1	Door Closer	R7500 (or) PR7500	689	NO
1	Kick Plate	K1050 10" HVBEV	US32D	RO
1	Door Stop	403 (or) 441CU	US26D	RO
1	Gasketing (head/jamb)	S773BL		PE

Set: 27.0

Doors: B107, B109, B117A

3	Hinge	TA2714	US26D	MK
1	Passage Set	CL3310 NZD	626	RU
1	Door Stop	403 (or) 441CU	US26D	RO

3	Silencer	608 (or) 609	GRY	RO

Set: 27.1

Doors: C130

3	Hinge	TA2714	US26D	MK
1	Passage Set	CL3310 NZD	626	RU
1	Door Stop	403 (or) 441CU	US26D	RO
1	Door Bottom	4301CRL		PE
3	Silencer	608 (or) 609	GRY	RO

Set: 28.0

Doors: B206.1, C110, C111, C128

3	Hinge	TA2714	US26D	MK
1	Classroom Lock	CL3355 NZD CT6D	626	RU
1	Removable Core	8020	630	RU
1	Door Stop	403 (or) 441CU	US26D	RO
3	Silencer	608 (or) 609	GRY	RO

Set: 28.1

Doors: C133

3	Hinge	TA2714	US26D	MK
1	Classroom Lock	CL3355 NZD CT6D	626	RU
1	Removable Core	8020	630	RU
1	Door Stop	403 (or) 441CU	US26D	RO
1	Door Bottom	4301CRL		PE
3	Silencer	608 (or) 609	GRY	RO

Set: 29.0

Doors: C118

3	Hinge	TA2714	US26D	MK
1	Classroom Lock	CL3355 NZD CT6D	626	RU
1	Door Stop	403 (or) 441CU	US26D	RO
1	Threshold	166A MSES10SS		PE
1	Gasketing (head/jamb)	S773BL		PE
1	Sweep	315CN		PE

Set: 30.0

Doors: B113, B116, B207.1

3	Hinge	TA2714	US26D	MK
1	Classroom Lock	CL3355 NZD CT6D	626	RU
1	Removable Core	8020	630	RU
1	Surf Overhead Stop	10-X36	652	RF
3	Silencer	608 (or) 609	GRY	RO

Set: 31.0

Doors: C113

3	Hinge	TA2714	US26D	MK

1	Classroom Lock	CL3355 NZD CT6D	626	RU
1	Removable Core	8020	630	RU
1	Door Closer	R7500 (or) PR7500	689	NO
1	Kick Plate	K1050 10" HVBEV	US32D	RO
1	Door Stop	403 (or) 441CU	US26D	RO
1	Gasketing (head/jamb)	S773BL		PE

Notes:

Set: 32.0

Doors: C117

3	Hinge	TA2714	US26D	MK
1	Classroom Lock	CL3355 NZD CT6D	626	RU
1	Removable Core	8020	630	RU
1	Door Closer	R7500H (or) PR7500H	689	NO
1	Kick Plate	K1050 10" HVBEV	US32D	RO
1	Door Stop	403 (or) 441CU	US26D	RO
3	Silencer	608 (or) 609	GRY	RO

Notes:

Set: 33.0

Doors: B103, B118, C127.1

3	Hinge	TA2714	US26D	MK
1	Privacy Set	CL3320 NZD	626	RU
1	Mop Plate	K1050 4" HVBEV	US32D	RO
1	Kick Plate	K1050 10" HVBEV	US32D	RO
1	Door Stop	403 (or) 441CU	US26D	RO
3	Silencer	608 (or) 609	GRY	RO

Set: 34.0

Doors: A111, A125, A211, A225, B214, C134

3	Hinge	TA2714	US26D	MK
1	Privacy Set	CL3320 NZD	626	RU
1	Door Closer	R7500 (or) PR7500	689	NO
1	Mop Plate	K1050 4" HVBEV	US32D	RO
1	Kick Plate	K1050 10" HVBEV	US32D	RO
1	Door Stop	403 (or) 441CU	US26D	RO
3	Silencer	608 (or) 609	GRY	RO

Set: 35.0

Doors: C124

6	Hinge	TA2714	US26D	MK
1	Dust Proof Strike	570	US26D	RO
2	Flush Bolt (manual)	555 (or) 557	US26D	RO
1	Deadbolt	DL4117 CT6	626	RU
1	Removable Core	8020	630	RU
2	Flush Pull (set)	94Px94L	US32D	RO
2	Surf Overhead Stop	10-X36	652	RF

2	Kick Plate	K1050 10" HVBEV	US32D	RO
2	Silencer	608 (or) 609	GRY	RO

Set: 36.0

Doors: C119B, C119C, C119D, C119E

2	Continuous Hinge	CFM__SLF-HD1 - DOOR HEIGHT		PE
2	Roller Latch	590	US26D	RO
2	Flush Pull (set)	94Px94L	US32D	RO
2	Silencer	608 (or) 609	GRY	RO

Set: 37.0

Doors: C127

3	Hinge	TA2714	US26D	MK
1	Push Plate	70G (4 x 20)	US32D	RO
1	Door Pull	BF Y110 Mtg-Type 1	US32D	RO
1	Door Closer	R7500 (or) PR7500	689	NO
1	Mop Plate	K1050 4" HVBEV	US32D	RO
1	Kick Plate	K1050 10" HVBEV	US32D	RO
1	Door Stop	403 (or) 441CU	US26D	RO
3	Silencer	608 (or) 609	GRY	RO

Set: 38.0

Doors: C108

6	Hinge	TA2714	US26D	MK
1	Dust Proof Strike	570	US26D	RO
2	Flush Bolt (manual)	555 (or) 557	US26D	RO
1	Storeroom Lock	CL3357 NZD CT6R	626	RU
1	Removable Core	8020	630	RU
2	Door Stop	403 (or) 441CU	US26D	RO
1	Threshold	166A MSES10SS		PE
1	Gasketing (head/jamb)	S773BL		PE
2	Sweep	315CN		PE
2	Astragal (split)	297AS		PE

Set: 39.0

Doors: A103, A104, A105, A106, A108, A109, A110, A121, A203, A204, A205, A206, A208, A222, B126, B127, B203, B204, B207, B210, B211, C109

3	Hinge	TA2714	US26D	MK
1	Storeroom Lock	CL3357 NZD CT6R	626	RU
1	Removable Core	8020	630	RU
1	Door Stop	403 (or) 441CU	US26D	RO
1	Gasketing (head/jamb)	S773BL		PE

Set: 40.0

Doors: C107

3	Hinge	TA2714	US26D	MK
1	Storeroom Lock	CL3357 NZD CT6R	626	RU
1	Removable Core	8020	630	RU

1	Door Stop	403 (or) 441CU	US26D	RO
1	Threshold	166A MSES10SS		PE
1	Gasketing (head/jamb)	S773BL		PE
1	Sweep	315CN		PE

Set: 41.0

Doors: A113, A127, A213, A227, B101, B106A, B106B, B110, B115B, B117B, B129, B212, C126

3	Hinge (heavy weight)	T4A3786	US26D	MK
1	Classroom Intruder Lock	CL3352 NZD CT6D	626	RU
2	Removable Core	8020	630	RU
1	Door Closer	R7500 (or) PR7500	689	NO
1	Kick Plate	K1050 10" HVBEV	US32D	RO
1	Door Stop	403 (or) 441CU	US26D	RO
1	Gasketing (head/jamb)	S773BL		PE

Notes:

Set: 42.0

Doors: C114

6	Hinge (heavy weight)	T4A3786	US26D	MK
2	Push Plate	70G (4 x 20)	US32D	RO
2	Door Closer	PR7500	689	NO
2	Kick Plate	K1050 10" HVBEV	US32D	RO
2	Door Stop	403 (or) 441CU	US26D	RO
2	Silencer	608 (or) 609	GRY	RO

Set: 43.0

Doors: C101A, C101B

6	Hinge (heavy weight)	T4A3786	US26D	MK
2	Push Plate	70G (4 x 20)	US32D	RO
2	Door Pull	BF Y110 Mtg-Type 1	US32D	RO
2	Door Closer	CLP7500T	689	NO
2	Kick Plate	K1050 10" HVBEV	US32D	RO
2	Silencer	608 (or) 609	GRY	RO

Set: 44.0

Doors: C123E

1	Continuous Hinge	HG305 - DOOR HEIGHT	630	MR
1	Classroom Lock	CL3355 NZD CT6D	626	RU
1	Removable Core	8020	630	RU
1	Door Closer	R7500H (or) PR7500H	689	NO
1	Mop Plate	K1050 4" HVBEV	US32D	RO
1	Armor Plate	K1050 34" HVBEV	US32D	RO
1	Door Stop	403 (or) 441CU	US26D	RO
3	Silencer	608 (or) 609	GRY	RO

Set: 45.0

Doors: C123A, C123D

1	Continuous Hinge	HG305 - DOOR HEIGHT	630	MR
1	Classroom Lock	CL3355 NZD CT6D	626	RU
1	Removable Core	8020	630	RU
1	Door Closer	CLP7500T	689	NO
1	Mop Plate	K1050 4" HVBEV	US32D	RO
1	Armor Plate	K1050 34" HVBEV	US32D	RO
3	Silencer	608 (or) 609	GRY	RO

Set: 46.0

Doors: GATE-1, GATE-2 (See Civil Drawings for gate locations at playground)

1	Gate Lock	GL1-FSM		SU
1	Cylinder (mortise)	1080 CT6R - LENGTH/CAM TO SUIT	630	RU
1	Removable Core	8020	630	RU
1	Door Pull	BF Y110 Mtg-Type 1	US32D	RO
1	Gate Closer	1351	689	RF
1	Door Loop	TSB-C		SU
1	Electromechanical Bar	WEMB-CL		SU
1	Power Supply	BPS-24-1		RU

Notes: Balance of hardware by gate supplier.
Connect power supply to fire alarm system.
Card reader by security integrator.
Electronic Operation: Valid card or key releases gate lock. Free egress at all times. In case of power loss or fire alarm, door remains unlocked and unlatched.

END OF SECTION 087100

SECTION 088000

GLAZING

PART 1 - GENERAL

1.1 RELATED DOCUMENTS

A. Drawings and general provisions of the Contract, including General and Supplementary Conditions and Division 01 Specification Sections, apply to this Section.

1.2 SUMMARY

A. Section includes glazing for the following products and applications, including those specified in other Sections where glazing requirements are specified by reference to this Section:

1. Glass for windows, doors, interior borrowed lites, and storefront framing.
2. Glazing sealants and accessories.

1.3 DEFINITIONS

A. Glass Manufacturers: Firms that produce primary glass, fabricated glass, or both, as defined in referenced glazing publications.

B. Glass Thicknesses: Indicated by thickness designations in millimeters according to ASTM C 1036.

C. IBC: International Building Code.

D. Interspace: Space between lites of an insulating-glass unit.

1.4 COORDINATION

A. Coordinate glazing channel dimensions to provide necessary bite on glass, minimum edge and face clearances, and adequate sealant thicknesses, with reasonable tolerances.

1.5 PREINSTALLATION MEETINGS

A. Preinstallation Conference: Conduct conference at Project site.

1.6 ACTION SUBMITTALS

A. Product Data: For each type of product.

B. Glass Samples: For each type of glass product other than clear monolithic vision glass; 12 inches square.

C. Glazing Accessory Samples: For gaskets sealants and colored spacers, in 12-inch lengths. Install sealant Samples between two strips of material representative in color of the adjoining framing system.

D. Glazing Schedule: List glass types and thicknesses for each size opening and location. Use same designations indicated on Drawings.

E. Delegated-Design Submittal: For glass indicated to comply with performance requirements and design criteria, including analysis data signed and sealed by the qualified professional engineer responsible for their preparation.

1.7 INFORMATIONAL SUBMITTALS

A. Qualification Data: For installers, manufacturers of insulating-glass units with sputter-coated, low-e coatings, glass testing agency and sealant testing agency.

B. Product Certificates: For glass and glazing products, from manufacturer.

C. Product Test Reports: Based on evaluation of comprehensive tests performed by a qualified testing agency, for coated glass, insulating glass, glazing sealants and glazing gaskets.

1. For glazing sealants, provide test reports based on testing current sealant formulations within previous 36-month period.

D. Preconstruction adhesion and compatibility test report.

E. Sample Warranties: For special warranties.

1.8 QUALITY ASSURANCE

A. Manufacturer Qualifications for Insulating-Glass Units with Sputter-Coated, Low-E Coatings: A qualified insulating-glass manufacturer who is approved and certified by coated-glass manufacturer.

B. Installer Qualifications: A qualified installer who employs glass installers for this Project who are certified under the National Glass Association's Certified Glass Installer Program.

C. Glass Testing Agency Qualifications: A qualified independent testing agency accredited according to the NFRC CAP 1 Certification Agency Program.

D. Sealant Testing Agency Qualifications: An independent testing agency qualified according to ASTM C 1021 to conduct the testing indicated.

E. Mockups: Build mockups to demonstrate aesthetic effects and to set quality standards for materials and execution.

1. Install glazing in mockups specified in Section 084113 "Aluminum-Framed Entrances and Storefronts" to match glazing systems required for Project, including glazing methods.

1.9 DELIVERY, STORAGE, AND HANDLING

A. Protect glazing materials according to manufacturer's written instructions. Prevent damage to glass and glazing materials from condensation, temperature changes, direct exposure to sun, or other causes.

B. Comply with insulating-glass manufacturer's written recommendations for venting and sealing units to avoid hermetic seal ruptures due to altitude change.

1.10 FIELD CONDITIONS

A. Environmental Limitations: Do not proceed with glazing when ambient and substrate temperature conditions are outside limits permitted by glazing material manufacturers and when glazing channel substrates are wet from rain, frost, condensation, or other causes.

1. Do not install glazing sealants when ambient and substrate temperature conditions are outside limits permitted by sealant manufacturer or below 40 deg F.

1.11 WARRANTY

A. Manufacturer's Special Warranty for Laminated Glass: Manufacturer agrees to replace laminated-glass units that deteriorate within specified warranty period. Deterioration of laminated glass is defined as defects developed from normal use that are not attributed to glass breakage or to maintaining and cleaning laminated glass contrary to manufacturer's written instructions. Defects include edge separation, delamination materially obstructing vision through glass, and blemishes exceeding those allowed by referenced laminated-glass standard.

1. Warranty Period: 10 years from date of Substantial Completion.

B. Manufacturer's Special Warranty on Insulating Glass: Manufacturer's standard form in which insulating-glass manufacturer agrees to replace insulating-glass units that deteriorate within specified warranty period. Deterioration of insulating glass is defined as failure of hermetic seal under normal use that is not attributed to glass breakage or to maintaining and cleaning insulating glass contrary to manufacturer's written instructions. Evidence of failure is the obstruction of vision by dust, moisture, or film on interior surfaces of glass.

1. Warranty Period: 10 years from date of Substantial Completion.

PART 2 - PRODUCTS

2.1 MANUFACTURERS

A. Manufacturers: Subject to compliance with requirements, available manufacturers offering products that may be incorporated into the Work include, but are not limited to, the following:

1. AGC Flat Glass North America.
2. Cardinal Glass Industries, Inc.
3. Guardian Industries Corp.
4. Oldcastle Glass.
5. Vitro Architectural Glass (Formerly PPG Glass).

2.2 PERFORMANCE REQUIREMENTS

A. General: Installed glazing systems shall withstand normal thermal movement and wind and impact loads (where applicable) without failure, including loss or glass breakage attributable to the following: defective manufacture, fabrication, or installation; failure of sealants or gaskets to remain watertight and airtight; deterioration of glazing materials; or other defects in construction.

B. Structural Performance: Glazing shall withstand the following design loads within limits and under conditions indicated determined according to the IBC and ASTM E 1300.

1. Design Wind Pressures: As indicated on Drawings.
2. Design Wind Pressures: Determine design wind pressures applicable to Project according to ASCE/SEI 7, based on heights above grade indicated on Drawings.

    a. Wind Design Data: As indicated on Drawings.

C. Safety Glazing: Where safety glazing is indicated, provide glazing that complies with 16 CFR 1201, Category II.

D. Thermal and Optical Performance Properties: Provide glass with performance properties specified, as indicated in manufacturer's published test data, based on procedures indicated below:

1. For monolithic-glass lites, properties are based on units with lites 6 mm thick.
2. For laminated-glass lites, properties are based on products of construction indicated.
3. For insulating-glass units, properties are based on units of thickness indicated for overall unit and for each lite.
4. U-Factors: Center-of-glazing values, according to NFRC 100 and based on LBL's WINDOW 5.2 computer program, expressed as Btu/sq. ft. x h x deg F.
5. Solar Heat-Gain Coefficient and Visible Transmittance: Center-of-glazing values, according to NFRC 200 and based on LBL's WINDOW 5.2 computer program.
6. Visible Reflectance: Center-of-glazing values, according to NFRC 300.

2.3 GLASS PRODUCTS, GENERAL

A. Glazing Publications: Comply with published recommendations of glass product manufacturers and organizations below unless more stringent requirements are indicated. See these publications for glazing terms not otherwise defined in this Section or in referenced standards.

1. GANA Publications: "Laminated Glazing Reference Manual" and]"Glazing Manual."
2. IGMA Publication for Insulating Glass: SIGMA TM-3000, "North American Glazing Guidelines for Sealed Insulating Glass Units for Commercial and Residential Use."

B. Safety Glazing Labeling: Where safety glazing is indicated, permanently mark glazing with certification label of the SGCC or another certification agency acceptable to authorities having jurisdiction. Label shall indicate manufacturer's name, type of glass, thickness, and safety glazing standard with which glass complies.

C. Insulating-Glass Certification Program: Permanently marked either on spacers or on at least one component lite of units with appropriate certification label of IGCC.

D. Thickness: Where glass thickness is indicated, it is a minimum. Provide glass that complies with performance requirements and is not less than the thickness indicated.

1. Minimum Glass Thickness for Exterior Lites: 6 mm.

E. Strength: Where annealed float glass is indicated, provide annealed float glass, heat-strengthened float glass, or fully tempered float glass as needed to comply with "Performance Requirements" Article. Where heat-strengthened float glass is indicated, provide heat-strengthened float glass or fully tempered float glass as needed to comply with "Performance Requirements" Article. Where fully tempered float glass is indicated, provide fully tempered float glass.

2.4 GLASS PRODUCTSClear Annealed Float Glass: ASTM C 1036, Type I, Class 1 (clear), Quality-Q3.

B. Fully Tempered Float Glass: ASTM C 1048, Kind FT (fully tempered), Condition A (uncoated) unless otherwise indicated, Type I, Class 1 (clear) or Class 2 (tinted) as indicated, Quality-Q3.

1. Fabrication Process: By horizontal (roller-hearth) process with roll-wave distortion parallel to bottom edge of glass as installed unless otherwise indicated.

C. Heat-Strengthened Float Glass: ASTM C 1048, Kind HS (heat strengthened), Type I, Condition A (uncoated) unless otherwise indicated, Type I, Class 1 (clear) or Class 2 (tinted) as indicated, Quality-Q3.

1. Fabrication Process: By horizontal (roller-hearth) process with roll-wave distortion parallel to bottom edge of glass as installed unless otherwise indicated.

2.5 LAMINATED GLASS

A. Laminated Glass: ASTM C 1172. Use materials that have a proven record of no tendency to bubble, discolor, or lose physical and mechanical properties after fabrication and installation.

1. Construction: Laminate glass with polyvinyl butyral interlayer for interior locations and ionomeric polymer interlayer for exterior locations to comply with interlayer manufacturer's written instructions.
2. Interlayer Thickness: Provide thickness not less than that indicated and as needed to comply with requirements.
3. Interlayer Color: Clear unless otherwise indicated.

2.6 INSULATING GLASS

A. Insulating-Glass Units: Factory-assembled units consisting of sealed lites of glass separated by a dehydrated interspace, qualified according to ASTM E 2190.

1. Sealing System: Dual seal, with manufacturer's standard primary and secondary sealants.
2. Perimeter Spacer: Manufacturer's standard spacer material and construction.
3. Desiccant: Molecular sieve or silica gel, or a blend of both.

2.7 GLAZING SEALANTS

A. General:

1. Compatibility: Compatible with one another and with other materials they contact, including glass products, seals of insulating-glass units, and glazing channel substrates, under conditions of service and application, as demonstrated by sealant manufacturer based on testing and field experience.
2. Suitability: Comply with sealant and glass manufacturers' written instructions for selecting glazing sealants suitable for applications indicated and for conditions existing at time of installation.
3. Colors of Exposed Glazing Sealants: As selected by Architect from manufacturer's full range.

B. Glazing Sealant: Neutral-curing silicone glazing sealant complying with ASTM C 920, Type S, Grade NS, Class 100/50, Use NT.

2.8 GLAZING TAPES

A. Back-Bedding Mastic Glazing Tapes: Preformed, butyl-based, 100 percent solids elastomeric tape; nonstaining and nonmigrating in contact with nonporous surfaces; with or without spacer rod as recommended in writing by tape and glass manufacturers for application indicated; and complying with ASTM C 1281 and AAMA 800 for products indicated below:

1. AAMA 804.3 tape, where indicated.
2. AAMA 806.3 tape, for glazing applications in which tape is subject to continuous pressure.
3. AAMA 807.3 tape, for glazing applications in which tape is not subject to continuous pressure.

B. Expanded Cellular Glazing Tapes: Closed-cell, PVC foam tapes; factory coated with adhesive on both surfaces; and complying with AAMA 800 for the following types:

1. AAMA 810.1, Type 1, for glazing applications in which tape acts as the primary sealant.
2. AAMA 810.1, Type 2, for glazing applications in which tape is used in combination with a full bead of liquid sealant.

2.9 MISCELLANEOUS GLAZING MATERIALS

A. General: Provide products of material, size, and shape complying with referenced glazing standard, with requirements of manufacturers of glass and other glazing materials for application indicated, and with a proven record of compatibility with surfaces contacted in installation.

B. Cleaners, Primers, and Sealers: Types recommended by sealant or gasket manufacturer.

C. Setting Blocks: Elastomeric material with a Shore, Type A durometer hardness of 85, plus or minus 5.

D. Spacers: Elastomeric blocks or continuous extrusions of hardness required by glass manufacturer to maintain glass lites in place for installation indicated.

E. Edge Blocks: Elastomeric material of hardness needed to limit glass lateral movement (side walking).

F. Cylindrical Glazing Sealant Backing: ASTM C 1330, Type O (open-cell material), of size and density to control glazing sealant depth and otherwise produce optimum glazing sealant performance.

2.10 FABRICATION OF GLAZING UNITS

A. Fabricate glazing units in sizes required to fit openings indicated for Project, with edge and face clearances, edge and surface conditions, and bite complying with written instructions of product manufacturer and referenced glazing publications, to comply with system performance requirements.

1. Allow for thermal movements from ambient and surface temperature changes acting on glass framing members and glazing components.

a. Temperature Change: 120 deg F, ambient; 180 deg F, material surfaces.

PART 3 - EXECUTION

3.1 EXAMINATION

A. Examine framing, glazing channels, and stops, with Installer present, for compliance with the following:

1. Manufacturing and installation tolerances, including those for size, squareness, and offsets at corners.
2. Presence and functioning of weep system.
3. Minimum required face or edge clearances.
4. Effective sealing between joints of glass-framing members.

B. Proceed with installation only after unsatisfactory conditions have been corrected.

3.2 PREPARATION

A. Clean glazing channels and other framing members receiving glass immediately before glazing. Remove coatings not firmly bonded to substrates.

B. Examine glazing units to locate exterior and interior surfaces. Label or mark units as needed so that exterior and interior surfaces are readily identifiable. Do not use materials that leave visible marks in the completed Work.

3.3 GLAZING, GENERAL

A. Comply with combined written instructions of manufacturers of glass, sealants, gaskets, and other glazing materials, unless more stringent requirements are indicated, including those in referenced glazing publications.

B. Protect glass edges from damage during handling and installation. Remove damaged glass from Project site and legally dispose of off Project site. Damaged glass includes glass with edge damage or other imperfections that, when installed, could weaken glass, impair performance, or impair appearance.

C. Apply primers to joint surfaces where required for adhesion of sealants, as determined by preconstruction testing.

D. Install setting blocks in sill rabbets, sized and located to comply with referenced glazing publications, unless otherwise required by glass manufacturer. Set blocks in thin course of compatible sealant suitable for heel bead.

E. Do not exceed edge pressures stipulated by glass manufacturers for installing glass lites.

F. Provide spacers for glass lites where length plus width is larger than 50 inches as follows:

1. Locate spacers directly opposite each other on both inside and outside faces of glass. Install correct size and spacing to preserve required face clearances, unless gaskets and glazing tapes are used that have demonstrated ability to maintain required face clearances and to comply with system performance requirements.
2. Provide 1/8-inch minimum bite of spacers on glass and use thickness equal to sealant width. With glazing tape, use thickness slightly less than final compressed thickness of tape.

G. Provide edge blocking where indicated or needed to prevent glass lites from moving sideways in glazing channel, as recommended in writing by glass manufacturer and according to requirements in referenced glazing publications.

H. Set glass lites in each series with uniform pattern, draw, bow, and similar characteristics.

I. Where wedge-shaped gaskets are driven into one side of channel to pressurize sealant or gasket on opposite side, provide adequate anchorage so gasket cannot walk out when installation is subjected to movement.

J. Square cut wedge-shaped gaskets at corners and install gaskets in a manner recommended by gasket manufacturer to prevent corners from pulling away; seal corner joints and butt joints with sealant recommended by gasket manufacturer.

3.4 TAPE GLAZING

A. Position tapes on fixed stops so that, when compressed by glass, their exposed edges are flush with or protrude slightly above sightline of stops.

B. Install tapes continuously, but not necessarily in one continuous length. Do not stretch tapes to make them fit opening.

C. Cover vertical framing joints by applying tapes to heads and sills first and then to jambs. Cover horizontal framing joints by applying tapes to jambs and then to heads and sills.

D. Place joints in tapes at corners of opening with adjoining lengths butted together, not lapped. Seal joints in tapes with compatible sealant approved by tape manufacturer.

E. Do not remove release paper from tape until just before each glazing unit is installed.

F. Apply heel bead of elastomeric sealant where indicated.

G. Center glass lites in openings on setting blocks and press firmly against tape by inserting dense compression gaskets formed and installed to lock in place against faces of removable stops. Start gasket applications at corners and work toward centers of openings.

H. Apply cap bead of elastomeric sealant over exposed edge of tape where indicated.

3.5 GASKET GLAZING (DRY)

A. Cut compression gaskets to lengths recommended by gasket manufacturer to fit openings exactly, with allowance for stretch during installation.

B. Insert soft compression gasket between glass and frame or fixed stop so it is securely in place with joints miter cut and bonded together at corners.

C. Installation with Drive-in Wedge Gaskets: Center glass lites in openings on setting blocks, and press firmly against soft compression gasket by inserting dense compression gaskets formed and installed to lock in place against faces of removable stops. Start gasket applications at corners and work toward centers of openings. Compress gaskets to produce a weathertight seal without developing bending stresses in glass. Seal gasket joints with sealant recommended by gasket manufacturer.

D. Installation with Pressure-Glazing Stops: Center glass lites in openings on setting blocks, and press firmly against soft compression gasket. Install dense compression gaskets and pressure-glazing stops, applying pressure uniformly to compression gaskets. Compress gaskets to produce a weathertight seal without developing bending stresses in glass. Seal gasket joints with sealant recommended by gasket manufacturer.

E. Install gaskets so they protrude past face of glazing stops.

3.6 SEALANT GLAZING (WET)

A. Install continuous spacers, or spacers combined with cylindrical sealant backing, between glass lites and glazing stops to maintain glass face clearances and to prevent sealant from extruding into glass channel and blocking weep systems until sealants cure. Secure spacers or spacers and backings in place and in position to control depth of installed sealant relative to edge clearance for optimum sealant performance.

B. Force sealants into glazing channels to eliminate voids and to ensure complete wetting or bond of sealant to glass and channel surfaces.

C. Tool exposed surfaces of sealants to provide a substantial wash away from glass.

3.7 CLEANING AND PROTECTION

A. Immediately after installation remove nonpermanent labels and clean surfaces.

B. Protect glass from contact with contaminating substances resulting from construction operations. Examine glass surfaces adjacent to or below exterior concrete and other masonry surfaces at frequent intervals during construction, but not less than once a month, for buildup of dirt, scum, alkaline deposits, or stains.

1. If, despite such protection, contaminating substances do come into contact with glass, remove substances immediately as recommended in writing by glass manufacturer. Remove and replace glass that cannot be cleaned without damage to coatings.

C. Remove and replace glass that is damaged during construction period.

D. Wash glass on both exposed surfaces not more than four days before date scheduled for inspections that establish date of Substantial Completion. Wash glass as recommended in writing by glass manufacturer.

3.8 MONOLITHIC GLASS SCHEDULE

A. Glass Type (Gl-1): Clear fully tempered float glass.

1. Minimum Thickness: 6 mm.
2. Safety glazing required.

B. Provide Gl-1 at Interior Doors and Sidelights.

3.9 LAMINATED GLASS SCHEDULE

A. Glass Type LG-1 (At Vestibule Doors and Transoms): Clear laminated glass with two plies of annealed float glass.

1. Minimum Thickness of Each Glass Ply: 6 mm.
2. Interlayer Thickness: 0.030 inch.
3. Safety glazing required.

3.10 INSULATING GLASS SCHEDULE

A. Glass Type (IG-1): Pyrolytic-coated, self-cleaning, low-maintenance, low-E coated, clear insulating glass.

1. Overall Unit Thickness: 1 inch.
2. Minimum Thickness of Each Glass Lite: 6 mm.
3. Outdoor Lite: Pyrolytic-coated, self-cleaning, low-maintenance, clear fully tempered float glass.
4. Interspace Content: Air.
5. Indoor Lite: Clear heat-strengthened float glass.
6. Low-E Coating: Pyrolytic on second or third surface. Equal to Solarban 60.
7. Total Solar Energy Transmission: 34 percent.
8. Shading Coefficient: 0.45 maximum.
9. Visible Light Transmittance: 70 percent minimum.
10. Solar Heat Gain Coefficient: 0.39 maximum.
11. U values:
    a. Winter Night Time: 0.29
    b. Summer Day Time: 0.27.

B. Glass Type (IG-2): At Exterior Doors and Transoms/Sidelights, same as IG-1 except:

1. High Impact Insulated Units: Insulated glass in select areas constructed using 3/8 inch laminated glass for exterior pane and 1/4 inch tempered glass with Low E coating for interior pane.

END OF SECTION

SECTION 088813

FIRE-RESISTANT GLAZING

PART 1 - GENERAL

1.1 RELATED DOCUMENTS

A. Drawings and general provisions of the Contract, including General and Supplementary Conditions and Division 01 Specification Sections, apply to this Section.

1.2 SUMMARY

A. Section Includes:

1. Fire-protection-rated glazing.

1.3 DEFINITIONS

A. Glass Manufacturers: Firms that produce primary glass, fabricated glass, or both, as defined in referenced glazing publications.

B. Glass Thicknesses: Indicated by thickness designations in millimeters according to ASTM C 1036.

1.4 COORDINATION

A. Coordinate glazing channel dimensions to provide necessary bite on glass, minimum edge and face clearances, and adequate sealant thicknesses, with reasonable tolerances.

1.5 ACTION SUBMITTALS

A. Product Data: For each type of product.

B. Glass Samples: For each type of glass product; 12 inches square.

C. Glazing Schedule: List glass types and thicknesses for each size opening and location. Use same designations indicated on Drawings.

1.6 INFORMATIONAL SUBMITTALS

A. Qualification Data: For installers and glass testing agency.

B. Product Certificates: For each type of glass and glazing product, from manufacturer.

C. Sample Warranties: For special warranties.

1.7 QUALITY ASSURANCE

A. Installer Qualifications: A qualified installer who employs glass installers for this Project who are certified under the National Glass Association's Certified Glass Installer Program.

1.8 DELIVERY, STORAGE, AND HANDLING

A. Protect glazing materials according to manufacturer's written instructions. Prevent damage to glass and glazing materials from condensation, temperature changes, direct exposure to sun, or other causes.

1.9 FIELD CONDITIONS

A. Environmental Limitations: Do not deliver or install fire-resistant glazing until spaces are enclosed and weathertight and temporary HVAC system is operating and maintaining ambient temperature conditions at occupancy levels during the remainder of the construction period.

1.10 WARRANTY

A. Manufacturer's Special Warranty on Laminated Glass: Manufacturer agrees to replace laminated-glass units that deteriorate within specified warranty period. Deterioration of laminated glass is defined as defects developed from normal use that are not attributed to glass breakage or to maintaining and cleaning laminated glass contrary to manufacturer's written instructions. Defects include edge separation, delamination materially obstructing vision through glass, and blemishes exceeding those allowed by referenced laminated-glass standard.

1. Warranty Period: Five years from date of Substantial Completion.

PART 2 - PRODUCTS

2.1 MANUFACTURERS

A. Source Limitations for Glass: Obtain from single source from single manufacturer for each glass type.

B. Source Limitations for Glazing Accessories: Obtain from single source from single manufacturer for each product and installation method.

2.2 PERFORMANCE REQUIREMENTS

A. General: Installed glazing systems shall withstand normal thermal movement and impact loads (where applicable) without failure, including loss or glass breakage attributable to the following: defective manufacture, fabrication, or installation; deterioration of glazing materials; or other defects in construction.

2.3 GLASS PRODUCTS, GENERAL

A. Safety Glazing Labeling: Permanently mark glazing with certification label of the Safety Glazing Certification Council or another certification agency acceptable to authorities having jurisdiction. Label shall indicate manufacturer's name, type of glass, glass thickness, and safety glazing standard with which glass complies.

2.4 GLASS PRODUCTS

A. Float Glass: ASTM C 1036, Type I, Quality-Q3, Class I (clear) unless otherwise indicated.

B. Tempered Float Glass: ASTM C 1048, Kind FT (fully tempered), Condition A (uncoated) unless otherwise indicated, Type I, Class I (clear) unless otherwise indicated, Quality-Q3.

1. Fabrication Process: By horizontal (roller-hearth) process with roll-wave distortion parallel to bottom edge of glass as installed unless otherwise indicated.

2.5 FIRE-PROTECTION-RATED GLAZING

A. Fire-Protection-Rated Glazing: Listed and labeled by a testing agency acceptable to authorities having jurisdiction, for fire-protection ratings indicated, based on positive-pressure testing according to NFPA 257 or UL 9, including the hose-stream test, and shall comply with NFPA 80.

1. Fire-protection-rated glazing required to have a fire-protection rating of 20 minutes shall be exempt from the hose-stream test.

B. Fire-Protection-Rated Glazing Labeling: Permanently mark fire-protection-rated glazing with certification label of a testing agency acceptable to authorities having jurisdiction. Label shall indicate manufacturer's name; test standard; whether glazing is permitted to be used in doors or openings; if permitted in openings, whether or not glazing has passed the hose-stream test; whether or not glazing meets 450 deg F temperature-rise limitation; and the fire-resistance rating in minutes.

C. Film-Faced Ceramic Glazing: Clear, ceramic flat glass; 5-mm thickness; faced on one surface with a clear glazing film; and complying with CPSC 16 CFR 1201, Category I and II.

1. Basis of Design Product: Subject to compliance with requirements, provide Technical Glass Products; FireLite NT, or comparable product by one of the following:

a. SCHOTT North America, Inc.; PYRAN Platinum F.
b. Keralite Select Filmed by Vetrotech USA.

2.6 GLAZING ACCESSORIES

A. Provide glazing gaskets, glazing sealants, glazing tapes, setting blocks, spacers, edge blocks, and other glazing accessories that are compatible with glazing products and each other and are approved by testing agencies that listed and labeled fire-resistant glazing products with which products are used for applications and fire-protection ratings indicated.

B. Glazing Sealants for Fire-Rated Glazing Products: Neutral-curing silicone glazing sealant complying with ASTM C 920, Type S, Grade NS, Class 50, Use NT. Comply with sealant and

glass manufacturers' written instructions for selecting glazing sealants suitable for applications indicated.

1. Manufacturers: Subject to compliance with requirements, available manufacturers offering products that may be incorporated into the Work include, but are not limited to the following:

   a. Dow Corning Corporation.
   b. GE Construction Sealants.
   c. Tremco Incorporated.

2. Colors of Exposed Glazing Sealants: As selected by Architect from manufacturer's full range.

C. Back-Bedding Mastic Glazing Tapes: Preformed, butyl-based, 100 percent solids elastomeric tape; nonstaining and nonmigrating in contact with nonporous surfaces; with or without spacer rod as recommended in writing by tape and glass manufacturers for application indicated; and complying with ASTM C 1281 and AAMA 800 for products indicated below:

   1. AAMA 804.3 tape, where indicated.
   2. AAMA 806.3 tape, for glazing applications in which tape is subject to continuous pressure.
   3. AAMA 807.3 tape, for glazing applications in which tape is not subject to continuous pressure.

D. Expanded Cellular Glazing Tapes: Closed-cell, PVC foam tapes; factory coated with adhesive on both surfaces; and complying with AAMA 800 for the following types:

   1. AAMA 810.1, Type 1, for glazing applications in which tape acts as the primary sealant.
   2. AAMA 810.1, Type 2, for glazing applications in which tape is used in combination with a full bead of liquid sealant.

2.7 MISCELLANEOUS GLAZING MATERIALS

A. General: Provide products of material, size, and shape complying with referenced glazing standard, requirements of manufacturers of glass and other glazing materials for application indicated, and with a proven record of compatibility with surfaces contacted in installation.

B. Cylindrical Glazing Sealant Backing: ASTM C 1330, Type O (open-cell material), of size and density to control glazing sealant depth and otherwise produce optimum glazing sealant performance.

C. Perimeter Insulation for Fire-Resistive Glazing: Product that is approved by testing agency that listed and labeled fire-resistant glazing product with which it is used for application and fire-protection rating indicated.

2.8 FABRICATION OF GLAZING UNITS

A. Fabricate glazing units in sizes required to fit openings indicated for Project, with edge and face clearances, edge and surface conditions, and bite complying with written instructions of product manufacturer and referenced glazing publications, to comply with system performance requirements.

PART 3 - EXECUTION

3.1 EXAMINATION

A. Examine framing, glazing channels, and stops, with Installer present, for compliance with manufacturing and installation tolerances, including those for size, squareness, and offsets at corners, and for compliance with minimum required face and edge clearances.

B. Proceed with installation only after unsatisfactory conditions have been corrected.

3.2 PREPARATION

A. Clean glazing channels and other framing members receiving glass immediately before glazing. Remove coatings not firmly bonded to substrates.

B. Examine glazing units to locate fire side and protected side. Label or mark units as needed so that fire side and protected side are readily identifiable. Do not use materials that leave visible marks in the completed work.

3.3 GLAZING, GENERAL

A. Use methods approved by testing agencies that listed and labeled fire-resistant glazing products.

B. Comply with combined written instructions of manufacturers of glass, sealants, gaskets, and other glazing materials unless more stringent requirements are indicated, including those in referenced glazing publications.

C. Protect glass edges from damage during handling and installation. Remove damaged glass from Project site and legally dispose of off Project site. Damaged glass is glass with edge damage or other imperfections that, when installed, could weaken glass and impair performance and appearance.

D. Apply primers to joint surfaces where required for adhesion of sealants, as determined by preconstruction testing.

E. Install setting blocks in sill rabbets, sized and located to comply with referenced glazing publications unless otherwise required by glass manufacturer. Set blocks in thin course of compatible sealant suitable for heel bead.

F. Do not exceed edge pressures stipulated by glass manufacturers for installing glass lites.

G. Provide spacers for glass lites where length plus width is larger than 50 inches.

1. Locate spacers directly opposite each other on both inside and outside faces of glass. Install correct size and spacing to preserve required face clearances unless gaskets and glazing tapes are used that have demonstrated ability to maintain required face clearances and to comply with system performance requirements.
2. Provide 1/8-inch minimum bite of spacers on glass and use thickness equal to sealant width. With glazing tape, use thickness slightly less than final compressed thickness of tape.

H. Provide edge blocking where indicated or needed to prevent glass lites from moving sideways in glazing channel, as recommended in writing by glass manufacturer and according to requirements in referenced glazing publications.

I. Set glass lites with proper orientation so that coatings face fire side or protected side as specified.

J. Where wedge-shaped gaskets are driven into one side of channel to pressurize sealant or gasket on opposite side, provide adequate anchorage so gasket cannot walk out when installation is subjected to movement.

K. Square cut wedge-shaped gaskets at corners and install gaskets in a manner recommended by gasket manufacturer to prevent corners from pulling away; seal corner joints and butt joints with sealant recommended by gasket manufacturer.

3.4 TAPE GLAZING

A. Position tapes on fixed stops so that, when compressed by glass, their exposed edges are flush with or protrude slightly above sightline of stops.

B. Install tapes continuously, but not necessarily in one continuous length. Do not stretch tapes to make them fit opening.

C. Cover vertical framing joints by applying tapes to heads and sills first and then to jambs. Cover horizontal framing joints by applying tapes to jambs and then to heads and sills.

D. Place joints in tapes at corners of opening with adjoining lengths butted together, not lapped. Seal joints in tapes with compatible sealant approved by tape manufacturer.

E. Do not remove release paper from tape until right before each glazing unit is installed.

F. Center glass lites in openings on setting blocks and press firmly against tape by inserting dense compression gaskets formed and installed to lock in place against faces of removable stops. Start gasket applications at corners and work toward centers of openings.

3.5 GASKET GLAZING (DRY)

A. Cut compression gaskets to lengths recommended by gasket manufacturer to fit openings exactly, with allowance for stretch during installation.

B. Insert soft compression gasket between glass and frame or fixed stop, so it is securely in place with joints miter cut and bonded together at corners.

C. Installation with Drive-in Wedge Gaskets: Center glass lites in openings on setting blocks and press firmly against soft compression gasket by inserting dense compression gaskets formed and installed to lock in place against faces of removable stops. Start gasket applications at corners and work toward centers of openings.

D. Install gaskets so they protrude past face of glazing stops.

3.6 SEALANT GLAZING (WET)

A. Install continuous spacers, or spacers combined with cylindrical sealant backing, between glass lites and glazing stops to maintain glass face clearances. Secure spacers or spacers and backings in place and in position to control depth of installed sealant relative to edge clearance for optimum sealant performance.

B. Force sealants into glazing channels to eliminate voids and to ensure complete wetting or bond of sealant to glass and channel surfaces.

C. Tool exposed surfaces of sealants to provide a substantial washaway from glass.

3.7 CLEANING AND PROTECTION

A. Immediately after installation, remove nonpermanent labels and clean surfaces.

B. Protect glass from contact with contaminating substances resulting from construction operations. Examine glass surfaces adjacent to or below exterior concrete and other masonry surfaces at frequent intervals during construction, but not less than once a month, for buildup of dirt, scum, alkaline deposits, or stains.

1. If, despite such protection, contaminating substances do come into contact with glass, remove substances immediately as recommended in writing by glass manufacturer.

C. Remove and replace glass that is damaged during construction period.

D. Wash glass on both exposed surfaces in each area of Project not more than four days before date scheduled for inspections that establish date of Substantial Completion. Wash glass as recommended in writing by glass manufacturer.

END OF SECTION

ROOM FINISH SCHEDULE - COLOR LEGEND

MATERIAL	MANUFACTURER	COLOR NUMBER	COLOR NAME	DESCRIPTION
CPT-1	SHAW CONTRACT	18504	TEMPT TILE, TEASE	24" X 24" TILE, RANDOM INSTALLATION
CPT-2	SHAW CONTRACT	86535	THINK TILE, EXPERIENCE	24" X 24" TILE, RANDOM INSTALLATION
CPT-3	SHAW CONTRACT	86325	IMPACT TILE, LIME	24" X 24" TILE, MONOLITHIC INSTALLATION
CPT-4	SHAW CONTRACT	86405	IMPACT TILE, TEAL	24" X 24" TILE, MONOLITHIC INSTALLATION
CPT-5	SHAW CONTRACT	86535	ENGAGE TILE, EXPERIENCE TEAL	24" X 24" TILE, RANDOM INSTALLATION
CPT-6	SHAW CONTRACT	86536	ENGAGE TILE, EXPERIENCE LIME	24" X 24" TILE, RANDOM INSTALLATION
CPT-7	SHAW CONTRACT	86515	ENGAGE TILE, NUANCE ORANGE	24" X 24" TILE, RANDOM INSTALLATION
VCT-1	ARMSTRONG	51810	STANDARD EXCELON, WASHED LINEN	-
VCT-2	ARMSTRONG	T3526	MIGRATIONS BBT, BLUE WATERS	-
VCT-3	ARMSTRONG	T3522	MIGRATIONS BBT, LEMON SQUEEZE	-
VCT-4	ARMSTRONG	T3527	MIGRATIONS BBT, GREEN GRASS	-
VCT-5	ARMSTRONG	T3523	MIGRATIONS BBT, ORANGE PEEL	-
LVT-1	ARMSTRONG	NA1GT861	NATURAL CREATIONS MYSTIX, CUSTOM COLOR	ALT. BID IN LIEU OF VCT-1, 18" X 36" TILE
LVT-2	ARMSTRONG	NA623	NATURAL CREATIONS MYSTIX, MIXER BLUE HAWAIIAN	BASE BID IN C115 AND C116, 6" X 36" TILE ALT. BID IN LIEU OF VCT-2, 18" X 18" TILE
LVT-3	ARMSTRONG	NA616	NATURAL CREATIONS MYSTIX, MIXER PINEAPPLE JUICE	ALT. BID IN LIEU OF VCT-3, 18" X 18" TILE
LVT-4	ARMSTRONG	NA626	NATURAL CREATIONS MYSTIX, MIXER APPLETINI	BASE BID IN C115 AND C116, 6" X 36" TILE ALT. BID IN LIEU OF VCT-4, 18" X 18" TILE
LVT-5	ARMSTRONG	NA617	NATURAL CREATIONS MYSTIX, MIXER ORANGE SODA	ALT. BID IN LIEU OF VCT-5, 18" X 18" TILE
LVT-6	---	---	---	NOT USED
LVT-7	ARMSTRONG	NA931	NATURAL CREATIONS MYSTIX, SPETTRO CASPIAN SAND	ALT. BID IN LIEU OF VCT-1, 18" X 36" TILE IN ROOM B122 ONLY
LVT-8	ARMSTRONG	NA170	NATURAL CREATIONS ARBOR-ART, SOLANO MAPLE HONEYSUCKLE	BASE BID IN C115, C116, C117, C118, C119, C120, C125 AND C126, 4" X 36" TILE
LVT-9	ARMSTRONG	NA225	NATURAL CREATIONS ARBOR-ART, TUSTIN NAVALE SADDLE RUST	BASE BID IN C115 AND C116, 6" X 36" TILE
RB-1	JOHNSONITE	280	SHORELINE	-
RT-1	JOHNSONITE	LF7	MICROTONE, BLUEBERRY	HAMMERED TEXTURE

ROOM FINISH SCHEDULE - COLOR LEGEND

MATERIAL	MANUFACTURER	COLOR NUMBER	COLOR NAME	DESCRIPTION
RTD-1	JOHNSONITE	LF7	MICROTONE, BLUEBERRY	HAMMERED TEXTURE
RTD-2	JOHNSONITE	LB2	MICROTONE, GREAT PLANES	HAMMERED TEXTURE
EP-1	GENERAL POLYMERS	341	CERAMIC CARPET, SAHARA	-
PT-1	DAL TILE	VL74	VOLUME 1.0, REVERB ASH	6" X 6" TILE, GROUT COLOR #183 CHATEAU BY CUSTOM BUILDING PRODUCTS
PTB-1	DAL TILE	VL74	VOLUME 1.0, REVERB ASH	6" x 12" COVE BASE TILE, GROUT COLOR #183 CHATEAU BY CUSTOM BUILDING PRODUCTS
QT-1	DAL TILE	0Q42	QUARRY TILE, ARID GRAY	6" X 6" TILE
PTD-1	SHERWIN WILLIAMS	SW7010	WHITE DUCK	-
PTD-2	SHERWIN WILLIAMS	SW7038	TONY TAUPE	-
PTD-3	SHERWIN WILLIAMS	SW6811	HONORABLE BLUE	-
PTD-4	SHERWIN WILLIAMS	SW6388	BEE	-
PTD-5	SHERWIN WILLIAMS	SW6718	OVERT GREEN	-
PTD-6	SHERWIN WILLIAMS	SW6642	RHUMBA ORANGE	-
PTD-7	SHERWIN WILLIAMS	SW6861	RADISH	-
CT-1	DAL TILE	X735	MATTE, ALMOND	6" X 6" TILE AND 6" X 6" BULLNOSE TOP COURSE AT WAINSCOT, GROUT COLOR #172 URBAN PUTTY BY CUSTOM BUILDING PRODUCTS
CT-2	DAL TILE	Q174	SEMI-GLOSS COLOR TRENDS, SEA BREEZE	6" X 6" TILE, GROUT COLOR #172 URBAN PUTTY BY CUSTOM BUILDING PRODUCTS
CT-3	AMERICAN OLEAN	Q075	BRIGHTS, LEMON ZEST	6" X 6" TILE, GROUT COLOR #172 URBAN PUTTY BY CUSTOM BUILDING PRODUCTS
CT-4	DAL TILE	Q170	SEMI-GLOSS COLOR TRENDS, GO GREEN	6" X 6" TILE, GROUT COLOR #172 URBAN PUTTY BY CUSTOM BUILDING PRODUCTS

ROOM FINISH SCHEDULE - COLOR LEGEND

MATERIAL	MANUFACTURER	COLOR NUMBER	COLOR NAME	DESCRIPTION
CT-5	DAL TILE	Q151	SEMI-GLOSS COLOR TRENDS, TOTALLY TANGERINE	6" X 6" TILE, GROUT COLOR #172 URBAN PUTTY BY CUSTOM BUILDING PRODUCTS
CT-6	DAL TILE	0161	SEMI-GLOSS, URBAN PUTTY	6" X 6" TILE, GROUT COLOR #172 URBAN PUTTY BY CUSTOM BUILDING PRODUCTS
AP-1	DL COUCH	A156-310	VERSA, EMBARCADERO, MIDNIGHT EXPRESS	ACOUSTICAL WALL ABSORBER PANEL VINYL WALLCOVERING, PERFORATED
AP-2	DL COUCH	A156-791	VERSA, EMBARCADERO, SUNGLOW	ACOUSTICAL WALL ABSORBER PANEL VINYL WALLCOVERING, PERFORATED
AP-3	DL COUCH	A156-274	VERSA, EMBARCADERO, GRANNY SMITH APPLE	ACOUSTICAL WALL ABSORBER PANEL VINYL WALLCOVERING, PERFORATED
AP-4	DL COUCH	A156-482	VERSA, EMBARCADERO, PIZAZZ	ACOUSTICAL WALL ABSORBER PANEL VINYL WALLCOVERING, PERFORATED
PL-1	WILSONART	7941K-18	TAN ECHO WITH LINEARITY FINISH AND AEON	3MM MATCHING EDGE BAND ON CABINETS BY WILSONART
PL-2	WILSONART	4990-38	FLAX LINEN	3MM EDGE BAND ON CABINETS #2422 GREY BY DOELLKEN WOODTAPE
SS-1	CORIAN	---	CONCRETE	TYPICAL WINDOW STOOLS AND RECEPTION DESK COUNTER
ACT-1	ARMSTRONG	1714	WHITE	2' X 4' FINE FISSURED HIGH NRC, SQUARE LAY-IN PANELS
ACT-2	ARMSTRONG	1729	WHITE	2' X 4' FINE FISSURED, SQUARE LAY-IN PANELS
ACT-3	ARMSTRONG	1713	WHITE	2' X 2' FINE FISSURED HIGH NRC, SQUARE LAY-IN PANELS
ACT-4	ARMSTRONG	1728	WHITE	2' X 2' FINE FISSURED, SQUARE LAY-IN PANELS
ACT-5	NUDO	---	WHITE	2' X 4' SQUARE LAY-IN PANELS
ACT-6	ARMSTRONG	2820	COLORATIONS COLOR, CUSTOM COLOR TO MATCH PTD-4	2' X 2' CALLA, SQUARE LAY-IN PANELS WITH GRID TO MATCH COLORATIONS COLOR
ACT-7	ARMSTRONG	2820	COLORATIONS COLOR, KIWI	2' X 2' CALLA, SQUARE LAY-IN PANELS WITH GRID TO MATCH COLORATIONS COLOR

ROOM FINISH SCHEDULE - COLOR LEGEND

MATERIAL	MANUFACTURER	COLOR NUMBER	COLOR NAME	DESCRIPTION
ACT-8	ARMSTRONG	2820	COLORATIONS COLOR, CUSTOM COLOR TO MATCH PTD-6	2' X 2' CALLA, SQUARE LAY-IN PANELS WITH GRID TO MATCH COLORATIONS COLOR
AC-1	ARMSTRONG	---	SOUNDSCAPES CANOPIES, HILL CANOPY, COLORATIONS COLOR, CUSTOM COLOR TO MATCH PTD-6	ACOUSTICAL CANOPIES, ALTERNATE BID
AC-2	ARMSTRONG	---	SOUNDSCAPES SHAPES, SQUARE, COLORATIONS COLOR, KIWI	ACOUSTICAL CLOUDS, ALTERNATE BID
AC-3	ARMSTRONG	---	SOUNDSCAPES SHAPES, SMALL RECTANGLE, COLORATIONS COLOR, KIWI	ACOUSTICAL CLOUDS, ALTERNATE BID
AC-4	ARMSTRONG	---	SOUNDSCAPES SHAPES, SMALL RECTANGLE, COLORATIONS COLOR, CUSTOM COLOR TO MATCH PTD-6	ACOUSTICAL CLOUDS, ALTERNATE BID
AC-5	ARMSTRONG	---	SOUNDSCAPES SHAPES, SMALL RECTANGLE, COLORATIONS COLOR, CUSTOM COLOR TO MATCH PTD-4	ACOUSTICAL CLOUDS, ALTERNATE BID
---	CLARDIGE	KL490	RECTORY	VINYL ON TACK BOARDS AND EXHIBIT RAILS
---	CS ACROVYN	934	PEARL	CORNER GUARDS, TYPICAL UNLESS NOTED OTHERWISE
---	CS ACROVYN	929	OYSTER GRAY	CORNER GUARDS (CG-2), TYPICAL IN COMMONS A116, A130, A216, A230 AND B218
---	DESIGNTEX	8041-701	SPROUT, PEACH	CUBICLE/PRIVACY CURTAINS
---	INTERFACE FABRIC	481	PANEL 2100, FR701, PEARL	TACKABLE WALL PANELS
---	KM FABRICS	1118	NAVY	STAGE CURTAIN
---	MECHOSHADE	1504	1500 SERIES, BLACK/BROWN	WINDOW SHADE FABRIC TYPICAL AT EXTERIOR WINDOW TYPES W1, W2 (EXCEPT AT STAIR A-S1), W3 (EXCEPT STAIR A-S2), W4 (EXCEPT STAIR B-S1), AND W5
---	MECHOSHADE	254	CHELSEA BLACKOUT, SHALE	WINDOW SHADE FABRIC AT HMW-2 AND HMW-3 IN B121 WITH GRAPHITE COLORED BACKING, GRAY FASCIA

ROOM FINISH SCHEDULE - COLOR LEGEND

MATERIAL	MANUFACTURER	COLOR NUMBER	COLOR NAME	DESCRIPTION
---	MODERNFOLD	290 (H)	HARBORWEAVE II, ROCKPORT	VINYL ON FOLDING PARTITIONS WITH SMOKE GRAY FRAME
---	MODERNFOLD/ WILSONART	4990-38	FLAX LINEN	LAMINATE ON LOWER PORTION OF FOLDING PARTITION WITH SMOKE GRAY FRAME IN C115 AND C116
---	PENCO	12	TAWNY TAN	METAL LOCKERS
---	PERFORMANCE SPORTS SYSTEMS	W04	NAVY BLUE	WALL PADDING
---	SCRANTON PRODUCTS	---	BLUEBERRY	PLASTIC TOILET PARTITIONS
---	VT INDUSTRIES	WH02	WHEAT FINISH ON RED OAK	TYPICAL DOOR AND MILLWORK WOOD STAIN FINISH

GENERAL NOTES:

1. WHERE MULTIPLE FINISHES/COLORS ARE LISTED, REFER TO DRAWINGS FOR PATTERN AND/OR LOCATIONS OF EACH FINISH/COLOR.
2. SEE A9 DRAWINGS FOR TILE WAINSCOT HEIGHTS AND TILE WALL PATTERNS.
3. SEE A10 DRAWINGS FOR FLOOR PATTERNS, LOCATIONS/TRANSITIONS OF FLOOR MATERIALS, AND ACCENT PAINT LOCATIONS AND COLORS.
4. SEE A11 DRAWINGS AND ELECTRICAL DRAWINGS FOR CEILING INFORMATION.
5. TYPICAL BULKHEAD PAINT TO MATCH ADJACENT WALL PAINT, UNLESS NOTED OTHERWISE. SEE A11 DRAWINGS FOR BULKHEAD PAINT NOTES.
6. TYPICAL HOLLOW METAL FRAME AND HOLLOW METAL DOOR PAINT TO BE PTD-2.
7. WHERE EXPOSED STRUCTURE IS SCHEDULED TO BE PAINTED, PAINT ALL DUCTWORK, TRUSSES, PIPING AND MISCELLANEOUS EQUIPMENT AS SCHEDULED.
8. WHERE MECHANICAL LOUVERS AND DIFFUSERS OCCUR IN WALLS AND BULKHEADS, THEY SHALL BE FINISHED TO MATCH THE ADJACENT FINISH.
9. TYPICAL WOOD STAIN TO MATCH WOOD DOOR STAIN.

ABBREVIATIONS:

AP	ACOUSTICAL PANEL	QT	QUARRY TILE
CPT	CARPET TILE	RB	RUBBER BASE
CT	CERAMIC TILE	RT	RUBBER TILE
EP	EPOXY RESINOUS FLOORING	RTD	RUBBER TREAD
LVT	LUXURY VINYL TILE	S CONC	SEALED CONCRETE
PL	PLASTIC LAMINATE	SS	SOLID SURFACING
PT	PORCELAIN TILE	VCT	VINYL COMPOSITION TILE
PTB	PORCELAIN TILE BASE	WD	WOOD
PTD	PAINT	WOM	WALK-OFF MAT

SECTION 092216

NON-STRUCTURAL METAL FRAMING

PART 1 - GENERAL

1.1 RELATED DOCUMENTS

A. Drawings and general provisions of the Contract, including General and Supplementary Conditions and Division 01 Specification Sections, apply to this Section.

1.2 SUMMARY

A. Section Includes:

1. Non-load-bearing steel framing systems for interior partitions, ceilings, bulkheads and soffits.

1.3 ACTION SUBMITTALS

A. Product Data: For each type of product.

1.4 INFORMATIONAL SUBMITTALS

A. Evaluation Reports: For embossed steel studs and tracks, firestop tracks, post-installed anchors, and power-actuated fasteners, from ICC-ES or other qualified testing agency acceptable to authorities having jurisdiction.

1.5 QUALITY ASSURANCE

A. Code-Compliance Certification of Studs and Tracks: Provide documentation that framing members are certified according to the product-certification program of the Certified Steel Stud Association, the Steel Framing Industry Association, or the Steel Stud Manufacturers Association.

PART 2 - PRODUCTS

2.1 PERFORMANCE REQUIREMENTS

A. Fire-Test-Response Characteristics: For fire-resistance-rated assemblies that incorporate non-load-bearing steel framing, provide materials and construction identical to those tested in assembly indicated, according to ASTM E 119 by an independent testing agency.

B. STC-Rated Assemblies: For STC-rated assemblies, provide materials and construction identical to those tested in assembly indicated, according to ASTM E 90 and classified according to ASTM E 413 by an independent testing agency in accordance with UL assembly.

2.2 FRAMING SYSTEMS

A. Framing Members, General: Comply with ASTM C 754 for conditions indicated.

1. Steel Sheet Components: Comply with ASTM C 645 requirements for metal unless otherwise indicated.
2. Protective Coating: ASTM A 653/A 653M, G60, hot-dip galvanized unless otherwise indicated.

B. Studs and Runners: ASTM C 645. Use either steel studs and runners or dimpled steel studs and runners.

1. Steel Studs and Runners:

a. Manufacturers: Subject to compliance with requirements, available manufacturers offering products that may be incorporated into the Work include, but are not limited to the following:

1) ClarkDietrich Building Systems.
2) MarinoWARE.
3) Steel Network, Inc. (The).
4) Super Stud Building Products, Inc.
5) Telling Industries.

b. Minimum Base-Metal Thickness: As indicated on Drawings.
c. Depth: As indicated on Drawings.

2. Embossed Steel Studs and Tracks: Roll-formed and embossed with surface deformations to stiffen the framing members so that they are structurally equivalent to conventional ASTM C 645 steel studs and tracks.

a. Manufacturers: Subject to compliance with requirements, available manufacturers offering products that may be incorporated into the Work include, but are not limited to the following:

1) ClarkDietrich Building Systems.
2) MarinoWARE.
3) Steel Network, Inc. (The).
4) Super Stud Building Products, Inc.
5) Telling Industries.

b. Minimum Base-Metal Thickness: As indicated on Drawings.
c. Depth: As indicated on Drawings.

C. Slip-Type Head Joints: Where indicated, provide one of the following:

1. Clip System: Clips designed for use in head-of-wall deflection conditions that provide a positive attachment of studs to runners while allowing 1-1/2-inch minimum vertical movement.

a. Manufacturers: Subject to compliance with requirements, available manufacturers offering products that may be incorporated into the Work include, but are not limited to the following:

1) ClarkDietrich Building Systems.

2) Fire Trak Corp.
3) Steel Network, Inc. (The).
4) Super Stud Building Products Inc.

2. Single Long-Leg Runner System: ASTM C 645 top runner with 2-inch-deep flanges in thickness not less than indicated for studs, installed with studs friction fit into top runner and with continuous bridging located within 12 inches of the top of studs to provide lateral bracing.
3. Double-Runner System: ASTM C 645 top runners, inside runner with 2-inch-deep flanges in thickness not less than indicated for studs and fastened to studs, and outer runner sized to friction fit inside runner.
4. Deflection Track: Steel sheet top runner manufactured to prevent cracking of finishes applied to interior partition framing resulting from deflection of structure above; in thickness not less than indicated for studs and in width to accommodate depth of studs.

a. Products: Subject to compliance with requirements, available products that may be incorporated into the Work include, but are not limited to, the following:

1) ClarkDietrich Building Systems; SLP-TRK Slotted Deflection Track.
2) MBA Building Supplies; FlatSteel Deflection Track or Slotted Deflecto Track.
3) Steel Network Inc. (The); VertiClip SLD or VertiTrack VTD Series.
4) Telling Industries; Vertical Slip Track or Vertical Slip Track II.

D. Firestop Tracks: Top track manufactured to allow partition heads to expand and contract with movement of structure while maintaining continuity of fire-resistance-rated assembly indicated; in thickness not less than indicated for studs and in width to accommodate depth of studs.

1. Manufacturers: Subject to compliance with requirements, available manufacturers offering products that may be incorporated into the Work include, but are not limited to, the following:

a. Blazeframe Industries.
b. CEMCO; California Expanded Metal Products Co.
c. ClarkDietrich Building Systems.
d. Fire Trak Corp.
e. MarinoWARE.
f. Steel Network, Inc. (The).

E. Flat Strap and Backing Plate: Steel sheet for blocking and bracing in length and width indicated.

1. Minimum Base-Metal Thickness: Per UL Design Standards, or indicated on Drawings.

F. Cold-Rolled Channel Bridging: Steel, 0.053-inch minimum base-metal thickness, with minimum 1/2-inch-wide flanges.

1. Depth: As indicated on Drawings.
2. Clip Angle: Not less than 1-1/2 by 1-1/2 inches, 0.068-inch-thick, galvanized steel.

G. Hat-Shaped, Rigid Furring Channels: ASTM C 645.

1. Minimum Base-Metal Thickness: Per UL Design Standards, or indicated on Drawings.
2. Depth: As indicated on Drawings.

H. Resilient Furring Channels: 1/2-inch-deep, steel sheet members designed to reduce sound transmission.

1. Configuration: Asymmetrical or hat shaped.

I. Cold-Rolled Furring Channels: 0.053-inch uncoated-steel thickness, with minimum 1/2-inch-wide flanges.

1. Depth: As indicated on Drawings.
2. Furring Brackets: Adjustable, corrugated-edge type of steel sheet with minimum uncoated-steel thickness of 0.033 inch.
3. Tie Wire: ASTM A 641/A 641M, Class 1 zinc coating, soft temper, 0.062-inch-diameter wire, or double strand of 0.048-inch-diameter wire.

J. Z-Shaped Furring: With slotted or nonslotted web, face flange of 1-1/4 inches, wall attachment flange of 7/8 inch, minimum uncoated-metal thickness of 0.018 inch, and depth required to fit insulation thickness indicated.

2.3 AUXILIARY MATERIALS

A. General: Provide auxiliary materials that comply with referenced installation standards.

1. Fasteners for Metal Framing: Of type, material, size, corrosion resistance, holding power, and other properties required to fasten steel members to substrates.

B. Isolation Strip at Exterior Walls: Provide one of the following:

1. Asphalt-Saturated Organic Felt: ASTM D 226, Type I (No. 15 asphalt felt), nonperforated.
2. Foam Gasket: Adhesive-backed, closed-cell vinyl foam strips that allow fastener penetration without foam displacement, 1/8 inch thick, in width to suit steel stud size.

PART 3 - EXECUTION

3.1 EXAMINATION

A. Examine areas and substrates, with Installer present, and including welded hollow-metal frames, cast-in anchors, and structural framing, for compliance with requirements and other conditions affecting performance of the Work.

B. Proceed with installation only after unsatisfactory conditions have been corrected.

3.2 PREPARATION

A. Suspended Assemblies: Coordinate installation of suspension systems with installation of overhead structure to ensure that inserts and other provisions for anchorages to building structure have been installed to receive hangers at spacing required to support the Work and that hangers will develop their full strength.

1. Furnish concrete inserts and other devices indicated to other trades for installation in advance of time needed for coordination and construction.

B. Coordination with Sprayed Fire-Resistive Materials:

1. Before sprayed fire-resistive materials are applied, attach offset anchor plates or ceiling tracks to surfaces indicated to receive sprayed fire-resistive materials. Where offset anchor plates are required, provide continuous plates fastened to building structure not more than 24 inches o.c.
2. After sprayed fire-resistive materials are applied, remove them only to extent necessary for installation of non-load-bearing steel framing. Do not reduce thickness of fire-resistive materials below that are required for fire-resistance ratings indicated. Protect adjacent fire-resistive materials from damage.

3.3 INSTALLATION, GENERAL

A. Installation Standard: ASTM C 754.

1. Gypsum Board Assemblies: Also comply with requirements in ASTM C 840 that apply to framing installation.

B. Install framing and accessories plumb, square, and true to line, with connections securely fastened.

C. Install supplementary framing, and blocking to support fixtures, equipment services, heavy trim, grab bars, toilet accessories, furnishings, or similar construction.

D. Install bracing at terminations in assemblies.

E. Do not bridge building control and expansion joints with non-load-bearing steel framing members. Frame both sides of joints independently.

3.4 INSTALLING FRAMED ASSEMBLIES

A. Install framing system components according to spacings indicated, but not greater than spacings required by referenced installation standards for assembly types.

B. Where studs are installed directly against exterior masonry walls or dissimilar metals at exterior walls, install isolation strip between studs and exterior wall.

C. Install studs so flanges within framing system point in same direction.

D. Install tracks (runners) at floors and overhead supports. Extend framing full height to structural supports or substrates above suspended ceilings except where partitions are indicated to terminate at suspended ceilings. Continue framing around ducts penetrating partitions above ceiling.

1. Slip-Type Head Joints: Where framing extends to overhead structural supports, install to produce joints at tops of framing systems that prevent axial loading of finished assemblies.
2. Door Openings: Screw vertical studs at jambs to jamb anchor clips on door frames; install runner track section (for cripple studs) at head and secure to jamb studs.

    a. Install two studs at each jamb unless otherwise indicated.
    b. Install cripple studs at head adjacent to each jamb stud, with a minimum 1/2-inch clearance from jamb stud to allow for installation of control joint in finished assembly.

c. Extend jamb studs through suspended ceilings and attach to underside of overhead structure.

3. Other Framed Openings: Frame openings other than door openings the same as required for door openings unless otherwise indicated. Install framing below sills of openings to match framing required above door heads.
4. Fire-Resistance-Rated Partitions: Install framing to comply with fire-resistance-rated assembly indicated and support closures and to make partitions continuous from floor to underside of solid structure.

   a. Firestop Track: Where indicated, install to maintain continuity of fire-resistance-rated assembly indicated.

5. Sound-Rated Partitions: Install framing to comply with sound-rated assembly indicated.
6. Curved Partitions:

   a. Bend track to uniform curve and locate straight lengths so they are tangent to arcs.
   b. Begin and end each arc with a stud, and space intermediate studs equally along arcs. On straight lengths of no fewer than two studs at ends of arcs, place studs 6 inches o.c.

E. Direct Furring:

1. Screw to framing.
2. Attach to concrete or masonry with stub nails, screws designed for masonry attachment, or powder-driven fasteners spaced 24 inches o.c.

F. Z-Furring Members:

1. Erect insulation, specified in Section 072100 "Thermal Insulation," vertically and hold in place with Z-furring members spaced 24 inches o.c.
2. Except at exterior corners, securely attach narrow flanges of furring members to wall with concrete stub nails, screws designed for masonry attachment, or powder-driven fasteners spaced 24 inches o.c.
3. At exterior corners, attach wide flange of furring members to wall with short flange extending beyond corner; on adjacent wall surface, screw-attach short flange of furring channel to web of attached channel. At interior corners, space second member no more than 12 inches from corner and cut insulation to fit.

G. Installation Tolerance: Install each framing member so fastening surfaces vary not more than 1/8 inch from the plane formed by faces of adjacent framing.

END OF SECTION

SECTION 092900

GYPSUM BOARD

PART 1 - GENERAL

1.1 RELATED DOCUMENTS

A. Drawings and general provisions of the Contract, including General and Supplementary Conditions and Division 01 Specification Sections, apply to this Section.

1.2 SUMMARY

A. Section Includes:

1. Interior gypsum board.
2. Tile backing board.

1.3 ACTION SUBMITTALS

A. Product Data: For each type of product.

B. Samples: For the following products:

1. Trim Accessories: Full-size Sample in 12-inch-long length for each trim accessory indicated.

C. Samples for Verification: For the following products:

1. Trim Accessories: Full-size Sample in 12-inch-long length for each trim accessory indicated.

1.4 DELIVERY, STORAGE, AND HANDLING

A. Store materials inside under cover and keep them dry and protected against weather, condensation, direct sunlight, construction traffic, and other potential causes of damage. Stack panels flat and supported on risers on a flat platform to prevent sagging.

1.5 FIELD CONDITIONS

A. Environmental Limitations: Comply with ASTM C 840 requirements or gypsum board manufacturer's written recommendations, whichever are more stringent.

B. Do not install interior products until installation areas are enclosed and conditioned.

C. Do not install panels that are wet, moisture damaged, and mold damaged.

1. Indications that panels are wet or moisture damaged include, but are not limited to, discoloration, sagging, or irregular shape.
2. Indications that panels are mold damaged include, but are not limited to, fuzzy or splotchy surface contamination and discoloration.

PART 2 - PRODUCTS

2.1 PERFORMANCE REQUIREMENTS

A. Fire-Resistance-Rated Assemblies: For fire-resistance-rated assemblies, provide materials and construction identical to those tested in assembly indicated according to ASTM E 119 by an independent testing agency.

B. STC-Rated Assemblies: For STC-rated assemblies, provide materials and construction identical to those tested in assembly indicated according to ASTM E 90 and classified according to ASTM E 413 by an independent testing agency.

2.2 GYPSUM BOARD, GENERAL

A. Size: Provide in maximum lengths and widths available that will minimize joints in each area and that correspond with support system indicated.

2.3 INTERIOR GYPSUM BOARD

A. Abuse-Resistant Gypsum Board: ASTM C 1396/C 1396M gypsum board, tested according to ASTM C 1629/C 1629M.

1. Basis of Design Product Subject to compliance with requirements, provide National Gypsum Company; Gold Bond BRAND Hi-Abuse® XP Gypsum Board, or comparable product by one of the following:

   a. CertainTeed Corporation.
   b. Continental Building Products, LLC.
   c. Georgia-Pacific Gypsum LLC.
   d. USG Corporation.

2. Core: 5/8 inch, Type X.
3. Surface Abrasion: ASTM C 1629/C 1629M, meets or exceeds Level 2 requirements.
4. Indentation: ASTM C 1629/C 1629M, meets or exceeds Level 1 requirements.
5. Soft-Body Impact: ASTM C 1629/C 1629M, meets or exceeds Level 1 requirements.
6. Long Edges: Tapered.
7. Mold and Moisture Resistance: ASTM D 3273, score of 10 as rated according to ASTM D 3274.

2.4 TILE BACKING PANELS

A. Cementitious Backer Units: ANSI A118.9 and ASTM C 1288 or ASTM C 1325, with manufacturer's standard edges.

1. Manufacturers: Subject to compliance with requirements, available manufacturers offering products that may be incorporated into the Work include, but are not limited to the following:

    a. CertainTeed Corporation.
    b. Custom Building Products.
    c. James Hardie Building Products, Inc.
    d. National Gypsum Company.
    e. USG Corporation.

2. Thickness: 5/8 inch.

2.5 TRIM ACCESSORIES

A. Interior Trim: ASTM C 1047.

1. Material: Galvanized or aluminum-coated steel sheet, rolled zinc, plastic, or paper-faced galvanized steel sheet.
2. Shapes:

    a. Cornerbead.
    b. LC-Bead: J-shaped; exposed long flange receives joint compound.
    c. L-Bead: L-shaped; exposed long flange receives joint compound.
    d. U-Bead: J-shaped; exposed short flange does not receive joint compound.

B. Aluminum Trim: Extruded accessories of profiles and dimensions indicated.

1. Manufacturers: Subject to compliance with requirements, available manufacturers offering products that may be incorporated into the Work include, but are not limited to the following:

    a. Fry Reglet Corp.
    b. Gordon, Inc.
    c. Pittcon Industries.

2. Aluminum: Alloy and temper with not less than the strength and durability properties of ASTM B 221, Alloy 6063-T5.
3. Finish: Corrosion-resistant primer compatible with joint compound and finish materials specified.

2.6 JOINT TREATMENT MATERIALS

A. General: Comply with ASTM C 475/C 475M.

B. Joint Tape: Provide Fire and non-fire rated type to suit application.

1. Interior Gypsum Wallboard: Paper.
2. Tile Backing Panels: As recommended by panel manufacturer.

C. Joint Compound for Interior Gypsum Wallboard: For each coat use formulation that is compatible with other compounds applied on previous or for successive coats.

1. Prefilling: At open joints, rounded or beveled panel edges, and damaged surface areas, use setting-type taping compound.
2. Embedding and First Coat: For embedding tape and first coat on joints, fasteners, and trim flanges, use setting-type taping or drying-type, all-purpose compound.

    a. Use setting-type compound for installing paper-faced metal trim accessories.

3. Fill Coat: For second coat, use setting-type, sandable topping compound or drying-type, all-purpose compound.
4. Finish Coat: For third coat, use setting-type, sandable topping compound or drying-type, all-purpose compound.
5. Skim Coat: For final coat of Level 5 finish, use setting-type, sandable topping compound or drying-type, all-purpose compound.

D. Joint Compound for Tile Backing Panels:

1. Cementitious Backer Units: As recommended by backer unit manufacturer.

2.7 AUXILIARY MATERIALS

A. General: Provide auxiliary materials that comply with referenced installation standards and manufacturer's written recommendations.

B. Laminating Adhesive: Adhesive or joint compound recommended for directly adhering gypsum panels to continuous substrate.

C. Steel Drill Screws: ASTM C 1002, unless otherwise indicated.

1. Use screws complying with ASTM C 954 for fastening panels to steel members from 0.033 to 0.112 inch thick.
2. For fastening cementitious backer units, use screws of type and size recommended by panel manufacturer.

D. Sound Attenuation Blankets: ASTM C 665, Type I (blankets without membrane facing) produced by combining thermosetting resins with mineral fibers manufactured from glass, slag wool, or rock wool.

1. Fire-Resistance-Rated Assemblies: Comply with mineral-fiber requirements of assembly.

E. Acoustical Sealant: Manufacturer's standard nonsag, paintable, nonstaining latex sealant complying with ASTM C 834. Product effectively reduces airborne sound transmission through perimeter joints and openings in building construction as demonstrated by testing representative assemblies according to ASTM E 90.

F. Thermal Insulation: As specified in Section 072100 "Thermal Insulation."

PART 3 - EXECUTION

3.1 EXAMINATION

A. Examine areas and substrates including welded hollow-metal frames and support framing, with Installer present, for compliance with requirements and other conditions affecting performance of the Work.

B. Examine panels before installation. Reject panels that are wet, moisture damaged, and mold damaged.

C. Proceed with installation only after unsatisfactory conditions have been corrected.

3.2 APPLYING AND FINISHING PANELS, GENERAL

A. Comply with ASTM C 840.

B. Install ceiling panels across framing to minimize the number of abutting end joints and to avoid abutting end joints in central area of each ceiling. Stagger abutting end joints of adjacent panels not less than one framing member.

C. Install panels with face side out. Butt panels together for a light contact at edges and ends with not more than 1/16 inch of open space between panels. Do not force into place.

D. Locate edge and end joints over supports, except in ceiling applications where intermediate supports or gypsum board back-blocking is provided behind end joints. Do not place tapered edges against cut edges or ends. Stagger vertical joints on opposite sides of partitions. Do not make joints other than control joints at corners of framed openings.

E. Form control and expansion joints with space between edges of adjoining gypsum panels.

F. Cover both faces of support framing with gypsum panels in concealed spaces (above ceilings, etc.), except in chases braced internally.

1. Unless concealed application is indicated or required for sound, fire, air, or smoke ratings, coverage may be accomplished with scraps of not less than 8 sq. ft. in area.
2. Fit gypsum panels around ducts, pipes, and conduits.
3. Where partitions intersect structural members projecting below underside of floor/roof slabs and decks, cut gypsum panels to fit profile formed by structural members; allow 1/4- to 3/8-inch-wide joints to install sealant.

G. Isolate perimeter of gypsum board applied to non-load-bearing partitions at structural abutments, except floors. Provide 1/4- to 1/2-inch-wide spaces at these locations, and trim edges with edge trim where edges of panels are exposed. Seal joints between edges and abutting structural surfaces with acoustical sealant.

H. Attachment to Steel Framing: Attach panels so leading edge or end of each panel is attached to open (unsupported) edges of stud flanges first.

I. STC-Rated Assemblies: Seal construction at perimeters, behind control joints, and at openings and penetrations with a continuous bead of acoustical sealant. Install acoustical sealant at both faces of partitions at perimeters and through penetrations. Comply with ASTM C 919 and with

manufacturer's written recommendations for locating edge trim and closing off sound-flanking paths around or through assemblies, including sealing partitions above acoustical ceilings.

J. Install sound attenuation blankets before installing gypsum panels, unless blankets are readily installed after panels have been installed on one side.

3.3 APPLYING INTERIOR GYPSUM BOARD

A. Install interior gypsum board in locations indicated on Drawings.

B. Single-Layer Application:

1. On ceilings, apply gypsum panels before wall/partition board application to greatest extent possible and at right angles to framing, unless otherwise indicated.
2. On partitions/walls, apply gypsum panels as indicated or required by fire-resistance-rated assembly, and minimize end joints.

    a. Stagger abutting end joints not less than one framing member in alternate courses of panels.
    b. At stairwells and other high walls, install panels horizontally, unless otherwise indicated or required by fire-resistance-rated assembly.

3. On Z-furring members, apply gypsum panels vertically (parallel to framing) with no end joints. Locate edge joints over furring members.
4. Fastening Methods: Apply gypsum panels to supports with steel drill screws.

C. Multilayer Application:

1. On ceilings, apply gypsum board indicated for base layers before applying base layers on walls/partitions; apply face layers in same sequence. Apply base layers at right angles to framing members and offset face-layer joints 1 framing member, 16 inches minimum, from parallel base-layer joints, unless otherwise indicated or required by fire-resistance-rated assembly.
2. On partitions/walls, apply gypsum board indicated for base layers and face layers vertically (parallel to framing) with joints of base layers located over stud or furring member and face-layer joints offset at least one stud or furring member with base-layer joints, unless otherwise indicated or required by fire-resistance-rated assembly. Stagger joints on opposite sides of partitions.
3. On Z-furring members, apply base layer vertically (parallel to framing) and face layer either vertically (parallel to framing) or horizontally (perpendicular to framing) with vertical joints offset at least one furring member. Locate edge joints of base layer over furring members.
4. Fastening Methods: Fasten base layers and face layers separately to supports with screws.

D. Laminating to Substrate: Where gypsum panels are indicated as directly adhered to a substrate (other than studs, joists, furring members, or base layer of gypsum board), comply with gypsum board manufacturer's written recommendations and temporarily brace or fasten gypsum panels until fastening adhesive has set.

E. Curved Surfaces:

1. Install panels horizontally (perpendicular to supports) and unbroken, to extent possible, across curved surface plus 12-inch-long straight sections at ends of curves and tangent to them.
2. For double-layer construction, fasten base layer to studs with screws 16 inches o.c. Center gypsum board face layer over joints in base layer, and fasten to studs with screws spaced 12 inches o.c.

3.4 APPLYING TILE BACKING PANELS

A. Cementitious Backer Units: ANSI A108.11, at locations indicated to receive tile.

B. Where tile backing panels abut other types of panels in same plane, shim surfaces to produce a uniform plane across panel surfaces.

3.5 INSTALLING TRIM ACCESSORIES

A. General: For trim with back flanges intended for fasteners, attach to framing with same fasteners used for panels. Otherwise, attach trim according to manufacturer's written instructions.

B. Control Joints: Install control joints according to ASTM C 840 and in specific locations approved by Architect for visual effect at ceiling and wall intersections.

1. Ceilings: Provide perimeter relief at ceiling perimeters maximum surface dimension not to exceed 50 feet.
2. Walls: Provide control joints maximum of 30 feet on center.
3. At “L”, “T” or “U” shaped intersections verify joint locations with the Architect prior to starting board installation.

3.6 FINISHING GYPSUM BOARD

A. General: Treat gypsum board joints, interior angles, edge trim, control joints, penetrations, fastener heads, surface defects, and elsewhere as required to prepare gypsum board surfaces for decoration. Promptly remove residual joint compound from adjacent surfaces.

B. Prefill open joints and damaged surface areas.

C. Apply joint tape over gypsum board joints, except for trim products specifically indicated as not intended to receive tape.

D. Gypsum Board Finish Levels: Finish panels to levels indicated below and according to ASTM C 840:

1. Level 2: Ceiling plenum and other concealed areas.
2. Level 4: Storage and Mechanical areas.
3. Level 5: All other areas. Level 5 finish may be achieved by finishing joints to Level 5 finish and applying one of the following surfacers to achieve 13 mil DFT (minimum):

a. “Tuff-Hide Primer-Surfacer”; USG.
b. ProForm Brand “Surfacer/Primer”; National

E. Moisture resistant board shall be finished to same requirements as above with addition of skim coat over entire board surface as required to prepare for finishes.

F. Cementitious Backer Units: Finish according to manufacturer's written instructions.

3.7 PROTECTION

A. Protect adjacent surfaces from drywall compound and promptly remove from floors and other non-drywall surfaces. Repair surfaces stained, marred, or otherwise damaged during drywall application.

B. Protect installed products from damage from weather, condensation, direct sunlight, construction, and other causes during remainder of the construction period.

C. Remove and replace panels that are wet, moisture damaged, and mold damaged.

1. Indications that panels are wet or moisture damaged include, but are not limited to, discoloration, sagging, or irregular shape.
2. Indications that panels are mold damaged include, but are not limited to, fuzzy or splotchy surface contamination and discoloration.

END OF SECTION

SECTION 093013

TILE

PART 1 - GENERAL

1.1 RELATED DOCUMENTS

A. Drawings and general provisions of the Contract, including General and Supplementary Conditions and Division 01 Specification Sections, apply to this Section.

1.2 SUMMARY

A. Section Includes:

1. Quarry tile.
2. Porcelain tile.
3. Glazed wall tile.
4. Stone thresholds.
5. Waterproof membrane.

1.3 DEFINITIONS

A. General: Definitions in the ANSI A108 series of tile installation standards and in ANSI A137.1 apply to Work of this Section unless otherwise specified.

B. ANSI A108 Series: ANSI A108.01, ANSI A108.02, ANSI A108.1A, ANSI A108.1B, ANSI A108.1C, ANSI A108.4, ANSI A108.5, ANSI A108.6, ANSI A108.8, ANSI A108.9, ANSI A108.10, ANSI A108.11, ANSI A108.12, ANSI A108.13, ANSI A108.14, ANSI A108.15, ANSI A108.16, and ANSI A108.17, which are contained in its "Specifications for Installation of Ceramic Tile."

1.4 PREINSTALLATION MEETINGS

A. Preinstallation Conference: Conduct conference at Project site.

1. Review requirements in ANSI A108.01 for substrates and for preparation by other trades.

1.5 ACTION SUBMITTALS

A. Product Data: For each type of product.

B. Shop Drawings: Show locations of each type of tile and tile pattern. Show widths, details, and locations of expansion, contraction, control, and isolation joints in tile substrates and finished tile surfaces.

C. Samples for Initial Selection: For each type of tile and grout indicated. Include Samples of accessories involving color selection.

D. Samples for Verification:

1. Full-size units of each type and composition of tile and for each color and finish required.
2. Assembled samples mounted on a rigid panel, with grouted joints, for each type and composition of tile and for each color and finish required. Make samples at least 12 inches square, but not fewer than 4 tiles. Use grout of type and in color or colors approved for completed Work.
3. Full-size units of each type of trim and accessory for each color and finish required.
4. Stone thresholds in 6-inch lengths.

1.6 INFORMATIONAL SUBMITTALS

A. Qualification Data: For qualified Installer.

B. Master Grade Certificates: For each shipment, type, and composition of tile, signed by tile manufacturer and Installer.

C. Product Certificates: For each type of product, signed by product manufacturer.

D. Material Test Reports: For each tile-setting and -grouting product and special purpose tile.

1.7 MAINTENANCE MATERIAL SUBMITTALS

A. Furnish extra materials that match and are from same production runs as products installed and that are packaged with protective covering for storage and identified with labels describing contents.

1. Tile and Trim Units: Furnish quantity of full-size units equal to 3 percent of amount installed for each type, composition, color, pattern, and size indicated.
2. Grout: Furnish quantity of grout equal to 3 percent of amount installed for each type, composition, and color indicated.

1.8 QUALITY ASSURANCE

A. Installer Qualifications:

1. Installer is a five-star member of the National Tile Contractors Association or a Trowel of Excellence member of the Tile Contractors' Association of America.

B. Mockups: Build mockups to verify selections made under sample submittals and to demonstrate aesthetic effects and set quality standards for materials and execution.

1. Build 10 by 10-foot mockup of each type of floor tile installation.
2. Build 10-foot mockup of each type of wall tile installation.
3. Approved mockups may become part of the completed Work if undisturbed at time of Substantial Completion.

1.9 DELIVERY, STORAGE, AND HANDLING

A. Deliver and store packaged materials in original containers with seals unbroken and labels intact until time of use. Comply with requirements in ANSI A137.1 for labeling tile packages.

B. Store tile and cementitious materials on elevated platforms, under cover, and in a dry location.

C. Store aggregates where grading and other required characteristics can be maintained and contamination can be avoided.

D. Store liquid materials in unopened containers and protected from freezing.

1.10 FIELD CONDITIONS

A. Environmental Limitations: Do not install tile until construction in spaces is complete and ambient temperature and humidity conditions are maintained at the levels indicated in referenced standards and manufacturer's written instructions.

PART 2 - PRODUCTS

2.1 PRODUCTS, GENERAL

A. ANSI Ceramic Tile Standard: Provide tile that complies with ANSI A137.1 for types, compositions, and other characteristics indicated.

1. Provide tile complying with Standard grade requirements unless otherwise indicated.

B. ANSI Standards for Tile Installation Materials: Provide materials complying with ANSI A108.02, ANSI standards referenced in other Part 2 articles, ANSI standards referenced by TCA installation methods specified in tile installation schedules, and other requirements specified.

C. Factory Blending: For tile exhibiting color variations within ranges, blend tile in factory and package so tile units taken from one package show same range in colors as those taken from other packages and match approved Samples.

D. Mounting: For factory-mounted tile, provide back- or edge-mounted tile assemblies as standard with manufacturer unless otherwise indicated.

1. Where tile is indicated for installation in wet areas, do not use back- or edge-mounted tile assemblies unless tile manufacturer specifies in writing that this type of mounting is suitable for installation indicated and has a record of successful in-service performance.

2.2 TILE PRODUCTS

A. Except as may be otherwise specified or approved in advance by the Architect, provide floor tiles with coefficiency of friction of 0.6 or higher for floor surfaces, 0.8 for ramps, when tested in accordance with ASTM C1028.

B. Provide material as indicated for size, color and types as required and as specified herein:

1. Ceramic Tile, glazed:

a. Manufacturer: Daltile.
b. Type: Matte.
c. Size: 6" x 6"; 5/16 inch thick.
d. Colors: As indicated in Section 090600 - Room Finish Schedule – Color Legend.

e. Patterns: As shown on the Drawings.
f. Recycled Content: Minimum 32.5 percent pre-consumer recycled content.

2. Porcelain Tile:

a. Manufacturer: Daltile.
b. Size: 13” x 13”, 6-1/2” x 6-1/2”, and 6” x 13” coved wall base; 3/8 inch thick.
c. Colors: As indicated in Section 090600 - Room Finish Schedule – Color Legend.
d. Patterns: As shown on the Drawings.
e. Recycled Content: Minimum 17 percent pre-consumer recycled content.

3. Quarry Tile, unglazed:

a. Manufacturer: Daltile,
b. Size: 6" x 6" floor tile and wall base; 3/8 inch thick.
c. Color: As indicated in Section 090600 - Room Finish Schedule - Color Legend.
d. Patterns: None.
e. Recycled Content: Minimum 6 percent pre-consumer recycled content.

C. Trim: Provide tile trim and shapes of same material adjacent tiles to complete installation so that raw edges or cut edges are not exposed. Colors of trim tile shall match surrounding tiles, unless otherwise shown or scheduled.

2.3 THRESHOLDS

A. General: Fabricate to sizes and profiles indicated or required to provide transition between adjacent floor finishes.

1. Bevel edges at 1:2 slope, with lower edge of bevel aligned with or up to 1/16 inch above adjacent floor surface. Finish bevel to match top surface of threshold. Limit height of threshold to 1/2 inch or less above adjacent floor surface. Continuous length and width to match door frame or wall construction.

B. Marble Thresholds: ASTM C 503, with a minimum abrasion resistance of 10 per ASTM C 1353 or ASTM C 241 and with honed finish.

1. Description: Uniform, fine- to medium-grained white stone with gray veining.

2.4 WATERPROOF MEMBRANE

A. General: Manufacturer's standard product, selected from the following, that complies with ANSI A118.10 and is recommended by the manufacturer for the application indicated. Include reinforcement and accessories recommended by manufacturer.

B. Fluid-Applied Membrane: Liquid-latex rubber or elastomeric polymer.

1. Products: Subject to compliance with requirements, available products that may be incorporated into the Work include, but are not limited to, the following:

a. Custom Building Products; Redgard Waterproofing and Crack Prevention Membrane.
b. Laticrete International, Inc.; Laticrete Hydro Ban.
c. MAPEI Corporation; Mapelastic HPG.

d. Merkrete by Parex USA, Inc.

2.5 SETTING MATERIALS

A. Portland Cement Mortar (Thickset) Installation Materials: ANSI A108.02.

1. Cleavage Membrane: Asphalt felt, ASTM D 226, Type I (No. 15); or polyethylene sheeting, ASTM D 4397, 4.0 mils thick.
2. Reinforcing Wire Fabric: Galvanized, welded wire fabric, 2 by 2 inches by 0.062-inch diameter; comply with ASTM A 185 and ASTM A 82 except for minimum wire size.
3. Latex Additive: Manufacturer's standard water emulsion, serving as replacement for part or all of gaging water, of type specifically recommended by latex-additive manufacturer for use with field-mixed portland cement and aggregate mortar bed.

B. Modified Dry-Set Mortar (Thinset): ANSI A118.4.

1. Manufacturers: Subject to compliance with requirements, available manufacturers offering products that may be incorporated into the Work include, but are not limited to, the following:

   a. Custom Building Products; ProLite.
   b. Laticrete International, Inc.; 254 Platinum Thinset.
   c. MAPEI Corporation; UltraFlex 3.
   d. Merkrete by Parex USA, Inc,;735 Premium Flex.

2. For wall applications, provide mortar that complies with requirements for nonsagging mortar in addition to the other requirements in ANSI A118.4.

C. Water-Cleanable, Tile-Setting Epoxy: ANSI A118.3.

1. Manufacturers: Subject to compliance with requirements, available manufacturers offering products that may be incorporated into the Work include, but are not limited to, the following:

   a. Custom Building Products.
   b. LATICRETE SUPERCAP, LLC.
   c. MAPEI Corporation.
   d. Merkrete by Parex USA, Inc.

2. Adhesives shall have a VOC content of 65 g/L or less.
3. Provide product capable of withstanding continuous and intermittent exposure to temperatures of up to 140 deg F and 212 deg F, respectively, and certified by manufacturer for intended use.

2.6 GROUT MATERIALS

A. Sand-Portland Cement Grout: ANSI A108.10, composed of white or gray cement and white or colored aggregate as required to produce color indicated.

B. Standard Cement Grout: ANSI A118.6.

1. Manufacturers: Subject to compliance with requirements, available manufacturers offering products that may be incorporated into the Work include, but are not limited to, the following:

    a. Custom Building Products.
    b. Laticrete International, Inc.
    c. MAPEI Corporation.
    d. Merkrete by Parex USA, Inc.

C. High-Performance Tile Grout: ANSI A118.7.

1. Manufacturers: Subject to compliance with requirements, available manufacturers offering products that may be incorporated into the Work include, but are not limited to, the following:

    a. Custom Building Products.
    b. Laticrete International, Inc.
    c. MAPEI Corporation.
    d. Merkrete by Parex USA, Inc.

D. Water-Cleanable Epoxy Grout: ANSI A118.3, with a VOC content of 65 g/L or less.

1. Manufacturers: Subject to compliance with requirements, available manufacturers offering products that may be incorporated into the Work include, but are not limited to, the following:

    a. Custom Building Products; CEG Lite Epoxy Grout.
    b. Laticrete International, Inc; SpectraLOCK Pro Grout.
    c. MAPEI Corporation; Kerapoxy 100% Solids Epoxy Mortar and Grout.
    d. Merkrete by Parex USA, Inc.; Merkrete ProEpoxy 100% Solids Epoxy Mortar and Grout.
2. Application Areas: provide epoxy grout in the following locations:

    a. Toilet room floors.
    b. Kitchen floors.
    c. Wall base in rooms where floors have epoxy.
    d. Where scheduled on the Room Finish Schedule.
    e. Where epoxy mortar is scheduled.

2.7 QUARRY TILE GROUT

A. Grout: Epoxy, 100 percent solids, ANSI A118.3.

1. Manufacturers: Subject to compliance with requirements, available manufacturers offering products that may be incorporated into the Work include, but are not limited to, the following:

    a. Thinset bond type; Kerapoxy manufactured by Mapei.

B. Polymer-Modified Tile Grout: ANSI A118.7.

1. Manufacturers: Subject to compliance with requirements, available manufacturers offering products that may be incorporated into the Work include, but are not limited to, the following:

a. Laticrete International, Inc.; Spectra Lock Pro Grout.

2.8 MISCELLANEOUS MATERIALS

A. Trowelable Underlayments and Patching Compounds: Latex-modified, portland cement-based formulation provided or approved by manufacturer of tile-setting materials for installations indicated.

B. Metal Edge Strips: Height to match tile and setting-bed thickness, metallic. Locate at all outside corners.

1. Basis of Design Schluter Systems; Quadec.
2. Exposed-edge material: Satin Anodized Aluminum (AE).

C. Tile Cleaner: A neutral cleaner capable of removing soil and residue without harming tile and grout surfaces, specifically approved for materials and installations indicated by tile and grout manufacturers.

D. Grout Sealer: Manufacturer's standard product for sealing grout joints and that does not change color or appearance of grout.

1. Products: Subject to compliance with requirements, available products that may be incorporated into the Work include, but are not limited to, the following:

a. Custom Building Products; Surfaceguard Sealer.
b. MAPEI Corporation; KER 003, Silicone Spray Sealer for Cementitious Tile Grout.
c. Summitville Tiles, Inc.; SL-15, Invisible Seal Penetrating Grout and Tile Sealer.
d. TEC; a subsidiary of H. B. Fuller Company; TA-256 Penetrating Silicone Grout Sealer.

2.9 MIXING MORTARS AND GROUT

A. Mix mortars and grouts to comply with referenced standards and mortar and grout manufacturers' written instructions.

B. Add materials, water, and additives in accurate proportions.

C. Obtain and use type of mixing equipment, mixer speeds, mixing containers, mixing time, and other procedures to produce mortars and grouts of uniform quality with optimum performance characteristics for installations indicated.

PART 3 - EXECUTION

3.1 EXAMINATION

A. Examine substrates, areas, and conditions where tile will be installed, with Installer present, for compliance with requirements for installation tolerances and other conditions affecting performance of installed tile.

1. Verify that substrates for setting tile are firm, dry, clean, free of coatings that are incompatible with tile-setting materials including curing compounds and other substances

that contain soap, wax, oil, or silicone; and comply with flatness tolerances required by ANSI A108.01 for installations indicated.

2. Verify that concrete substrates for tile floors installed with thin-set mortar comply with surface finish requirements in ANSI A108.01 for installations indicated.

    a. Verify that surfaces that received a steel trowel finish have been mechanically scarified.
    b. Verify that protrusions, bumps, and ridges have been removed by sanding or grinding.

3. Verify that installation of grounds, anchors, recessed frames, electrical and mechanical units of work, and similar items located in or behind tile has been completed.
4. Verify that joints and cracks in tile substrates are coordinated with tile joint locations; if not coordinated, adjust joint locations in consultation with Architect.

B. Proceed with installation only after unsatisfactory conditions have been corrected.

3.2 PREPARATION

A. Fill cracks, holes, and depressions in concrete substrates for tile floors installed with thin-set mortar with trowelable leveling and patching compound specifically recommended by tile-setting material manufacturer.

B. Where indicated, prepare substrates to receive waterproofing by applying a reinforced mortar bed that complies with ANSI A108.1A and is sloped 1/4 inch per foot toward drains.

C. Blending: For tile exhibiting color variations, verify that tile has been factory blended and packaged so tile units taken from one package show same range of colors as those taken from other packages and match approved Samples. If not factory blended, either return to manufacturer or blend tiles at Project site before installing.

3.3 CERAMIC TILE INSTALLATION

A. Comply with TCNA's "Handbook for Ceramic, Glass, and Stone Tile Installation" for TCNA installation methods specified in tile installation schedules. Comply with parts of the ANSI A108 series "Specifications for Installation of Ceramic Tile" that are referenced in TCNA installation methods, specified in tile installation schedules, and apply to types of setting and grouting materials used.

    1. For the following installations, follow procedures in the ANSI A108 Series of tile installation standards for providing 95 percent mortar coverage:

        a. Tile floors in wet areas.
        b. Tile floors in laundries.
        c. Tile floors composed of tiles 8 by 8 inches or larger.
        d. Tile floors composed of rib-backed tiles.

B. Extend tile work into recesses and under or behind equipment and fixtures to form complete covering without interruptions unless otherwise indicated. Terminate work neatly at obstructions, edges, and corners without disrupting pattern or joint alignments.

C. Accurately form intersections and returns. Perform cutting and drilling of tile without marring visible surfaces. Carefully grind cut edges of tile abutting trim, finish, or built-in items for straight

aligned joints. Fit tile closely to electrical outlets, piping, fixtures, and other penetrations so plates, collars, or covers overlap tile.

D. Provide manufacturer's standard trim shapes where necessary to eliminate exposed tile edges.

E. Jointing Pattern: Lay tile in brick pattern unless otherwise indicated. Lay out tile work and center tile fields in both directions in each space or on each wall area. Lay out tile work to minimize the use of pieces that are less than half of a tile. Provide uniform joint widths unless otherwise indicated.

1. For tile mounted in sheets, make joints between tile sheets same width as joints within tile sheets so joints between sheets are not apparent in finished work.
2. Where adjoining tiles on floor, base, walls, or trim are specified or indicated to be same size, align joints.
3. Where tiles are specified or indicated to be whole integer multiples of adjoining tiles on floor, base, walls, or trim, align joints unless otherwise indicated.

F. Joint Widths: As recommended by tile manufacturer.

G. Expansion Joints: Provide expansion joints and other sealant-filled joints, including control, contraction, and isolation joints, where indicated. Form joints during installation of setting materials, mortar beds, and tile. Do not saw-cut joints after installing tiles.

1. Where joints occur in concrete substrates, locate joints in tile surfaces directly above them.

H. Stone Thresholds: Install stone thresholds in same type of setting bed as adjacent floor unless otherwise indicated.

1. At locations where mortar bed (thickset) would otherwise be exposed above adjacent floor finishes, set thresholds in latex-portland cement mortar (thin set).
2. Do not extend waterproofing or crack isolation membrane under thresholds set in dry-set portland cement or latex-portland cement mortar. Fill joints between such thresholds and adjoining tile set on waterproofing or crack isolation membrane with elastomeric sealant.

I. Grout Sealer: Apply grout sealer to grout joints according to grout-sealer manufacturer's written instructions. As soon as grout sealer has penetrated grout joints, remove excess sealer and sealer from tile faces by wiping with soft cloth.

3.4 TILE BACKING PANEL INSTALLATION

A. Install cementitious backer units and treat joints according to ANSI A108.11 and manufacturer's written instructions for type of application indicated. Use latex-portland cement mortar for bonding material unless otherwise directed in manufacturer's written instructions.

3.5 WATERPROOFING INSTALLATION

A. Install waterproofing to comply with ANSI A108.13 and manufacturer's written instructions to produce waterproof membrane of uniform thickness and bonded securely to substrate.

B. Do not install tile or setting materials over waterproofing until waterproofing has cured and been tested to determine that it is watertight.

3.6 ADJUSTING AND CLEANING

A. Remove and replace tile that is damaged or that does not match adjoining tile. Provide new matching units, installed as specified and in a manner to eliminate evidence of replacement.

B. Cleaning: On completion of placement and grouting, clean all ceramic tile surfaces so they are free of foreign matter.

1. Remove grout residue from tile as soon as possible.
2. Clean grout smears and haze from tile according to tile and grout manufacturer's written instructions but no sooner than 10 days after installation. Use only cleaners recommended by tile and grout manufacturers and only after determining that cleaners are safe to use by testing on samples of tile and other surfaces to be cleaned. Protect metal surfaces and plumbing fixtures from effects of cleaning. Flush surfaces with clean water before and after cleaning.

3.7 PROTECTION

A. Protect installed tile work with kraft paper or other heavy covering during construction period to prevent staining, damage, and wear. If recommended by tile manufacturer, apply coat of neutral protective cleaner to completed tile walls and floors.

B. Prohibit foot and wheel traffic from tiled floors for at least seven days after grouting is completed.

C. Before final inspection, remove protective coverings and rinse neutral protective cleaner from tile surfaces.

3.8 INTERIOR TILE INSTALLATION SCHEDULE

A. Interior Floor Installations, Concrete Subfloor:

1. Tile Installation: TCNA F113; thinset mortar.

   a. Thinset Mortar: Modified dry-set mortar.
   b. Grout: High-performance sanded grout.

2. Ceramic Tile Installation: TCNA F114 and ANSI A108.1C; cement mortar bed (thickset) with cleavage membrane; epoxy grout.

   a. Bond Coat for Cured-Bed Method: Modified dry-set mortar.
   b. Grout: Water-cleanable epoxy grout.

3. Tile Installation: TCNA F116; water-cleanable, tile-setting epoxy.

   a. Grout: Water-cleanable epoxy grout.

4. Tile Installation: TCNA F131; water-cleanable, tile-setting epoxy; epoxy grout.

   a. Grout: Water-cleanable epoxy grout.

5. Tile Installation: TCNA F132; water-cleanable, tile-setting epoxy on cured cement mortar bed bonded to concrete subfloor; epoxy grout.

a. Grout: Water-cleanable epoxy grout.

B. Interior Wall Installations, Wood or Metal Studs or Furring:

1. Tile Installation: TCNA W244C or TCNA W244F; thinset mortar on cementitious backer units or fiber-cement backer board.

a. Thinset Mortar: Modified dry-set mortar.
b. Grout: High-performance sanded grout.

END OF SECTION

SECTION 095113

ACOUSTICAL PANEL CEILINGS

PART 1 - GENERAL

1.1 RELATED DOCUMENTS

A. Drawings and general provisions of the Contract, including General and Supplementary Conditions and Division 01 Specification Sections, apply to this Section.

1.2 SUMMARY

A. Section includes acoustical panels and exposed suspension systems for ceilings.

B. Products furnished, but not installed under this Section, include anchors, clips, and other ceiling attachment devices to be cast in concrete.

1.3 PREINSTALLATION MEETINGS

A. Preinstallation Conference: Conduct conference at Project site.

1.4 ACTION SUBMITTALS

A. Submittals and samples must be issued within 90 days of the start of construction.

B. Product Data: For each type of product.

C. Samples: For each exposed product and for each color and texture specified, 6 inches in size.

D. Samples for Verification: For each component indicated and for each exposed finish required, prepared on Samples of size indicated below.

1. Acoustical Panel: Set of 6-inch-square Samples of each type, color, pattern, and texture.
2. Exposed Suspension-System Members, Moldings, and Trim: Set of 6-inch-long Samples of each type, finish, and color.

1.5 INFORMATIONAL SUBMITTALS

A. Coordination Drawings: Reflected ceiling plans, drawn to scale, on which the following items are shown and coordinated with each other, using input from installers of the items involved:

1. Suspended ceiling components.
2. Structural members to which suspension systems will be attached.
3. Size and location of initial access modules for acoustical panels.
4. Items penetrating finished ceiling including the following:

   a. Lighting fixtures.

b. Air outlets and inlets.
c. Speakers.
d. Sprinklers.
e. Access panels.

5. Perimeter moldings.

B. Qualification Data: For testing agency.

C. Product Test Reports: For each acoustical panel ceiling, for tests performed by a qualified testing agency.

D. Evaluation Reports: For each acoustical panel ceiling suspension system and anchor and fastener type, from ICC-ES.

1.6 CLOSEOUT SUBMITTALS

A. Maintenance Data: For finishes to include in maintenance manuals.

1.7 MAINTENANCE MATERIAL SUBMITTALS

A. Furnish extra materials that match products installed and that are packaged with protective covering for storage and identified with labels describing contents.

1. Acoustical Ceiling Panels: Provide four standard cartons of each type acoustic units to Owner, upon substantial completion.
2. Suspension-System Components: Quantity of each exposed component equal to 2 percent of quantity installed.
3. Hold-Down Clips: Equal to 2 percent of quantity installed.
4. Impact Clips: Equal to 2 percent of quantity installed.

1.8 QUALITY ASSURANCE

A. Mockups: Build mockups to verify selections made under sample submittals and to demonstrate aesthetic effects and set quality standards for materials and execution.

1. Build mockup of typical ceiling area as shown on Drawings.
2. Approval of mockups does not constitute approval of deviations from the Contract Documents contained in mockups unless Architect specifically approves such deviations in writing.
3. Subject to compliance with requirements, approved mockups may become part of the completed Work if undisturbed at time of Substantial Completion.

1.9 DELIVERY, STORAGE, AND HANDLING

A. Deliver acoustical panels, suspension-system components, and accessories to Project site in original, unopened packages and store them in a fully enclosed, conditioned space where they will be protected against damage from moisture, humidity, temperature extremes, direct sunlight, surface contamination, and other causes.

B. Before installing acoustical panels, permit them to reach room temperature and a stabilized moisture content.

1.10 FIELD CONDITIONS

A. Environmental Limitations: Do not install acoustical panel ceilings until spaces are enclosed and weatherproof, wet work in spaces is complete and dry, work above ceilings is complete, and ambient temperature and humidity conditions are maintained at the levels indicated for Project when occupied for its intended use.

1. Pressurized Plenums: Operate ventilation system for not less than 48 hours before beginning acoustical panel ceiling installation.

PART 2 - PRODUCTS

2.1 PERFORMANCE REQUIREMENTS

A. Surface-Burning Characteristics: Comply with ASTM E 84; testing by a qualified testing agency. Identify products with appropriate markings of applicable testing agency.

1. Flame-Spread Index: Comply with ASTM E 1264 for Class A materials.
2. Smoke-Developed Index: 450 or less.

B. Fire-Resistance Ratings: Comply with ASTM E 119; testing by a qualified testing agency. Identify products with appropriate markings of applicable testing agency.

1. Indicate design designations from UL's "Fire Resistance Directory" or from the listings of another qualified testing agency.

2.2 ACOUSTICAL PANELS, GENERAL

A. Source Limitations:

1. Acoustical Ceiling Panel: Obtain each type from single source from single manufacturer.
2. Suspension System: Obtain each type from single source from single manufacturer.

B. Source Limitations: Obtain each type of acoustical ceiling panel and supporting suspension system from single source from single manufacturer.

C. Glass-Fiber-Based Panels: Made with binder containing no urea formaldehyde.

D. Acoustical Panel Standard: Provide manufacturer's standard panels of configuration indicated that comply with ASTM E 1264 classifications as designated by types, patterns, acoustical ratings, and light reflectances unless otherwise indicated.

1. Mounting Method for Measuring NRC: Type E-400; plenum mounting in which face of test specimen is 15-3/4 inches away from test surface according to ASTM E 795.

E. Acoustical Panel Colors and Patterns: Match appearance characteristics indicated for each product type.

1. Where appearance characteristics of acoustical panels are indicated by referencing pattern designations in ASTM E 1264 and not manufacturers' proprietary product designations, provide products selected by Architect from each manufacturer's full range that comply with requirements indicated for type, pattern, color, light reflectance, acoustical performance, edge detail, and size.

2.3 ACOUSTICAL PANELS: ACT-1, ACT-2, ACT-3, ACT-4, ACT-6, ACT-7, ACT-8

A. Basis-of-Design Product: Subject to compliance with requirements, provide products by Armstrong World Industries, Inc; or a comparable product by one of the following:

1. CertainTeed Corporation.
2. Rockfon (Roxul Inc.).
3. USG Corporation.

B. Acoustical Panel Standard: Provide manufacturer's standard panels according to ASTM E 1264 and designated by type, form, pattern, acoustical rating, and light reflectance unless otherwise indicated.

C. Classification: Provide panels as follows:

1. Type and Form: Type III, mineral base with painted finish; Form 1, nodular or Form 2, water felted.
2. Pattern: CE (perforated, small holes and lightly textured)
3. Sizes: Refer to Section 090600.

D. Refer to Section 090600 for item numbers, descriptions, and colors.

2.4 ACOUSTICAL PANELS: ACT-5

A. Basis-of-Design Product: Subject to compliance with requirements, provide products by Nudo; or a comparable product by one of the following:

1. Armstrong World Industries, Inc.
2. CertainTeed Corporation.
3. Rockfon (Roxul Inc.).
4. USG Corporation.

B. FRP-Faced Gypsum Panel Materials:

1. Type ACT-5 FRP-Faced Gypsum Ceiling Panels

a. Size: 24” x 48” x 1/2”, unless otherwise indicated on the Drawings.
b. Composition: 0.030 Class A flame spread fiberglass-reinforced plastic (FRP) laminated to fire-rated, moisture-resistant gypsum panel.
c. Face Finish: White textured FRP.
d. Edge: Square-cut for lay-in.

C. FRP-Faced Gypsum Ceiling Panels shall be warranted by manufacturer for 10 years against delamination.

D. Refer to Section 090600 for descriptions and colors.

2.5 METAL SUSPENSION SYSTEMS, GENERAL

A. Metal Suspension-System Standard: Provide manufacturer's standard direct-hung metal suspension systems of types, structural classifications, and finishes indicated that comply with applicable requirements in ASTM C 635/C 635M.

B. Attachment Devices: Size for five times the design load indicated in ASTM C 635/C 635M, Table 1, "Direct Hung," unless otherwise indicated. Comply with seismic design requirements.

C. Wire Hangers, Braces, and Ties: Provide wires complying with the following requirements:

1. Zinc-Coated, Carbon-Steel Wire: ASTM A 641/A 641M, Class 1 zinc coating, soft temper.
2. Size: Select wire diameter so its stress at three times hanger design load (ASTM C 635/C 635M, Table 1, "Direct Hung") will be less than yield stress of wire, but provide not less than 0.106-inch-diameter wire.

D. Angle Hangers: Angles with legs not less than 7/8-inch-wide; formed with 0.04-inch-thick, galvanized-steel sheet complying with ASTM A 653/A 653M, G90 coating designation; with bolted connections and 5/16-inch-diameter bolts.

E. Stabilizer Bars: Manufacturer's standard perimeter stabilizers.

2.6 METAL SUSPENSION SYSTEM

A. Basis-of-Design Product: Subject to compliance with requirements, provide products by Armstrong World Industries, Inc; or a comparable product by one of the following:

1. CertainTeed Corporation.
2. Rockfon (Roxul Inc.).
3. USG Corporation.

B. Metal Suspension-System Standard: Provide manufacturer's standard, direct-hung, metal suspension system and accessories according to ASTM C 635/C 635M and designated by type, structural classification, and finish indicated.

C. Wide-Face, Capped, Double-Web, Steel Suspension System: Main and cross runners roll formed from cold-rolled steel sheet; prepainted, electrolytically zinc coated, or hot-dip galvanized, G30 coating designation; with prefinished 15/16-inch-wide metal caps on flanges.

1. Structural Classification: Heavy-duty system.
2. End Condition of Cross Runners: Override (stepped) or butt-edge type.
3. Face Design: Flat, flush.
4. Cap Material: Aluminum.
5. Cap Finish: Painted white.

D. Provide 15/16 inch in Calla Collorations color to match ceiling Calla Colorations.

2.7 METAL EDGE MOLDINGS AND TRIM

A. Manufacturers: Subject to compliance with requirements, available manufacturers offering products that may be incorporated into the Work include, but are not limited to the following:

1. Armstrong World Industries, Inc.
2. CertainTeed Corporation.
3. Chicago Metallic Corporation.
4. Fry Reglet Corporation.
5. Gordon, Inc.
6. USG Corporation.

B. Roll-Formed, Sheet-Metal Edge Moldings and Trim: Type and profile indicated or, if not indicated, manufacturer's standard moldings for edges and penetrations that comply with seismic design requirements; formed from sheet metal of same material, finish, and color as that used for exposed flanges of suspension-system runners.

1. Provide manufacturer's standard edge moldings that fit acoustical panel edge details and suspension systems indicated and that match width and configuration of exposed runners unless otherwise indicated.
2. For lay-in panels with reveal edge details, provide stepped edge molding that forms reveal of same depth and width as that formed between edge of panel and flange at exposed suspension member.

C. Extruded-Aluminum Edge Moldings and Trim: Where indicated, provide manufacturer's extruded-aluminum edge moldings and trim of profile indicated or referenced by manufacturer's designations, including splice plates, corner pieces, and attachment and other clips, complying with seismic design requirements and the following:

1. Baked-Enamel or Powder-Coat Finish: Minimum dry film thickness of 1.5 mils. Comply with ASTM C 635/C 635M and coating manufacturer's written instructions for cleaning, conversion coating, and applying and baking finish.

PART 3 - EXECUTION

3.1 EXAMINATION

A. Examine substrates, areas, and conditions, including structural framing to which acoustical panel ceilings attach or abut, with Installer present, for compliance with requirements specified in this and other Sections that affect ceiling installation and anchorage and with requirements for installation tolerances and other conditions affecting performance of acoustical panel ceilings.

B. Examine acoustical panels before installation. Reject acoustical panels that are wet, moisture damaged, or mold damaged.

C. Proceed with installation only after unsatisfactory conditions have been corrected.

3.2 PREPARATION

A. Measure each ceiling area and establish layout of acoustical panels to balance border widths at opposite edges of each ceiling. Avoid using less-than-half-width panels at borders, and comply with layout shown on reflected ceiling plans.

B. Layout openings for penetrations centered on the penetrating items.

3.3 INSTALLATION

A. Install acoustical panel ceilings according to ASTM C 636/C 636M and manufacturer's written instructions.

1. Fire-Rated Assembly: Install fire-rated ceiling systems according to tested fire-rated design.

B. Suspend ceiling hangers from building's structural members and as follows:

1. Install hangers plumb and free from contact with insulation or other objects within ceiling plenum that are not part of supporting structure or of ceiling suspension system.
2. Splay hangers only where required and, if permitted with fire-resistance-rated ceilings, to miss obstructions; offset resulting horizontal forces by bracing, countersplaying, or other equally effective means.
3. Where width of ducts and other construction within ceiling plenum produces hanger spacings that interfere with location of hangers at spacings required to support standard suspension-system members, install supplemental suspension members and hangers in form of trapezes or equivalent devices.
4. Secure wire hangers to ceiling-suspension members and to supports above with a minimum of three tight turns. Connect hangers directly either to structures or to inserts, eye screws, or other devices that are secure and appropriate for substrate and that will not deteriorate or otherwise fail due to age, corrosion, or elevated temperatures.
5. Secure flat, angle, channel, and rod hangers to structure, including intermediate framing members, by attaching to inserts, eye screws, or other devices that are secure and appropriate for both the structure to which hangers are attached and the type of hanger involved. Install hangers in a manner that will not cause them to deteriorate or fail due to age, corrosion, or elevated temperatures.
6. Do not support ceilings directly from permanent metal forms or floor deck. Fasten hangers to cast-in-place hanger inserts, postinstalled mechanical or adhesive anchors, or power-actuated fasteners that extend through forms into concrete.
7. When steel framing does not permit installation of hanger wires at spacing required, install carrying channels or other supplemental support for attachment of hanger wires.
8. Do not attach hangers to steel deck tabs.
9. Do not attach hangers to steel roof deck. Attach hangers to structural members.
10. Space hangers not more than 48 inches o.c. along each member supported directly from hangers unless otherwise indicated; provide hangers not more than 8 inches from ends of each member.
11. Size supplemental suspension members and hangers to support ceiling loads within performance limits established by referenced standards and publications.

C. Secure bracing wires to ceiling suspension members and to supports with a minimum of four tight turns. Suspend bracing from building's structural members as required for hangers, without attaching to permanent metal forms, steel deck, or steel deck tabs. Fasten bracing wires into concrete with cast-in-place or postinstalled anchors.

D. Install edge moldings and trim of type indicated at perimeter of acoustical ceiling area and where necessary to conceal edges of acoustical panels.

1. Screw attach moldings to substrate at intervals not more than 16 inches o.c. and not more than 3 inches from ends, leveling with ceiling suspension system to a tolerance of 1/8 inch in 12 feet. Miter corners accurately and connect securely.
2. Do not use exposed fasteners, including pop rivets, on moldings and trim unless approved by Architect.

E. Install suspension-system runners so they are square and securely interlocked with one another. Remove and replace dented, bent, or kinked members.

F. Install acoustical panels with undamaged edges and fit accurately into suspension-system runners and edge moldings. Scribe and cut panels at borders and penetrations to provide a neat, precise fit.

1. Arrange directionally patterned acoustical panels as follows:

a. As indicated on reflected ceiling plans.

2. For square-edged panels, install panels with edges fully hidden from view by flanges of suspension-system runners and moldings.
3. For reveal-edged panels on suspension-system runners, install panels with bottom of reveal in firm contact with top surface of runner flanges.
4. Paint cut edges of panel remaining exposed after installation; match color of exposed panel surfaces using coating recommended in writing for this purpose by acoustical panel manufacturer.
5. Install hold-down and impact clips in areas indicated; space according to panel manufacturer's written instructions unless otherwise indicated.
   a. Hold-Down Clips: Space 24 incheso.c. on all cross runners.

6. Protect lighting fixtures and air ducts to comply with requirements indicated for fire-resistance-rated assembly.

3.4 CLEANING

A. Clean exposed surfaces of acoustical panel ceilings, including trim, edge moldings, and suspension-system members. Comply with manufacturer's written instructions for cleaning and touchup of minor finish damage.

B. Remove and replace ceiling components that cannot be successfully cleaned and repaired to permanently eliminate evidence of damage.

END OF SECTION

SECTION 096400

WOOD FLOORING

PART 1 - GENERAL

1.1 RELATED DOCUMENTS

A. Drawings and general provisions of the Contract, including General and Supplementary Conditions and Division 01 Specification Sections, apply to this Section.

1.2 SUMMARY

A. Section Includes:

1. Factory-finished wood flooring.

1.3 ACTION SUBMITTALS

A. Product Data: For each type of product.

B. Shop Drawings: For each type of floor assembly and accessory. Include plans, sections, and attachment details. Include expansion provisions and trim details.

C. Samples for Initial Selection: Manufacturer's color charts showing the full range of colors and finishes available for wood flooring.

1. Include Samples of accessories involving color and finish selection.

D. Samples for Verification: For each type of wood flooring and accessory, with stain color and finish required, approximately 12 inches long and of same thickness and material indicated for the Work and showing the full range of normal color and texture variations expected.

1.4 MAINTENANCE MATERIAL SUBMITTALS

A. Furnish extra materials that match products installed and that are packaged with protective covering for storage and identified with labels describing contents.

1. Wood Flooring: Equal to 1 percent of amount installed for each type, color, and finish of wood flooring indicated.

1.5 QUALITY ASSURANCE

A. Mockups: Build mockups to verify selections made under Sample submittals, to demonstrate aesthetic effects, and to set quality standards for materials and execution.

1. Approval of mockups does not constitute approval of deviations from the Contract Documents contained in mockups unless Architect specifically approves such deviations in writing.

1.6 DELIVERY, STORAGE, AND HANDLING

A. Deliver wood flooring materials in unopened cartons or bundles.

B. Protect wood flooring from exposure to moisture. Do not deliver wood flooring until after concrete, masonry, plaster, ceramic tile, and similar wet work is complete and dry.

C. Store wood flooring materials in a dry, warm, ventilated, weathertight location.

1.7 FIELD CONDITIONS

A. Conditioning period begins not less than seven days before wood flooring installation, is continuous through installation, and continues not less than seven days after wood flooring installation.

1. Environmental Conditioning: Maintain an ambient temperature between 65 and 75 deg F and relative humidity planned for building occupants in spaces to receive wood flooring during the conditioning period.
2. Wood Flooring Conditioning: Move wood flooring into spaces where it will be installed, no later than the beginning of the conditioning period.

a. Do not install flooring until it adjusts to relative humidity of, and is at same temperature as, space where it is to be installed.
b. Open sealed packages to allow wood flooring to acclimatize immediately on moving flooring into spaces in which it will be installed.

B. After conditioning period, maintain relative humidity and ambient temperature planned for building occupants.

C. Install factory-finished wood flooring after other finishing operations, including painting, have been completed.

PART 2 - PRODUCTS

2.1 PERFORMANCE REQUIREMENTS

A. Maple Flooring: Comply with applicable MFMA grading rules for species, grade, and cut.

2.2 FACTORY-FINISHED WOOD FLOORING

A. Solid-Wood Flooring: Kiln dried to 6 to 9 percent maximum moisture content; tongue and groove and end matched; with backs channeled.

1. Manufacturers: Subject to compliance with requirements, available manufacturers offering products that may be incorporated into the Work include, but are not limited to the following:

a. Aacer Flooring, LLC.
b. Armstrong World Industries, Inc.
c. Baird Brithers.
d. Shaw Flooring.
e. Somerset Flooring.
f. Tarkett.

2. Species: Maple.
3. Grade: Second and better, reverse profiled.
4. Cut: Edge grain.
5. Thickness: 25/32 inch.
6. Face Width: 2-1/4 inches.
7. Lengths: Random-length strips complying with applicable grading rules.
8. Edge Style: Square.
9. Finish: UV urethane. 2 coats sealer and minimum 3 coats oil-based polyurethane.

a. Color: As selected by Architect from manufacturer's full range.

2.3 ACCESSORY MATERIALS

A. Wood Underlayment: Pressure-treated 3/4-inch plywood and 2 by 4-inch sleepers.

B. Asphalt-Saturated Felt: ASTM D 4869/D 4869M, Type II.

C. Wood Flooring Adhesive: Mastic recommended by flooring and adhesive manufacturers for application indicated.

D. Trowelable Leveling and Patching Compound: Latex-modified, hydraulic-cement-based formulation approved by wood flooring manufacturer.

E. Fasteners: As recommended by manufacturer.

F. Thresholds and Saddles: To match wood flooring. Tapered on each side.

G. Reducer Strips: To match wood flooring. 2 inches wide, tapered, and in thickness required to match height of flooring.

PART 3 - EXECUTION

3.1 EXAMINATION

A. Examine substrates, areas and conditions, with Installer present, for compliance with requirements for maximum moisture content, installation tolerances, and other conditions affecting performance of wood flooring.

B. Proceed with installation only after unsatisfactory conditions have been corrected.

C. Concrete Slabs: Verify that concrete substrates are dry and moisture-vapor emissions are within acceptable levels according to manufacturer's written instructions.

1. Moisture Testing: Perform tests so that each test area does not exceed 1000 sq. ft., and perform no fewer than three tests in each installation area and with test areas evenly spaced in installation areas.

    a. Anhydrous Calcium Chloride Test: ASTM F 1869. Proceed with installation only after substrates have maximum moisture-vapor-emission rate of 4.5 lb of water/1000 sq. ft. in 24 hours.
    b. Relative Humidity Test: Using in situ probes, ASTM F 2170. Proceed with installation only after substrates have a maximum 80 percent relative humidity level measurement.
    c. Perform additional moisture tests recommended by manufacturer. Proceed with installation only after substrates pass testing.

3.2 PREPARATION

A. Concrete Slabs:

1. Grind high spots and fill low spots to produce a maximum 1/8-inch deviation in any direction when checked with a 10-foot straight edge.
2. Use trowelable leveling and patching compounds, according to manufacturer's written instructions, to fill cracks, holes, and depressions in substrates.

B. Broom or vacuum clean substrates to be covered immediately before product installation. After cleaning, examine substrates for moisture, alkaline salts, carbonation, or dust. Proceed with installation only after unsatisfactory conditions have been corrected.

3.3 INSTALLATION

A. Comply with flooring manufacturer's written installation instructions, but not less than applicable recommendations in NWFA's "Installation Guidelines: Wood Flooring."

B. Provide expansion space at walls and other obstructions and terminations of flooring of not less than 3/4 inch.

C. Vapor Retarder: Comply with the following for vapor retarder installation:

1. Wood Flooring Nailed to Wood Subfloor: Install flooring over a layer of asphalt-saturated felt.

D. Solid-Wood Flooring: Blind nail or staple flooring to substrate.

1. Plank Flooring: For flooring of face width more than 3 inches:

    a. Hardwood: Install countersunk screws at each end of each piece in addition to blind nailing. Cover screw heads with wood plugs glued flush with flooring.
    b. Softwood: Install no fewer than two countersunk nails at each end of each piece, spaced not more than 16 inches along length of each piece, in addition to blind nailing. Fill holes with matching wood filler.

3.4 PROTECTION

A. Protect installed wood flooring during remainder of construction period with covering of heavy kraft paper or other suitable material. Do not use plastic sheet or film that might cause condensation.

1. Do not move heavy and sharp objects directly over kraft-paper-covered wood flooring. Protect flooring with plywood or hardboard panels to prevent damage from storing or moving objects over flooring.

END OF SECTION

SECTION 096513

RESILIENT BASE AND ACCESSORIES

PART 1 - GENERAL

1.1 RELATED DOCUMENTS

A. Drawings and general provisions of the Contract, including General and Supplementary Conditions and Division 01 Specification Sections, apply to this Section.

1.2 SUMMARY

A. Section Includes:

1. Rubber base.
2. Rubber stair accessories.
3. Rubber molding accessories.

1.3 ACTION SUBMITTALS

A. Product Data: For each type of product.

B. Samples for Initial Selection: For each type of product indicated.

C. Samples for Verification: For each type of product indicated and for each color, texture, and pattern required in manufacturer's standard-size Samples, but not less than 12 inches long.

D. Product Schedule: For resilient base and accessory products. Use same designations indicated on Drawings.

1.4 MAINTENANCE MATERIAL SUBMITTALS

A. Furnish extra materials that match products installed and that are packaged with protective covering for storage and identified with labels describing contents.

1. Furnish not less than 10 linear feet for every 500 linear feet or fraction thereof, of each type, color, pattern, and size of resilient product installed.

1.5 QUALITY ASSURANCE

A. Mockups: Build mockups to verify selections made under Sample submittals and to demonstrate aesthetic effects and set quality standards for materials and execution.

1. Coordinate mockups in this Section with mockups specified in other Sections.
2. Approval of mockups does not constitute approval of deviations from the Contract Documents contained in mockups unless Architect specifically approves such deviations in writing.

1.6 DELIVERY, STORAGE, AND HANDLING

A. Store resilient products and installation materials in dry spaces protected from the weather, with ambient temperatures maintained within range recommended by manufacturer, but not less than 50 deg F or more than 90 deg F.

1.7 FIELD CONDITIONS

A. Maintain ambient temperatures within range recommended by manufacturer, but not less than 70 deg F or more than 95 deg F, in spaces to receive resilient products during the following time periods:

1. 48 hours before installation.
2. During installation.
3. 48 hours after installation.

B. After installation and until Substantial Completion, maintain ambient temperatures within range recommended by manufacturer, but not less than 55 deg F or more than 95 deg F.

C. Install resilient products after other finishing operations, including painting, have been completed.

PART 2 - PRODUCTS

2.1 THERMOPLASTIC-RUBBER BASE

A. Basis-of-Design Product: Subject to compliance with requirements, provide Johnsonite; a Tarkett company; Series Perception or a comparable product by one of the following:

1. Armstrong World Industries, Inc.
2. Roppe Corporation, USA.

B. Product Standard: ASTM F 1861, Type TP (rubber, thermoplastic).

1. Group: I (solid, homogeneous).

C. Thickness: 0.125 inch.

D. Height: 4-inches.

E. Lengths: Coils in manufacturer's maximum lengths.

1. Cut lengths not permitted.

F. Outside Corners: Job formed.

G. Inside Corners: Job formed.

H. Colors: Refer to Section 090600.

2.2 RUBBER STAIR ACCESSORIES

A. Fire-Test-Response Characteristics: As determined by testing identical products according to ASTM E 648 or NFPA 253 by a qualified testing agency.

1. Critical Radiant Flux Classification: Class I, not less than 0.45 W/sq. cm.

B. Basis-of-Design Product: Subject to compliance with requirements, provide the following:

1. Johnsonite; a Tarkett company; MicroTone.

C. Stair Treads: ASTM F 2169.

1. Type: Textured, Hammered.
2. Class: 2 (pattern; embossed, grooved, or ribbed).
3. Nosing Style: Square, adjustable to cover angles between 60 and 90 degrees.
4. Nosing Height: 2 inches.
5. Thickness: 1/4 inch and tapered to back edge.
6. Size: Lengths and depths to fit each stair tread in one piece or, for treads exceeding maximum lengths manufactured, in equal-length units.
7. Tread/Riser Combo at concrete stairs at stage & corridors.

D. Locations: Provide rubber stair accessories in areas indicated.

E. Colors and Patterns: Refer to Section 090600.

2.3 RUBBER MOLDING ACCESSORY

A. Manufacturers: Subject to compliance with requirements, available manufacturers offering products that may be incorporated into the Work include, but are not limited to the following:

1. Roppe Corporation, USA.
2. VPI Corporation.

B. Description: Rubber transition strips.

C. Profile and Dimensions: As indicated.

D. Locations: Provide rubber molding accessories in areas indicated.

2.4 INSTALLATION MATERIALS

A. Trowelable Leveling and Patching Compounds: Latex-modified, portland cement based or blended hydraulic-cement-based formulation provided or approved by resilient-product manufacturer for applications indicated.

B. Adhesives: Water-resistant type recommended by resilient-product manufacturer for resilient products and substrate conditions indicated.

C. Stair-Tread Nose Filler: Two-part epoxy compound recommended by resilient stair-tread manufacturer to fill nosing substrates that do not conform to tread contours.

PART 3 - EXECUTION

3.1 EXAMINATION

A. Examine substrates, with Installer present, for compliance with requirements for maximum moisture content and other conditions affecting performance of the Work.

1. Verify that finishes of substrates comply with tolerances and other requirements specified in other Sections and that substrates are free of cracks, ridges, depressions, scale, and foreign deposits that might interfere with adhesion of resilient products.

B. Proceed with installation only after unsatisfactory conditions have been corrected.

1. Installation of resilient products indicates acceptance of surfaces and conditions.

3.2 PREPARATION

A. Prepare substrates according to manufacturer's written instructions to ensure adhesion of resilient products.

B. Concrete Substrates for Resilient Stair Accessories: Prepare horizontal surfaces according to ASTM F 710.

1. Verify that substrates are dry and free of curing compounds, sealers, and hardeners.
2. Remove substrate coatings and other substances that are incompatible with adhesives and that contain soap, wax, oil, or silicone, using mechanical methods recommended by manufacturer. Do not use solvents.
3. Alkalinity and Adhesion Testing: Perform tests recommended by manufacturer. Proceed with installation only after substrate alkalinity falls within range on pH scale recommended by manufacturer in writing, but not less than 5 or more than 9 pH.
4. Moisture Testing: Proceed with installation only after substrates pass testing according to manufacturer's written recommendations, but not less stringent than the following:

   a. Perform anhydrous calcium chloride test according to ASTM F 1869. Proceed with installation only after substrates have maximum moisture-vapor-emission rate of 3 lb of water/1000 sq. ft. in 24 hours.
   b. Perform relative humidity test using in situ probes according to ASTM F 2170. Proceed with installation only after substrates have maximum 75 percent relative humidity level.

C. Fill cracks, holes, and depressions in substrates with trowelable leveling and patching compound; remove bumps and ridges to produce a uniform and smooth substrate.

D. Do not install resilient products until they are the same temperature as the space where they are to be installed.

1. At least 48 hours in advance of installation, move resilient products and installation materials into spaces where they will be installed.

E. Immediately before installation, sweep and vacuum clean substrates to be covered by resilient products.

3.3 RESILIENT BASE INSTALLATION

A. Comply with manufacturer's written instructions for installing resilient base.

B. Apply resilient base to walls, columns, pilasters, casework and cabinets in toe spaces, and other permanent fixtures in rooms and areas where base is required.

C. Install resilient base in lengths as long as practical without gaps at seams and with tops of adjacent pieces aligned.

D. Tightly adhere resilient base to substrate throughout length of each piece, with base in continuous contact with horizontal and vertical substrates.

E. Do not stretch resilient base during installation.

F. On masonry surfaces or other similar irregular substrates, fill voids along top edge of resilient base with manufacturer's recommended adhesive filler material.

G. Corners:
   1. Miter internal corners.
   2. At external corners, “V-cut” back of base strip to 2/3 of its thickness and fold.
   3. Form without producing discoloration (whitening) at bends.

3.4 RESILIENT ACCESSORY INSTALLATION

A. Comply with manufacturer's written instructions for installing resilient accessories.

B. Resilient Stair Accessories:

   1. Use stair-tread-nose filler to fill nosing substrates that do not conform to tread contours.
   2. Tightly adhere to substrates throughout length of each piece.

C. Resilient Molding Accessories: Butt to adjacent materials and tightly adhere to substrates throughout length of each piece. Install reducer strips at edges of floor covering that would otherwise be exposed.

3.5 CLEANING AND PROTECTION

A. Comply with manufacturer's written instructions for cleaning and protecting resilient products.

B. Perform the following operations immediately after completing resilient-product installation:

   1. Remove adhesive and other blemishes from surfaces.
   2. Sweep and vacuum horizontal surfaces thoroughly.
   3. Damp-mop horizontal surfaces to remove marks and soil.

C. Protect resilient products from mars, marks, indentations, and other damage from construction operations and placement of equipment and fixtures during remainder of construction period.

D. Cover resilient products subject to wear and foot traffic until Substantial Completion.

END OF SECTION

SECTION 096519

RESILIENT TILE FLOORING

PART 1 - GENERAL

1.1 RELATED DOCUMENTS

A. Drawings and general provisions of the Contract, including General and Supplementary Conditions and Division 01 Specification Sections, apply to this Section.

1.2 SUMMARY

A. Section Includes:

1. Vinyl composition floor tile.
2. Polyester composition floor tile.
3. Luxury vinyl floor tile.
4. Rubber floor tile.

1.3 ACTION SUBMITTALS

A. Product Data: For each type of product.

B. Shop Drawings: For each type of resilient floor tile.

1. Include floor tile layouts, edges, columns, doorways, enclosing partitions, built-in furniture, cabinets, and cutouts.
2. Show details of special patterns.

C. Samples for Initial Selection: For each type of floor tile indicated.

D. Samples for Verification: Full-size units of each color and pattern of floor tile required.

1.4 INFORMATIONAL SUBMITTALS

A. Qualification Data: For Installer.

1.5 CLOSEOUT SUBMITTALS

A. Maintenance Data: For each type of floor tile to include in maintenance manuals.

1.6 MATERIALS MAINTENANCE SUBMITTALS

A. Furnish extra materials that match products installed and that are packaged with protective covering for storage and identified with labels describing contents.

1. Floor Tile: Furnish 1 box for every 50 boxes or fraction thereof, of each type, color, and pattern of floor tile installed.

1.7 QUALITY ASSURANCE

A. Installer Qualifications: A qualified installer who employs workers for this Project who are competent in techniques required by manufacturer for floor tile installation indicated.

B. Mockups: Build mockups to verify selections made under sample submittals and to demonstrate aesthetic effects and set quality standards for materials and execution.

1. Build mockups for floor tile including resilient base and accessories.

a. Size: Minimum 20 sq. ft. for each type, color, and pattern in locations directed by Architect.

2. Approval of mockups does not constitute approval of deviations from the Contract Documents contained in mockups unless Architect specifically approves such deviations in writing.

1.8 DELIVERY, STORAGE, AND HANDLING

A. Store floor tile and installation materials in dry spaces protected from the weather, with ambient temperatures maintained within range recommended by manufacturer, but not less than 50 deg F or more than 90 deg F. Store floor tiles on flat surfaces.

1.9 FIELD CONDITIONS

A. Maintain ambient temperatures within range recommended by manufacturer, but not less than 70 deg F or more than 95 deg F, in spaces to receive floor tile during the following time periods:

1. 48 hours before installation.
2. During installation.
3. 48 hours after installation.

B. After installation and until Substantial Completion, maintain ambient temperatures within range recommended by manufacturer, but not less than 55 deg F or more than 95 deg F.

C. Close spaces to traffic during floor tile installation.

D. Close spaces to traffic for 48 hours after floor tile installation.

E. Install floor tile after other finishing operations, including painting, have been completed.

PART 2 - PRODUCTS

2.1 VINYL COMPOSITION FLOOR TILE: VCT-1

A. Basis of Design Product: Subject to compliance with requirements, provide Armstrong; Standard Excelon, or comparable product by one of the following:

1. Mannington Commercial.
2. Johnsonite; Azrock Collection VCT.

B. Tile Standard: ASTM F 1066, Class 2, through pattern.

C. Wearing Surface: Smooth.

D. Thickness: 0.125 inch.

E. Size: 12 by 12 inches.

F. Refer to Section 090600 for colors.

2.2 POLYESTER COMPOSITION FLOOR TILE: VCT-2, VCT-3, VCT-4, VCT-5

A. Basis of Design Product: Subject to compliance with requirements, provide Armstrong; Migrations BBT, or comparable product by one of the following:

1. Mannington Commercial.
2. Johnsonite; Azrock Collection VCT.

B. Tile Standard: ASTM F 2982, through pattern.

C. Wearing Surface: Smooth.

D. Thickness: 0.125 inch.

E. Size: 12 by 12 inches.

F. Refer to Section 090600 for colors.

2.3 LUXURY VINYL FLOOR TILE: LVT (Base Bid and Alternate Bid)

A. Basis of Design Product: Subject to compliance with requirements, provide Armstrong; Natural Creations LVT, or comparable product by one of the following:

1. Mannington Commercial.
2. Johnsonite; Azrock Collection VCT.

B. Tile Standard: ASTM F 1700. Class III, Printed Film Vinyl Tile, Type B embossed surface.

C. Wearing Surface: Smooth.

D. Thickness: 0.125 inch.

E. Refer to Section 090600 for sizes and colors.

2.4 RUBBER FLOOR TILE

A. Basis of Design Product: Subject to compliance with requirements, provide Johnsonite; Microtone Rubber Tile Flooring, or comparable product by one of the following:

1. Flexco.
2. Mannington Commercial.

B. Tile Standard: ASTM F 1344. Class I-B, Homogeneous Rubber Tile, through mottled.

C. Wearing Surface: Hammered texture.

D. Thickness: 0.080 inch.

E. Size: 24 by 24 inches.

F. Refer to Section 090600 for colors.

2.5 INSTALLATION MATERIALS

A. Trowelable Leveling and Patching Compounds: Latex-modified, portland cement based or blended hydraulic-cement-based formulation provided or approved by floor tile manufacturer for applications indicated.

B. Adhesives: Water-resistant type recommended by floor tile and adhesive manufacturers to suit floor tile and substrate conditions indicated.

C. Floor Polish: Provide protective, liquid floor-polish products recommended by floor tile manufacturer.

PART 3 - EXECUTION

3.1 EXAMINATION

A. Examine substrates, with Installer present, for compliance with requirements for maximum moisture content and other conditions affecting performance of the Work.

1. Verify that finishes of substrates comply with tolerances and other requirements specified in other Sections and that substrates are free of cracks, ridges, depressions, scale, and foreign deposits that might interfere with adhesion of floor tile.

B. Proceed with installation only after unsatisfactory conditions have been corrected.

3.2 PREPARATION

A. Prepare substrates according to floor tile manufacturer's written instructions to ensure adhesion of resilient products.

B. Concrete Substrates: Prepare according to ASTM F 710.

1. Verify that substrates are dry and free of curing compounds, sealers, and hardeners.
2. Remove substrate coatings and other substances that are incompatible with adhesives and that contain soap, wax, oil, or silicone, using mechanical methods recommended by floor tile manufacturer. Do not use solvents.

3. Alkalinity and Adhesion Testing: Perform tests recommended by floor tile manufacturer. Proceed with installation only after substrate alkalinity falls within range on pH scale recommended by manufacturer in writing, but not less than 5 or more than 9 pH.
4. Moisture Testing: Proceed with installation only after substrates pass testing according to floor tile manufacturer's written recommendations, but not less stringent than the following:

    a. Perform anhydrous calcium chloride test according to ASTM F 1869. Proceed with installation only after substrates have maximum moisture-vapor-emission rate of 3 lb of water/1000 sq. ft. (1.36 kg of water/92.9 sq. m) in 24 hours.
    b. Perform relative humidity test using in situ probes according to ASTM F 2170. Proceed with installation only after substrates have a maximum 75 percent relative humidity level.

C. Fill cracks, holes, and depressions in substrates with trowelable leveling and patching compound; remove bumps and ridges to produce a uniform and smooth substrate.

D. Do not install floor tiles until they are the same temperature as the space where they are to be installed.

1. At least 48 hours in advance of installation, move resilient floor tile and installation materials into spaces where they will be installed.

E. Immediately before installation, sweep and vacuum clean substrates to be covered by resilient floor tile.

F. Water-jet cut all arcs in floor patterns. Field cutting is not acceptable for arcs/radius.

3.3 FLOOR TILE INSTALLATION

A. Comply with manufacturer's written instructions for installing floor tile.

B. Lay out floor tiles from center marks established with principal walls, discounting minor offsets, so tiles at opposite edges of room are of equal width. Adjust as necessary to avoid using cut widths that equal less than one-half tile at perimeter.

1. Lay tiles in pattern indicated.

C. Match floor tiles for color and pattern by selecting tiles from cartons in the same sequence as manufactured and packaged, if so numbered. Discard broken, cracked, chipped, or deformed tiles.

1. Lay tiles in pattern of colors and sizes indicated.

D. Scribe, cut, and fit floor tiles to butt neatly and tightly to vertical surfaces and permanent fixtures including built-in furniture, cabinets, pipes, outlets, and door frames.

E. Extend floor tiles into toe spaces, door reveals, closets, and similar openings. Extend floor tiles to center of door openings.

F. Maintain reference markers, holes, and openings that are in place or marked for future cutting by repeating on floor tiles as marked on substrates. Use chalk or other nonpermanent marking device.

G. Install floor tiles on covers for telephone and electrical ducts, building expansion-joint covers, and similar items in finished floor areas. Maintain overall continuity of color and pattern between pieces of tile installed on covers and adjoining tiles. Tightly adhere tile edges to substrates that abut covers and to cover perimeters.

H. Adhere floor tiles to flooring substrates using a full spread of adhesive applied to substrate to produce a completed installation without open cracks, voids, raising and puckering at joints, telegraphing of adhesive spreader marks, and other surface imperfections.

3.4 CLEANING AND PROTECTION

A. Comply with manufacturer's written instructions for cleaning and protecting floor tile.

B. Perform the following operations immediately after completing floor tile installation:

1. Remove adhesive and other blemishes from surfaces.
2. Sweep and vacuum surfaces thoroughly.
3. Damp-mop surfaces to remove marks and soil.

C. Protect floor tile from mars, marks, indentations, and other damage from construction operations and placement of equipment and fixtures during remainder of construction period.

D. Floor Polish: Building maintenance staff will apply liquid floor polish.

E. Cover floor tile until Substantial Completion.

END OF SECTION

SECTION 096723

RESINOUS FLOORING

PART 1 - GENERAL

1.1 RELATED DOCUMENTS

A. Drawings and general provisions of the Contract, including General and Supplementary Conditions and Division 01 Specification Sections, apply to this Section.

1.2 SUMMARY

A. Section includes:

1. Epoxy resinous flooring system, with integral cove base.

1.3 PREINSTALLATION MEETINGS

A. Preinstallation Conference: Conduct conference at Project site.

1.4 ACTION SUBMITTALS

A. Product Data: For each type of product. Include manufacturer's technical data, application instructions, and recommendations for each resinous flooring component required.

B. Samples for Initial Selection: For each type of exposed finish required.

C. Samples for Verification: For each resinous flooring system required, 6 inches square, applied to a rigid backing by Installer for this Project.

1.5 INFORMATIONAL SUBMITTALS

A. Installer Certificates: Signed by manufacturer certifying that installers comply with specified requirements.

B. Material Certificates: For each resinous flooring component, from manufacturer.

C. Material Test Reports: For each resinous flooring system, by a qualified testing agency.

1.6 CLOSEOUT SUBMITTALS

A. Maintenance Data: For resinous flooring to include in maintenance manuals.

1.7 MOCKUP

A. Apply mockup to verify selections made under sample submittals and to demonstrate aesthetic effects, slip resistance, and set quality standards for materials and execution.

1. Location and Extent: As selected by Architect.
2. Simulate finished lighting conditions for Architect’s review of mockups.

1.8 QUALITY ASSURANCE

A. Installer Qualifications: An authorized representative who is trained and approved by manufacturer.

B. Engage an installer who is certified in writing by resinous flooring manufacturer as qualified to apply resinous flooring systems indicated.

C. Mockups: Build mockups to verify selections made under Sample submittals and to demonstrate aesthetic effects and set quality standards for materials and execution.

1. Apply full-thickness mockups on 96-inch-square floor area selected by Architect.

a. Include 96-inch length of integral cove base with inside and outside corner.

2. Simulate finished lighting conditions for Architect's review of mockups.
3. Approval of mockups does not constitute approval of deviations from the Contract Documents contained in mockups unless Architect specifically approves such deviations in writing.

1.9 DELIVERY, STORAGE AND HANDLING

A. Deliver materials in original packages and containers, with seals unbroken, bearing manufacturer's labels indicating brand name and directions for storage and mixing with other components.

1.10 FIELD CONDITIONS

A. Environmental Limitations: Comply with resinous flooring manufacturer's written instructions for substrate temperature, ambient temperature, moisture, ventilation, and other conditions affecting resinous flooring application.

B. Lighting: Provide permanent lighting or, if permanent lighting is not in place, simulate permanent lighting conditions during resinous flooring application.

C. Close spaces to traffic during resinous flooring application and for 24 hours after application unless manufacturer recommends a longer period.

PART 2 - PRODUCTS

2.1 EPOXY RESINOUS FLOORING SYSTEMS

A. Resinous Flooring System: Abrasion-, impact-, and chemical-resistant, aggregate-filled, and resin-based monolithic floor surfacing designed to produce a seamless floor and integral cove base.

1. Basis of Design Product Subject to compliance with requirements, provide products by Sherwin-Williams Company, General Polymers, or comparable product by one of the following:

a. Crossfield Products Corp.
b. Duraflex, Inc.
c. Key Resin Company.
d. Stonhard, Inc.

B. System Characteristics:

1. Color and Pattern: Refer to 090600 Color Legend.
2. Wearing Surface: Manufacturer's standard wearing surface.
3. Integral Cove Base: 6 inches.
4. Overall System Thickness: nominal 2 mm.

C. Primer: Type recommended by resinous flooring manufacturer for substrate and resinous flooring system indicated.

D. Patching and Fill Material: Resinous product of or approved by resinous flooring manufacturer and recommended by manufacturer for application indicated.

E. Body Coats:

1. Resin: Epoxy.
2. Formulation Description: 100 percent solids.
3. Application Method: Self-leveling slurry.
4. Number of Coats: One.
5. Aggregates: Manufacturer's standard.

F. Topcoats: Sealing or finish coats.

1. Resin: Epoxy.
2. Formulation Description: 100 percent solids.
3. Type: Clear.
4. Number of Coats: One.
5. Finish: Matte.

G. System Physical Properties: Provide resinous flooring system with the following minimum physical property requirements when tested according to test methods indicated:

1. Compressive Strength: 12,500 psi minimum according to ASTM C 579.
2. Tensile Strength: 4000 psi minimum according to ASTM C 307.
3. Flexural Modulus of Elasticity: 6,250 psi minimum according to ASTM C 580.
4. Water Absorption: 0.04 percent maximum according to ASTM C 413.
5. Indentation: 0.025 percent maximum according to MIL-D-3134J.
6. Impact Resistance: No chipping, cracking, or delamination and not more than 1/16-inch permanent indentation according to MIL-D-3134J.
7. Resistance to Elevated Temperature: No slip or flow of more than 1/16 inch according to MIL-D-3134J.
8. Abrasion Resistance: 0.8 – 0.9 maximum weight loss according to ASTM D 4060.

PART 3 - EXECUTION

3.1 PREPARATION

A. Prepare and clean substrates according to resinous flooring manufacturer's written instructions for substrate indicated. Provide clean, dry substrate for resinous flooring application.

B. Concrete Substrates: Provide sound concrete surfaces free of laitance, glaze, efflorescence, curing compounds, form-release agents, dust, dirt, grease, oil, and other contaminants incompatible with resinous flooring.

1. Roughen concrete substrates as follows:

a. Shot-blast surfaces with an apparatus that abrades the concrete surface, contains the dispensed shot within the apparatus, and recirculates the shot by vacuum pickup.
b. Comply with ASTM C 811 requirements unless manufacturer's written instructions are more stringent.

2. Repair damaged and deteriorated concrete according to resinous flooring manufacturer's written instructions.
3. Verify that concrete substrates are dry and moisture-vapor emissions are within acceptable levels according to manufacturer's written instructions.

a. Anhydrous Calcium Chloride Test: ASTM F 1869. Proceed with application of resinous flooring only after substrates have maximum moisture-vapor-emission rate of 3 lb of water/1000 sq. ft. of slab area in 24 hours.
b. Plastic Sheet Test: ASTM D 4263. Proceed with application only after testing indicates absence of moisture in substrates.
c. Relative Humidity Test: Use in situ probes, ASTM F 2170. Proceed with installation only after substrates have a maximum 75 percent relative humidity level measurement.

4. Alkalinity and Adhesion Testing: Verify that concrete substrates have pH within acceptable range. Perform tests recommended by manufacturer. Proceed with application only after substrates pass testing.

C. Patching and Filling: Use patching and fill material to fill holes and depressions in substrates according to manufacturer's written instructions.

1. Control Joint Treatment: Treat control joints and other nonmoving substrate cracks to prevent cracks from reflecting through resinous flooring according to manufacturer's written instructions.

D. Resinous Materials: Mix components and prepare materials according to resinous flooring manufacturer's written instructions.

3.2 APPLICATION

A. Apply components of resinous flooring system according to manufacturer's written instructions to produce a uniform, monolithic wearing surface of thickness indicated.

1. Coordinate application of components to provide optimum adhesion of resinous flooring system to substrate, and optimum intercoat adhesion.

2. Cure resinous flooring components according to manufacturer's written instructions. Prevent contamination during application and curing processes.
3. Expansion and Isolation Joint Treatment: At substrate expansion and isolation joints, comply with resinous flooring manufacturer's written instructions.

B. Primer: Apply primer over prepared substrate at manufacturer's recommended spreading rate.

C. Integral Cove Base: Apply cove base mix to wall surfaces before applying flooring. Apply according to manufacturer's written instructions and details, including those for taping, mixing, priming, troweling, sanding, and topcoating of cove base. Round internal and external corners.

1. Integral Cove Base: 4 inches high.

D. Self-Leveling Body Coats: Apply self-leveling slurry body coats in thickness indicated for flooring system.

1. Aggregates: Broadcast aggregates at rate recommended by manufacturer and, after resin is cured, remove excess aggregates to provide surface texture indicated.

E. Troweled or Screeded Body Coats: Apply troweled or screeded body coats in thickness indicated for flooring system. Hand or power trowel and grout to fill voids. When body coats are cured, remove trowel marks and roughness using method recommended by manufacturer.

F. Topcoats: Apply topcoats in number indicated for flooring system and at spreading rates recommended in writing by manufacturer and to produce wearing surface indicated.

3.3 FIELD QUALITY CONTROL

A. Material Sampling: Owner may, at any time and any number of times during resinous flooring application, require material samples for testing for compliance with requirements.

1. Owner will engage an independent testing agency to take samples of materials being used. Material samples will be taken, identified, sealed, and certified in presence of Contractor.
2. Testing agency will test samples for compliance with requirements, using applicable referenced testing procedures or, if not referenced, using testing procedures listed in manufacturer's product data.
3. If test results show applied materials do not comply with specified requirements, pay for testing, remove noncomplying materials, prepare surfaces coated with unacceptable materials, and reapply flooring materials to comply with requirements.

B. Core Sampling: At the direction of Owner and at locations designated by Owner, take one core sample per 1000 sq. ft. of resinous flooring, or portion of, to verify thickness. For each sample that fails to comply with requirements, take two additional samples. Repair damage caused by coring. Correct deficiencies in installed flooring as indicated by testing.

3.4 PROTECTION

A. Protect resinous flooring from damage and wear during the remainder of construction period. Use protective methods and materials, including temporary covering, recommended in writing by resinous flooring manufacturer.

END OF SECTION

SECTION 096813

TILE CARPETING

PART 1 - GENERAL

1.1 RELATED DOCUMENTS

A. Drawings and general provisions of the Contract, including General and Supplementary Conditions and Division 01 Specification Sections, apply to this Section.

1.2 SUMMARY

A. Section includes modular carpet tile.

1.3 PREINSTALLATION MEETINGS

A. Preinstallation Conference: Conduct conference at Project site.

1. Review methods and procedures related to carpet tile installation including, but not limited to, the following:

   a. Review delivery, storage, and handling procedures.
   b. Review ambient conditions and ventilation procedures.
   c. Review subfloor preparation procedures.

1.4 ACTION SUBMITTALS

A. Product Data: For each type of product.

1. Include manufacturer's written data on physical characteristics, durability, and fade resistance.
2. Include manufacturer's written installation recommendations for each type of substrate.

B. Shop Drawings: For carpet tile installation, plans showing the following:

1. Columns, doorways, enclosing walls or partitions, built-in cabinets, and locations where cutouts are required in carpet tiles.
2. Carpet tile type, color, and dye lot.
3. Type of subfloor.
4. Type of installation.
5. Pattern of installation.
6. Pattern type, location, and direction.
7. Pile direction.
8. Type, color, and location of insets and borders.
9. Type, color, and location of edge, transition, and other accessory strips.
10. Transition details to other flooring materials.

C. Samples for Initial Selection: For each type of carpet tile.

1. Include Samples of exposed edge, transition, and other accessory stripping involving color or finish selection.

D. Samples for Verification: For each of the following products and for each color and texture required. Label each Sample with manufacturer's name, material description, color, pattern, and designation indicated on Drawings and in schedules.

1. Carpet Tile: Full-size Sample.
2. Exposed Edge, Transition, and other Accessory Stripping: 12-inch-long Samples.

E. Product Schedule: For carpet tile. Use same designations indicated on Drawings.

1.5 INFORMATIONAL SUBMITTALS

A. Qualification Data: For Installer.

B. Product Test Reports: For carpet tile, for tests performed by a qualified testing agency.

C. Sample Warranty: For special warranty.

1.6 CLOSEOUT SUBMITTALS

A. Maintenance Data: For carpet tiles to include in maintenance manuals. Include the following:

1. Methods for maintaining carpet tile, including cleaning and stain-removal products and procedures and manufacturer's recommended maintenance schedule.
2. Precautions for cleaning materials and methods that could be detrimental to carpet tile.

1.7 MAINTENANCE MATERIAL SUBMITTALS

A. Furnish extra materials, from the same product run, that match products installed and that are packaged with protective covering for storage and identified with labels describing contents.

1. Carpet Tile: Full-size units equal to 5 percent of amount installed for each type indicated, but not less than 12 sq. yd.

1.8 QUALITY ASSURANCE

A. Installer Qualifications: An experienced installer who is certified by the International Certified Floorcovering Installers Association.

B. Mockups: Build mockups to verify selections made under Sample submittals, to demonstrate aesthetic effects, and to set quality standards for fabrication and installation.

1. Build mockups at locations and in sizes per Architect.

1.9 DELIVERY, STORAGE, AND HANDLING

A. Comply with CRI's "CRI Carpet Installation Standard."

1.10 FIELD CONDITIONS

A. Comply with CRI's "CRI Carpet Installation Standard" for temperature, humidity, and ventilation limitations.

B. Environmental Limitations: Do not deliver or install carpet tiles until spaces are enclosed and weathertight, wet-work in spaces is complete and dry, and ambient temperature and humidity conditions are maintained at levels planned for building occupants during the remainder of the construction period.

C. Do not install carpet tiles over concrete slabs until slabs have cured and are sufficiently dry to bond with adhesive and concrete slabs have pH range recommended by carpet tile manufacturer.

D. Where demountable partitions or other items are indicated for installation on top of carpet tiles, install carpet tiles before installing these items.

1.11 WARRANTY

A. Special Warranty for Carpet Tiles: Manufacturer agrees to repair or replace components of carpet tile installation that fail in materials or workmanship within specified warranty period.

1. Warranty does not include deterioration or failure of carpet tile due to unusual traffic, failure of substrate, vandalism, or abuse.
2. Failures include, but are not limited to, the following:

a. More than 10 percent edge raveling, snags, and runs.
b. Dimensional instability.
c. Excess static discharge.
d. Loss of tuft-bind strength.
e. Loss of face fiber.
f. Delamination.

3. Warranty Period: Lifetime commercial limited per Manufacturer.

PART 2 - PRODUCTS

2.1 CARPET TILE

A. CP-1: Provide carpet in type and style as indicated and conforming to the following criteria:

1. Manufacturer: Shaw Contract.
2. Style Name: Temp Tile.
3. Style Number: 5T019.
4. Construction: Multi-level pattern loop.
5. Face Weight: 16 oz per sq yd.
6. Gauge: 1/12 inch.
7. Stitch Rate: 9 per inch
8. Pile Height (average): 0.114 inch
9. Fiber System: eco solution q nylon.
10. Dye Method: 100% Solution Dyed.
11. Primary Backing: Synthetic.

12. Secondary Backing: ecoworx tile.
13. Color: As indicated in Section 090600.
14. Static Generation: 3.0 kV or less (AATCC-134); Permanent Conductive Fiber.
15. Recycled Content: From manufacturer.

B. CP-2: Provide carpet in type and style as indicated and conforming to the following criteria:

1. Manufacturer: Shaw Contract.
2. Style Name: Think Tile.
3. Style Number: 5T186.
4. Construction: Multi-level pattern loop.
5. Face Weight: 16 oz per sq yd.
6. Gauge: 1/10 inch.
7. Stitch Rate: 10 per inch
8. Pile Height (average): 0.095 inch
9. Fiber System: eco solution q nylon.
10. Dye Method: 100% Solution Dyed.
11. Primary Backing: Synthetic.
12. Secondary Backing: ecoworx tile.
13. Color: As indicated in Section 090600.
14. Static Generation: 3.0 kV or less (AATCC-134); Permanent Conductive Fiber.
15. Recycled Content: From manufacturer.

C. CP-3, CP-4: Provide carpet in type and style as indicated and conforming to the following criteria:

1. Manufacturer: Shaw Contract.
2. Style Name: Impact Tile.
3. Style Number: 5T188.
4. Construction: Multi-level pattern loop.
5. Face Weight: 17 oz per sq yd.
6. Gauge: 1/10 inch.
7. Stitch Rate: 11 per inch
8. Pile Height (average): 0.101 inch
9. Fiber System: eco solution q nylon.
10. Dye Method: 100% Solution Dyed.
11. Primary Backing: Synthetic.
12. Secondary Backing: ecoworx tile.
13. Color: As indicated in Section 090600.
14. Static Generation: 3.0 kV or less (AATCC-134); Permanent Conductive Fiber.
15. Recycled Content: From manufacturer.

D. CP-5, CP-6, CP-7: Provide carpet in type and style as indicated and conforming to the following criteria:

1. Manufacturer: Shaw Contract.
2. Style Name: Engage Tile.
3. Style Number: 5T187.
4. Construction: Multi-level pattern loop.
5. Face Weight: 16 oz per sq yd.
6. Gauge: 1/10 inch.
7. Stitch Rate: 10 per inch
8. Pile Height (average): 0.095 inch
9. Fiber System: eco solution q nylon.
10. Dye Method: 100% Solution Dyed.
11. Primary Backing: Synthetic.

12. Secondary Backing: ecoworx tile.
13. Color: As indicated in Section 090600.
14. Static Generation: 3.0 kV or less (AATCC-134); Permanent Conductive Fiber.
15. Recycled Content: From manufacturer.

E. Applied Treatments:

1. Soil-Resistance Treatment: Manufacturer's standard treatment.

F. Performance Characteristics:

1. Critical Radiant Flux Classification: Not less than 0.45 W/sq. cm according to NFPA 253.

2.2 INSTALLATION ACCESSORIES

A. Trowelable Leveling and Patching Compounds: Latex-modified, hydraulic-cement-based formulation provided or recommended by carpet tile manufacturer.

B. Adhesives: Water-resistant, mildew-resistant, nonstaining, pressure-sensitive type to suit products and subfloor conditions indicated, that comply with flammability requirements for installed carpet tile, and are recommended by carpet tile manufacturer for releasable installation.

C. Edge Strips: Extruded or molded heavy-duty rubber carpet edge strip of profile and width shown, of height required to protect exposed edge of carpet, and of maximum lengths to minimize running joints., color as selected by Architect.

PART 3 - EXECUTION

3.1 EXAMINATION

A. Examine substrates, areas, and conditions, with Installer present, for compliance with requirements for maximum moisture content, alkalinity range, installation tolerances, and other conditions affecting carpet tile performance.

B. Examine carpet tile for type, color, pattern, and potential defects.

C. Concrete Slabs: Verify that finishes comply with requirements specified in Section 033000 "Cast-in-Place Concrete" and that surfaces are free of cracks, ridges, depressions, scale, and foreign deposits.

1. Moisture Testing: Perform tests so that each test area does not exceed 1000 sq. ft., and perform no fewer than three tests in each installation area and with test areas evenly spaced in installation areas.

a. Anhydrous Calcium Chloride Test: ASTM F 1869. Proceed with installation only after substrates have maximum moisture-vapor-emission rate of 3 lb of water/1000 sq. ft. in 24 hours.
b. Relative Humidity Test: Using in situ probes, ASTM F 2170. Proceed with installation only after substrates have a maximum 75 percent relative humidity level measurement.

c. Perform additional moisture tests recommended in writing by adhesive and carpet tile manufacturers. Proceed with installation only after substrates pass testing.

D. Proceed with installation only after unsatisfactory conditions have been corrected.

3.2 PREPARATION

A. General: Comply with CRI's "Carpet Installation Standards" and with carpet tile manufacturer's written installation instructions for preparing substrates indicated to receive carpet tile.

B. Use trowelable leveling and patching compounds, according to manufacturer's written instructions, to fill cracks, holes, depressions, and protrusions in substrates. Fill or level cracks, holes and depressions 1/8-inch-wide or wider and protrusions more than 1/32 inch, unless more stringent requirements are required by manufacturer's written instructions.

C. Concrete Substrates: Remove coatings, including curing compounds, and other substances that are incompatible with adhesives and that contain soap, wax, oil, or silicone, without using solvents. Use mechanical methods recommended in writing by adhesive and carpet tile manufacturers.

D. Broom and vacuum clean substrates to be covered immediately before installing carpet tile.

3.3 INSTALLATION

A. General: Comply with CRI's "CRI Carpet Installation Standard," Section 18, "Modular Carpet" and with carpet tile manufacturer's written installation instructions.

B. Installation Method: Glue down; install every tile with full-spread, releasable, pressure-sensitive adhesive.

C. Maintain dye lot integrity. Do not mix dye lots in same area.

D. Maintain pile-direction patterns indicated on Drawings.

E. Cut and fit carpet tile to butt tightly to vertical surfaces, permanent fixtures, and built-in furniture including cabinets, pipes, outlets, edgings, thresholds, and nosings. Bind or seal cut edges as recommended by carpet tile manufacturer.

F. Extend carpet tile into toe spaces, door reveals, closets, open-bottomed obstructions, removable flanges, alcoves, and similar openings.

G. Maintain reference markers, holes, and openings that are in place or marked for future cutting by repeating on finish flooring as marked on subfloor. Use nonpermanent, nonstaining marking device.

H. Install pattern parallel to walls and borders.

3.4 CLEANING AND PROTECTION

A. Perform the following operations immediately after installing carpet tile:

1. Remove excess adhesive, seam sealer, and other surface blemishes using cleaner recommended by carpet tile manufacturer.
2. Remove yarns that protrude from carpet tile surface.
3. Vacuum carpet tile using commercial machine with face-beater element.

B. Protect installed carpet tile to comply with CRI's "Carpet Installation Standard," Section 20, "Protecting Indoor Installations."

C. Protect carpet tile against damage from construction operations and placement of equipment and fixtures during the remainder of construction period. Use protection methods indicated or recommended in writing by carpet tile manufacturer.

END OF SECTION

SECTION 097723

TACKABLE WALL PANELS

PART 1 - GENERAL

1.1 RELATED DOCUMENTS

A. Drawings and general provisions of the Contract, including General and Supplementary Conditions and Division 01 Specification Sections, apply to this Section.

1.2 SUMMARY

A. Section includes fabric-wrapped tackable wall panels.

1.3 PREINSTALLATION MEETINGS

A. Preinstallation Conference: Conduct conference at Project site.

1.4 ACTION SUBMITTALS

A. Product Data: For each type of product.

1. Include fabric facing, panel edge, core material, and mounting indicated.

B. Shop Drawings: For panel assembly and installation.

1. Include plans, elevations, sections, and mounting devices and details.
2. Include details at panel head, base, joints, and corners; and details at ceiling, floor base, and wall intersections. Indicate panel edge profile and core materials.
3. Include details at cutouts and penetrations for other work.
4. Include direction of fabric weave and pattern matching.

C. Samples for Initial Selection: For each type of fabric facing.

1. Include Samples of hardware and accessories involving color or finish selection.

D. Samples for Verification: For the following products:

1. Panel Edge: 12-inch-long Sample(s) showing each edge profile, corner, and finish.
2. Core Material: 12-inch-square Sample at corner.

1.5 INFORMATIONAL SUBMITTALS

A. Coordination Drawings: Elevations and other details, drawn to scale, on which the following items are shown and coordinated with each other, using input from installers of the items involved:

1. Electrical outlets, switches, and thermostats.
2. Items penetrating or covered by panels including the following:

    a. Lighting fixtures.
    b. Air outlets and inlets.
    c. Speakers.
    d. Alarms.
    e. Sprinklers.
    f. Access panels.

3. Show operation of hinged and sliding components covered by or adjacent to panels.

B. Product Certificates: For each type of panel.

C. Sample Warranty: For manufacturer's special warranty.

1.6 CLOSEOUT SUBMITTALS

A. Maintenance Data: For each type of panel to include in maintenance manuals. Include fabric manufacturers' written cleaning and stain-removal instructions.

1.7 MAINTENANCE MATERIAL SUBMITTALS

A. Furnish extra materials from same production run that match products installed and that are packaged with protective covering for storage and identified with labels describing contents.

1. Fabric: For each fabric, color, and pattern installed, provide length equal to 10 percent of amount installed, but no fewer than 10 sq. yd., full width of bolt.
2. Mounting Devices: Full-size units equal to 5 percent of amount installed, but no fewer than five devices, including unopened adhesives.

1.8 DELIVERY, STORAGE, AND HANDLING

A. Comply with fabric and panel manufacturers' written instructions for minimum and maximum temperature and humidity requirements for shipment, storage, and handling.

B. Deliver materials and panels in unopened bundles and store in a temperature-controlled dry place with adequate air circulation.

1.9 FIELD CONDITIONS

A. Environmental Limitations: Do not install panels until spaces are enclosed and weathertight, wet-work in spaces is complete and dry, work at and above ceilings is complete, and ambient temperature and humidity conditions are maintained at the levels indicated for Project when occupied for its intended use.

B. Lighting: Do not install panels until a lighting level of not less than 50 fc is provided on surfaces to receive the panels.

C. Air-Quality Limitations: Protect panels from exposure to airborne odors such as tobacco smoke, and install panels under conditions free from odor contamination of ambient air.

D. Field Measurements: Verify panel locations and actual dimensions of openings and penetrations by field measurements before fabrication, and indicate them on Shop Drawings.

1.10 WARRANTY

A. Special Warranty: Manufacturer agrees to repair or replace panels and components that fail in materials or workmanship within specified warranty period.

1. Failures include, but are not limited to, the following:

a. Fabric sagging, distorting, or releasing from panel edge.
b. Warping of core.

2. Warranty Period: Two years from date of Substantial Completion.

PART 2 - PRODUCTS

2.1 PERFORMANCE REQUIREMENTS

A. Fire-Test-Response Characteristics: Panels shall comply with "Surface-Burning Characteristics" or "Fire Growth Contribution" Subparagraph below, or both, as determined by testing identical products by UL or another testing and inspecting agency acceptable to authorities having jurisdiction:

1. Surface-Burning Characteristics: Comply with ASTM E 84 or UL 723; testing by a qualified testing agency. Identify products with appropriate markings of applicable testing agency.

a. Flame-Spread Index: 25 or less.
b. Smoke-Developed Index: 450 or less.

2. Fire Growth Contribution: Comply with acceptance criteria of local code and authorities having jurisdiction when tested according to NFPA 265 Method B Protocol or NFPA 286.

2.2 MANUFACTURERS

A. Refer to Section 090600 for styles and colors.

B. Tackable Wall Panel.

1. Basis-of-Design Product: Subject to compliance with requirements, provide products by Kenetics Noise Control, Inc., or a comparable product by one of the following:

a. Conwed Designscape; an Owens Corning company.
b. Golterman & Sabo.
c. Panel Solutions, Inc.
d. Sound Seal.
e. Wall Technology, Inc.; an Owens Corning company.

2.3 MATERIALS

A. Tackable Wall Panels: Constructed of one piece of mineral fiber core similar with minimum of 22 pcf density noncombustible and dimensionally stable and impact-resistant. Each one-piece unit shall be 1/2-inch thick, with height/width as required.

1. Sizes: As indicated.
2. Edges: Square.
3. Fire Rating Classification: Class A.
4. Surface Finish:

   a. Fabric: Refer to Section 090600.
   b. Adjacent panels shall be covered with fabric from same dye lot.

B. Mounting: Provide aluminum leveling angle at base of panel and adhesive to attach panels to wall. Leveling angle may be deleted where tackable wall panels can be installed on top of countertop backsplash.

2.4 FABRICATION

A. Standard Construction: Use manufacturer's standard construction unless otherwise indicated; with facing material applied to face, edges, and back border of dimensionally stable core; and with rigid edges to reinforce panel perimeter against warpage and damage.

B. Edge Hardening: For mineral-fiber board cores, chemically harden core edges and areas of core where mounting devices are attached.

C. Core-Face Layer: Evenly stretched over core face and edges and securely attached to core; free from puckers, ripples, wrinkles, or sags.

D. Facing Material: Apply fabric fully covering visible surfaces of panel; with material stretched straight, on the grain, tight, square, and free from puckers, ripples, wrinkles, sags, blisters, seams, adhesive, or other visible distortions or foreign matter.

1. Square Corners: Tailor corners.
2. Radius and Other Nonsquare Corners: Attach material so there are no seams or gathering of material.
3. Fabrics with Directional or Repeating Patterns or Directional Weave: Mark fabric top and attach fabric in same direction so pattern or weave matches in adjacent panels.

E. Dimensional Tolerances of Finished Panels: Plus or minus 1/16 inch for the following:

1. Thickness.
2. Edge straightness.
3. Overall length and width.
4. Squareness from corner to corner.
5. Chords, radii, and diameters.

PART 3 - EXECUTION

3.1 EXAMINATION

A. Examine fabric, fabricated panels, substrates, areas, and conditions for compliance with requirements, installation tolerances, and other conditions affecting panel performance.

B. Proceed with installation only after unsatisfactory conditions have been corrected.

3.2 INSTALLATION

A. Install panels in locations indicated. Unless otherwise indicated, install panels with vertical surfaces and edges plumb, top edges level and in alignment with other panels, faces flush, and scribed to fit adjoining work accurately at borders and at penetrations.

B. Comply with manufacturer's written instructions for installation of panels using type of mounting devices indicated. Mount panels securely to supporting substrate.

C. Align fabric pattern and grain with adjacent panels unless indicated otherwise.

3.3 INSTALLATION TOLERANCES

A. Variation from Plumb and Level: Plus or minus 1/16 inch in 48 inches, noncumulative.

B. Variation of Joint Width: Not more than 1/32 inch wide from hairline in 48 inches, noncumulative.

3.4 CLEANING

A. Clip loose threads; remove pills and extraneous materials.

B. Clean panels on completion of installation to remove dust and other foreign materials according to manufacturer's written instructions.

END OF SECTION

SECTION 098433

SOUND-ABSORBING WALL UNITS

PART 1 - GENERAL

1.1 RELATED DOCUMENTS

A. Drawings and general provisions of the Contract, including General and Supplementary Conditions and Division 01 Specification Sections, apply to this Section.

1.2 SUMMARY

A. Section includes shop-fabricated, acoustical panel units tested for acoustical performance, including the following:

1. Sound-absorbing wall panels.

1.3 ACTION SUBMITTALS

A. Product Data: For each type of product.

1. Include fabric facing, panel edge, core material, and mounting indicated.

B. Shop Drawings: For unit assembly and installation.

1. Include plans, elevations, sections, and mounting devices and details.
2. Include details at panel head, base, joints, and corners; and details at ceiling, floor base, and wall intersections. Indicate panel edge profile and core materials.
3. Include details at cutouts and penetrations for other work.
4. Include direction of fabric weave and pattern matching.

C. Samples for Verification: For the following products:

1. Fabric: Full-width by approximately 36-inch-long Sample, but not smaller than required to show complete pattern repeat, from dye lot to be used for the Work, and with specified treatments applied. Mark top and face of fabric.
2. Panel Edge: 12-inch-long Sample(s) showing each edge profile, corner, and finish.
3. Core Material: 12-inch-square Sample at corner.

1.4 INFORMATIONAL SUBMITTALS

A. Product Certificates: For each type of unit.

B. Sample Warranty: For manufacturer's special warranty.

1.5 CLOSEOUT SUBMITTALS

A. Maintenance Data: For each type of unit to include in maintenance manuals. Include fabric manufacturers' written cleaning and stain-removal instructions.

1.6 MAINTENANCE MATERIAL SUBMITTALS

A. Furnish extra materials from same production run that match products installed and that are packaged with protective covering for storage and identified with labels describing contents.

1. Fabric: For each fabric, color, and pattern installed, provide length equal to 10 percent of amount installed, but no fewer than 10 sq. yd., full width of bolt.
2. Mounting Devices: Full-size units equal to 5 percent of amount installed, but no fewer than five devices, including unopened adhesives.

1.7 DELIVERY, STORAGE, AND HANDLING

A. Comply with fabric and unit manufacturers' written instructions for minimum and maximum temperature and humidity requirements for shipment, storage, and handling.

B. Deliver materials and units in unopened bundles and store in a temperature-controlled dry place with adequate air circulation.

1.8 FIELD CONDITIONS

A. Environmental Limitations: Do not install units until spaces are enclosed and weathertight, wet-work in spaces is complete and dry, work at and above ceilings is complete, and ambient temperature and humidity conditions are maintained at the levels indicated for Project when occupied for its intended use.

1.9 WARRANTY

A. Special Warranty: Manufacturer agrees to repair or replace units and components that fail in materials or workmanship within specified warranty period.

1. Failures include, but are not limited to the following:

a. Acoustical performance.
b. Fabric sagging, distorting, or releasing from panel edge.
c. Warping of core.

2. Warranty Period: Two years from date of Substantial Completion.

PART 2 - PRODUCTS

2.1 PERFORMANCE REQUIREMENTS

A. Fire-Test-Response Characteristics: Units shall comply with "Surface-Burning Characteristics" or "Fire Growth Contribution" Subparagraph below, or both, as determined by testing identical

products by UL or another testing and inspecting agency acceptable to authorities having jurisdiction:

1. Surface-Burning Characteristics: Comply with ASTM E 84 or UL 723; testing by a qualified testing agency. Identify products with appropriate markings of applicable testing agency.

    a. Flame-Spread Index: 25 or less.
    b. Smoke-Developed Index: 450 or less.

2. Fire Growth Contribution: Comply with acceptance criteria of local code and authorities having jurisdiction when tested according to NFPA 265 Method B Protocol or NFPA 286.

2.2 SOUND-ABSORBING WALL UNITS - VINYL

A. Sound-Absorbing Wall Panel: Manufacturer's standard panel construction consisting of facing material laminated to front face, edges, and back edge border of core.

B. Basis-of-Design Products: Subject to compliance with requirements, provide Acoustical wall panels manufactured by Kinetics Noise Control, or comparable product by one of the following:

1. Golterman & Sabo.
2. Wall Technology, Inc.
3. Panel Solutions, Inc.
4. Sound Seal.
5. Conwed Designscape; an Owens Corning company.
6. Mounting: Back mounted with manufacturer's standard impaling clips unless indicated otherwise.
7. Core: Glass-fiber board.
8. Edge Profile: Square.
9. Facing Material: Perforated vinyl.
10. Acoustical Performance: Sound absorption NRC of 1.05 according to ASTM C 423.
11. Nominal Core Thickness: 1 inch.
12. Panel Width: As indicated on Drawings.
13. Panel Height: As indicated on Drawings.

C. High- Impact Acoustical Panels:

1. Construction: (Equivalent to Kinetics Noise Control “High Impact HardSide”): Two-part composite panel of two-inch thick 6 -7 pcf noncombustible and dimensionally stable glass fiber core with 1/8-inch thick high-density impact-resistant skin laminated to core face.
2. Thickness: 2-1/8 inch.
3. Sizes: As indicated on the Drawings; maximum 4 x 10 foot individual panel size.
4. Edges: Square, chemically hardened.
5. NRC Range: 1.05 when tested in accordance with ASTM C423.
6. Fire Rating Classification: Class A.
7. Locations: C115 and C116.
8. Facing Material: Micro-perforated vinyl.

D. Finishes:

1. Panels shall be covered with vinyl material, as scheduled in Section 090600 – Room Finish Schedule - Color Legend.

a. Vinyl: Refer to Section 090600.
b. Color Control:

1) Adjacent panels of same color shall be covered with vinyl from same dye lot or run number.
2) In addition to being from same run, sequence range of the Panels covered in same color shall not exceed 2 sequence numbers within same room.

2.3 MATERIALS

A. Core Materials: Manufacturer's standard.

1. Glass-Fiber Board: ASTM C 612; of type standard with manufacturer; nominal density of 6 to 7 lb/cu. ft., dimensionally stable, molded rigid board; and with maximum flame-spread and smoke-developed indexes of 25 and 50, respectively.

B. Mounting Devices: Concealed on back of unit, recommended by manufacturer to support weight of unit, and as follows:

1. Impaling Clips: Manufacturer's standard.
2. Metal Clips or Bar Hangers: Manufacturer's standard two-part metal "Z" clips, with one part of each clip mechanically attached to back of unit and the other part to substrate, designed to permit unit removal.

2.4 FABRICATION

A. Standard Construction: Use manufacturer's standard construction unless otherwise indicated; with facing material applied to face, edges, and back border of dimensionally stable core; and with rigid edges to reinforce panel perimeter against warpage and damage.

B. Edge Hardening: For glass-fiber board cores, chemically harden core edges and areas of core where mounting devices are attached.

C. Core-Face Layer: Evenly stretched over core face and edges and securely attached to core; free from puckers, ripples, wrinkles, or sags.

D. Facing Material: Apply fabric facing fully covering visible surfaces of unit; with material stretched straight, on the grain, tight, square, and free from puckers, ripples, wrinkles, sags, blisters, seams, adhesive, or other visible distortions or foreign matter.

PART 3 - EXECUTION

3.1 EXAMINATION

A. Examine fabric, fabricated units, substrates, areas, and conditions for compliance with requirements, installation tolerances, and other conditions affecting unit performance.

B. Proceed with installation only after unsatisfactory conditions have been corrected.

3.2 INSTALLATION

A. Install units in locations indicated. Unless otherwise indicated, install units with vertical surfaces and edges plumb, top edges level and in alignment with other units, faces flush, and scribed to fit adjoining work accurately at borders and at penetrations.

B. Comply with manufacturer's written instructions for installation of units using type of mounting devices indicated. Mount units securely to supporting substrate.

C. Align fabric pattern and grain as indicated on Drawings.

3.3 CLEANING

A. Clip loose threads; remove pills and extraneous materials.

B. Clean panels on completion of installation to remove dust and other foreign materials according to manufacturer's written instructions.

END OF SECTION

SECTION 099123

PAINTS AND COATINGS

PART 1 - GENERAL

1.1 RELATED DOCUMENTS

A. Drawings and general provisions of the Contract, including General and Supplementary Conditions and Division 01 Specification Sections, apply to this Section.

1.2 SUMMARY

A. Section includes surface preparation and the application of paint systems on interior and exterior substrates.

B. Primers listed in Paint Schedule are in addition to shop applied primers specified in other Sections.

1.3 ACTION SUBMITTALS

A. Product Data: For each type of product. Include preparation requirements and application instructions.

B. Samples: For each type of paint system and in each color and gloss of topcoat.

C. Product List: For each product indicated, include the following:

1. Cross-reference to paint system and locations of application areas. Use same designations indicated on Drawings and in schedules.

D. Alternative paint manufacturers and products requested for approval. Show equal products by comparison with Basis of Design products.

1.4 MAINTENANCE MATERIAL SUBMITTALS

A. Furnish extra materials, from the same product run, that match products installed and that are packaged with protective covering for storage and identified with labels describing contents.

1. Paint: 5 percent, but not less than 1 gal. of each material and color applied.

B. Coating Maintenance Manual: Upon conclusion of the project, the Contractor or paint manufacturer/supplier shall furnish a coating maintenance manual, such as Sherwin-Williams “Custodian Project Color and Product Information” report or equal. Manual shall include an Area Summary with finish schedule, Area Detail designating where each product/color/finish was used, product data pages, Material Safety Data Sheets, care and cleaning instructions, touch-up procedures, and color samples of each color and finish used.

1.5 QUALITY ASSURANCE

A. Mockups: Apply mockups of each paint system indicated and each color and finish selected to verify preliminary selections made under Sample submittals and to demonstrate aesthetic effects and set quality standards for materials and execution.

1. Architect will select one surface to represent surfaces and conditions for application of each paint system specified in Part 3.

a. Vertical and Horizontal Surfaces: Provide samples of at least 100 sq. ft.
b. Other Items: Architect will designate items or areas required.

2. Final approval of color selections will be based on mockups.

a. If preliminary color selections are not approved, apply additional mockups of additional colors selected by Architect at no added cost to Owner.

1.6 DELIVERY, STORAGE, AND HANDLING

A. Store materials not in use in tightly covered containers in well-ventilated areas with ambient temperatures continuously maintained at not less than 45 deg F.

1. Maintain containers in clean condition, free of foreign materials and residue.
2. Remove rags and waste from storage areas daily.

1.7 FIELD CONDITIONS

A. Apply paints only when temperature of surfaces to be painted and ambient air temperatures are between 50 and 95 deg F.

B. Do not apply paints when relative humidity exceeds 85 percent; at temperatures less than 5 deg F above the dew point; or to damp or wet surfaces.

PART 2 - PRODUCTS

2.1 MANUFACTURERS

A. Refer to Section 090600 for colors.

B. Paint Manufacturers:

1. Basis-of-Design Product: Subject to compliance with requirements, provide products by Sherwin-Williams, or comparable product by one of the following:

a. Akzo Nobel Paints LLC; dba Glidden Professional.
b. Benjamin Moore & Company.
c. PPG Paints.
d. Coronado.

C. Stain Color: Refer to Section 090600 for color to match door stain sample.

2.2 PAINT, GENERAL

A. Material Compatibility:

1. Provide materials for use within each paint system that are compatible with one another and substrates indicated, under conditions of service and application as demonstrated by manufacturer, based on testing and field experience.
2. For each coat in a paint system, provide products recommended in writing by manufacturers of topcoat for use in paint system and on substrate indicated.

PART 3 - EXECUTION

3.1 EXAMINATION

A. Examine substrates and conditions, with Applicator present, for compliance with requirements for maximum moisture content and other conditions affecting performance of the Work.

B. Maximum Moisture Content of Substrates: When measured with an electronic moisture meter as follows:

1. Concrete: 12 percent.
2. Masonry (Clay and CMU): 12 percent.
3. Wood: 15 percent.
4. Gypsum Board: 12 percent.

C. Gypsum Board Substrates: Verify that finishing compound is sanded smooth.

D. Verify suitability of substrates, including surface conditions and compatibility with existing finishes and primers.

E. Proceed with coating application only after unsatisfactory conditions have been corrected.

1. Application of coating indicates acceptance of surfaces and conditions.

3.2 PREPARATION

A. Comply with manufacturer's written instructions and recommendations applicable to substrates indicated.

B. Remove hardware, covers, plates, and similar items already in place that are removable and are not to be painted. If removal is impractical or impossible because of size or weight of item, provide surface-applied protection before surface preparation and painting.

1. After completing painting operations, use workers skilled in the trades involved to reinstall items that were removed. Remove surface-applied protection if any.

C. Clean substrates of substances that could impair bond of paints, including dust, dirt, oil, grease, and incompatible paints and encapsulants.

3.3 APPLICATION

A. Apply paints according to manufacturer's written instructions and to recommendations.

B. Tint each undercoat a lighter shade to facilitate identification of each coat if multiple coats of same material are to be applied. Tint undercoats to match color of topcoat, but provide sufficient difference in shade of undercoats to distinguish each separate coat.

C. Apply paints to produce surface films without cloudiness, spotting, holidays, laps, brush marks, roller tracking, runs, sags, ropiness, or other surface imperfections. Cut in sharp lines and color breaks.

3.4 CLEANING AND PROTECTION

A. Protect work of other trades against damage from paint application. Correct damage to work of other trades by cleaning, repairing, replacing, and refinishing, as approved by Architect, and leave in an undamaged condition.

B. At completion of construction activities of other trades, touch up and restore damaged or defaced painted surfaces.

3.5 SCHEDULE - INTERIOR SURFACES

A. General: Unless noted otherwise, The Products by Sherwin Williams are basis-of-design and set standard of quality required. Gloss/sheen shall be confirmed by the Architect.

B. Wood – painted, semi-gloss finish:

1. Primer: ProMar 200 Zero Primer.
2. 1st coat: ProMar 200 Zero VOC.
3. 2nd coat: ProMar 200 Zero VOC.

C. Wood – stained, matte finish:

1. Stain: Minwax 250.
2. 2nd coat: Wood Classics WB Polyurethane A68.
3. 3rd coat: Wood Classics WB Polyurethane A68.

D. Masonry and Concrete – ceilings and soffits, flat finish:

1. Primer: Loxon Masonry Primer.
2. 1st coat: ProMar 200 Zero VOC.
3. 2nd coat: ProMar 200 Zero VOC.

E. Masonry and Concrete – eggshell finish:

1. Primer: Loxon Masonry Primer.
2. 1st coat: ProMar 200 Zero VOC.
3. 2nd coat: ProMar 200 Zero VOC.

F. CMU – eggshell finish:

1. Filler: PrepRite Block Filler.

2. 1st coat: ProMar 200 Zero VOC.
3. 2nd coat: ProMar 200 Zero VOC.

G. Gypsum – ceilings and soffits, flat finish:

1. Primer: ProMar 200 Zero Primer.
2. 1st coat: ProMar 200 Zero VOC.
3. 2nd coat: ProMar 200 Zero VOC.

H. Gypsum – walls, eggshell finish:

1. Primer: ProMar 200 Zero Primer.
2. 1st coat: ProMar 200 Zero VOC.
3. 2nd coat: ProMar 200 Zero VOC.

I. Gypsum – walls, semi-gloss finish:

1. Primer: ProMar 200 Zero Primer.
2. 1st coat: ProMar 200 Zero VOC.
3. 2nd coat: ProMar 200 Zero VOC.

J. Gypsum – light commercial, dry laboratories and rest rooms, pre-catalyzed EPOXY (eggshell finish or semi-gloss finish):

1. Primer: ProMar 200 Zero VOC Primer.
2. 1st coat: ProIndustrial Pre-Catalyzed Water-Based Epoxy.
3. 2nd coat: ProIndustrial Pre-Catalyzed Water-Based Epoxy.
   ** select finish – eggshell or semi-gloss

K. Ferrous Metal – handrails:

1. Two coats ProIndustrial High Performance Epoxy; semi-gloss.

L. Ferrous Metal – doors, frames and miscellaneous metals, semi-gloss finish:

1. Primer: ProIndustrial Pro-Cryl Universal Primer.
2. 1st coat: ProIndustrial 0 VOC Acrylic.
3. 2nd coat: ProIndustrial 0 VOC Acrylic.

M. Non-Ferrous Metal – doors, frames and miscellaneous metals, semi-gloss finish:

1. Primer: ProIndustrial Pro-Cryl Universal Primer.
2. 1st coat: ProIndustrial 0 VOC Acrylic.
3. 2nd coat: ProIndustrial 0 VOC Acrylic.

N. Concrete Floors – light duty (pigmented):

1. 1st coat: ArmorSeal Tread-Plex WB Acrylic Coating.
2. 2nd coat: ArmorSeal Tread-Plex WB Acrylic Coating.
   (colors – standard chart and most others)

O. Exposed Ceilings – flat or eggshell finish:

1. 2 coats: Low VOC Waterborne Acrylic Dryfall, Flat B42-W00081, 39g/l.
   Or

2. 2 coats: Low VOC Waterborne Acrylic Dryfall, Eggshell B42-W00082, 34g/l.

3.6 SCHEDULE - EXTERIOR SURFACES

A. General: Paint indicated is trade name and product code for Akzo Nobel Paints and shall serve as minimum standard quality, unless otherwise indicated. All manufacturers shall supply best quality grade materials.

B. Steel - Galvanized: Semi-Gloss.

1. Pretreatment – Devprep 88 heavy Duty Cleaner.

2. One coat Devflex 4020PF DTM Primer & Flat Finish.
3. Two coats Devflex 4216HP WB Acrylic Semi Gloss Enamel.

C. Ferrous Metal: Semi-Gloss.

1. One coat Devflex 4020PF DTM Primer & Flat Finish.
2. Two coats Devflex 4216HP WB Acrylic Semi Gloss Enamel.

D. Ferrous Metal: High Performance Coating for use at high abuse areas.

1. One coat Bar-Rust 231V Multi Purpose Epoxy Mastic.
2. Two coats Devthane 379H Aliphatic Urethane Gloss Enamel.

E. Non-Ferrous Metal: Semi-Gloss.

1. One coat Devflex 4020PF DTM Primer & Flat Finish.
2. Two coats Devflex 4216HP WB Acrylic Semi Gloss Enamel.

F. Cement, Acrylic Stucco: Flat.

1. Two coats 6201-XXXX Fortis 450 premium 100 percent acrylic flat exterior enamel.

G. Painted Wood: Semi-Gloss.

1. One coat Glidden Professional HYDROSEALER 6001-1200 WB Primer Sealer.
2. Two coats 6407-XXXX Fortis 450 premium 100 percent acrylic semi-gloss.

H. Painted Gypsum Soffit: Satin finish - 100% acrylic.

1. One coat Glidden Professional HYDROSEALER 6001-1200 WB Primer Sealer
2. Two coats 6403-XXXX Fortis 450 premium 100 percent acrylic satin exterior enamel

END OF SECTION

INSTRUCTIONAL BOARD SCHEDULE

ITEM NO.	MANUFAC. OR SUPPLIER	MANUF. NO.	TYPE	SIZE (W X H)	REMARKS
TB1	CLARIDGE	SERIES 4	TYPE "CO" TACK BOARD	3' X 4'	
TB2	CLARIDGE	SERIES 4	TYPE "CO" TACK BOARD	4' X 4'	
TB3	CLARIDGE	SERIES 4	TYPE "CO" TACK BOARD	6' X 4'	
TB4	CLARIDGE	SERIES 4	TYPE "CO" TACK BOARD	8' X 4'	
MB1	CLARIDGE	SERIES 4	TYPE "A" MARKER BOARD WITH MAP RAIL	3' X 4'	
MB2	CLARIDGE	SERIES 4	TYPE "A" MARKER BOARD WITH MAP RAIL	4' X 4'	
MB3	CLARIDGE	SERIES 4	TYPE "A" MARKER BOARD WITH MAP RAIL	6' X 4'	
MB4	CLARIDGE	SERIES 4	TYPE "A" MARKER BOARD WITH MAP RAIL	3' X 5'	NO CHALK TRAY
MB5	CLARIDGE	SERIES 4	TYPE "A" MARKER BOARD WITH MAP RAIL	4' X 5'	NO CHALK TRAY
MB6	CLARIDGE	SERIES 4	TYPE "A" MARKER BOARD WITH MAP RAIL	6' X 5'	NO CHALK TRAY
MB7	CLARIDGE	SERIES 4	TYPE "EL" WITH 3' WIDE X 4' HIGH TACK BOARD ON LEFT AND 6' WIDE X 5' HIGH MARKER BOARD ON RIGHT WITH MAP RAIL	9' X 4'/5'	LOCATE CHALK TRAY AT TACK BOARD IN LIEU OF MARKER BOARD
MB8	CLARIDGE	SERIES 4	TYPE "ER" WITH 3' WIDE X 4' HIGH TACK BOARD ON RIGHT AND 6' WIDE X 5' HIGH MARKER BOARD ON LEFT WITH MAP RAIL	9' X 4'/5'	LOCATE CHALK TRAY AT TACK BOARD IN LIEU OF MARKER BOARD
TS06	CLARIDGE	EDR	TWO EXHIBIT RAILS	2' X 3"	TWO RAILS AT EACH LOCATION, ONE MOUNTED AT 5'-4" A.F.F. TO TOP AND ONE MOUNTED AT 7'-0" A.F.F. TO TOP
TS08	CLARIDGE	EDR	TWO EXHIBIT RAILS	8' X 3"	
TS12	CLARIDGE	EDR	TWO EXHIBIT RAILS	12' X 3"	
TS16	CLARIDGE	EDR	TWO EXHIBIT RAILS	16' X 3"	
MW	CLARIDGE	---	MARKER WALL	VARIES	SEE DRAWINGS FOR SIZES
TW	---	---	TACK WALL	VARIES	SEE DRAWINGS FOR SIZES

SECTION 101100

VISUAL DISPLAY UNITS

PART 1 - GENERAL

1.1 RELATED DOCUMENTS

A. Drawings and general provisions of the Contract, including General and Supplementary Conditions and Division 01 Specification Sections, apply to this Section.

1.2 SUMMARY

A. Section Includes:

1. Visual display board assemblies.
2. Marker wall.

1.3 PREINSTALLATION MEETINGS

A. Preinstallation Conference: Conduct conference at Project site.

1.4 ACTION SUBMITTALS

A. Product Data: For each type of product.

1. Include construction details, material descriptions, dimensions of individual components and profiles, finishes, and accessories for visual display units.

B. Shop Drawings: For visual display units.

1. Include plans, elevations, sections, details, and attachment to other work.
2. Show locations of panel joints.
3. Show locations and layout of special-purpose graphics.
4. Include sections of typical trim members.

C. Samples for Verification: For each type of visual display unit indicated.

1. Visual Display Panel: Not less than 8-1/2 by 11 inches, with facing, core, and backing indicated for final Work. Include one panel for each type, color, and texture required.
2. Trim: 6-inch-long sections of each trim profile.
3. Accessories: Full-size Sample of each type of accessory.

D. Product Schedule: For visual display units. Use same designations indicated on Drawings.

1.5 INFORMATIONAL SUBMITTALS

A. Qualification Data: For qualified Installer.

B. Product Test Reports: Based on evaluation of comprehensive tests performed by a qualified testing agency, for surface-burning characteristics of tackboards.

C. Sample Warranties: For special warranties.

1.6 CLOSEOUT SUBMITTALS

A. Maintenance Data: For visual display units to include in maintenance manuals.

1.7 QUALITY ASSURANCE

A. Installer Qualifications: An entity that employs installers and supervisors who are trained and approved by manufacturer.

1.8 DELIVERY, STORAGE, AND HANDLING

A. Deliver factory-fabricated visual display units completely assembled in one piece. If dimensions exceed maximum manufactured unit size, or if unit size is impracticable to ship in one piece, provide two or more pieces with joints in locations indicated on approved Shop Drawings.

1.9 PROJECT CONDITIONS

A. Environmental Limitations: Do not deliver or install visual display units until spaces are enclosed and weathertight, wet-work in spaces is complete and dry, work above ceilings is complete, and temporary HVAC system is operating and maintaining ambient temperature and humidity conditions at occupancy levels during the remainder of the construction period.

1.10 WARRANTY

A. Special Warranty for Porcelain-Enamel Face Sheets: Manufacturer agrees to repair or replace porcelain-enamel face sheets that fail in materials or workmanship within specified warranty period.

1. Failures include, but are not limited to, the following:

a. Surfaces lose original writing and erasing qualities.
b. Surfaces exhibit crazing, cracking, or flaking.

2. Warranty Period: 50 years from date of Substantial Completion.

PART 2 - PRODUCTS

2.1 MANUFACTURERS

A. Source Limitations: Obtain each type of visual display unit from single source from single manufacturer.

2.2 PERFORMANCE REQUIREMENTS

A. Surface-Burning Characteristics: Comply with ASTM E 84; testing by a qualified testing agency. Identify products with appropriate markings of applicable testing agency.

1. Flame-Spread Index: 25 or less.
2. Smoke-Developed Index: 50 or less.

2.3 VISUAL DISPLAY BOARD ASSEMBLY

A. Basis of Design Product Subject to compliance with requirements, provide products by Claridge Products and Equipment, Inc., or comparable product by one of the following:

1. Marsh Industries.
2. Newline Products.

B. Visual Display Board Assembly: Factory fabricated.

1. Assembly: Markerboard and tackboard.
2. Corners: Square.
3. Width: As indicated on Drawings and in schedule.
4. Height: As indicated on Drawings and in schedule.
5. Mounting Method: Direct to wall.

C. Markerboard Panel: Porcelain-enamel-faced markerboard panel on core indicated.

1. Color: As selected by Architect from full range of industry colors.

D. Tackboard Panel: Vinyl-fabric-faced tackboard panel on core indicated.

1. Color and Pattern: Refer to Section 090600.

E. Aluminum Frames and Trim: Fabricated from not less than 0.062-inch-thick, extruded aluminum; standard size and shape.

1. Aluminum Finish: Clear anodic finish.

F. Joints: Make joints only where total length exceeds maximum manufactured length. Fabricate with minimum number of joints,

G. Combination Assemblies: Provide manufacturer's standard exposed trim between abutting sections of visual display panels.

H. Chalktray: Manufacturer's standard; continuous.

1. Box Type: Extruded aluminum with slanted front, grooved tray, and cast-aluminum end closures.

2.4 MARKER WALL

A. Basis of Design Product Subject to compliance with requirements, provide Claridge Products and Equipment, Inc., MW2.

B. Mounted LCS (Porcelain Enamel Steel Skin) panels mounted on 7/16-inch MDF with moisture barrier back and alum spline joint - No. 1016 perimeter trim and 16A adhesive.

2.5 DISPLAY RAILS

A. Aluminum Display Rail: Manufacturer's standard, extruded-aluminum display rail with tackable insert, and continuous paper holder, designed to hold accessories.

B. Size: As indicated on Drawings and in Spec Schedule.

C. End Stops: One at each end of map and display rails.

D. Accessories:

1. Metal Map Hooks: One for each 3 feet of map rail or fraction thereof.
2. Flag Holders: Include one flag holder per room.

2.6 MARKERBOARD PANELS

A. Porcelain-Enamel Markerboard Panels: Balanced, high-pressure, factory-laminated markerboard assembly of three-ply construction, consisting of moisture-barrier backing, core material, and porcelain-enamel face sheet with matte finish. Laminate panels under heat and pressure with manufacturer's standard, flexible waterproof adhesive.

1. Face Sheet Thickness: Manufacturer’s standard for product selected.
2. Manufacturer's Standard Core: Minimum 1/4-inch-thick, with manufacturer's standard moisture-barrier backing.
3. Laminating Adhesive: Manufacturer's standard moisture-resistant thermoplastic type.

2.7 TACKBOARD PANELS

A. Tackboard Panels:

1. Facing: Vinyl fabric.
2. Core: 1/16-inch cork over 3/8-inch board as selected.

B. Tack Strips:

1. Basis of Design Product: Claridge; EDR Exhibit Rail.
2. 3 inches wide with Fabricork tackable insert.
3. Mounts with 3/4-inch flat head screws (furnished) or with your double-sided tape.

2.8 MARKER WALLS

A. Marker Walls:

1. Facing: Porcelain on steel laminated on 7/16-inch MDF joined with steel splines.
2. Core: 1/16-inch cork over 3/8-inch board as selected.

2.9 MATERIALS

A. Porcelain-Enamel Face Sheet: PEI-1002, with face sheet manufacturer's standard two- or three-coat process.

B. Natural-Cork Sheet: Seamless, single-layer, compressed fine-grain cork sheet; bulletin board quality; face sanded for natural finish.

C. Vinyl Fabric: Mildew resistant, washable, complying with FS CCC-W-408D, Type II, weighing not less than 13 oz./sq. yd.; with surface-burning characteristics indicated.

D. Medium-Density Fiberboard: ANSI A208.2, Grade 130.

E. Extruded Aluminum: ASTM B 221, Alloy 6063.

F. Adhesives for Field Application: Mildew-resistant, nonstaining adhesive for use with specific type of panels, sheets, or assemblies; and for substrate application; as recommended in writing by visual display unit manufacturer.

2.10 GENERAL FINISH REQUIREMENTS

A. Comply with NAAMM's "Metal Finishes Manual for Architectural and Metal Products" for recommendations for applying and designating finishes.

B. Protect mechanical finishes on exposed surfaces from damage by applying a strippable, temporary protective covering before shipping.

C. Appearance of Finished Work: Noticeable variations in same piece are unacceptable. Variations in appearance of adjoining components are acceptable if they are within the range of approved Samples and are assembled or installed to minimize contrast.

2.11 ALUMINUM FINISHES

A. Clear Anodic Finish: AAMA 611, AA-M12C22A31, Class II, 0.010 mm or thicker.

PART 3 - EXECUTION

3.1 EXAMINATION

A. Examine substrates and conditions, with Installer present, for compliance with requirements for installation tolerances, surface conditions of wall, and other conditions affecting performance of the Work.

B. Examine roughing-in for electrical power systems to verify actual locations of connections before installation of motorized, sliding visual display units.

C. Examine walls and partitions for proper preparation and backing for visual display units.

D. Examine walls and partitions for suitable framing depth where sliding visual display units will be installed.

E. Proceed with installation only after unsatisfactory conditions have been corrected.

3.2 PREPARATION

A. Comply with manufacturer's written instructions for surface preparation.

B. Clean substrates of substances, such as dirt, mold, and mildew, that could impair the performance of and affect the smooth, finished surfaces of visual display boards.

C. Prepare surfaces to achieve a smooth, dry, clean surface free of flaking, unsound coatings, cracks, defects, projections, depressions, and substances that will impair bond between visual display units and wall surfaces.

D. Prime wall surfaces indicated to receive visual display units and as recommended in writing by visual display unit manufacturer.

E. Prepare recesses for sliding visual display units as required by type and size of unit.

3.3 INSTALLATION

A. General: Install visual display surfaces in locations and at mounting heights indicated on Drawings, or if not indicated, at heights indicated below. Keep perimeter lines straight, level, and plumb. Provide grounds, clips, backing materials, adhesives, brackets, anchors, trim, and accessories necessary for complete installation.

B. Field-Assembled Visual Display Board Assemblies: Coordinate field-assembled units with grounds, trim, and accessories indicated. Join parts with a neat, precision fit.

C. Adhered Factory-Fabricated Visual Display Board Assemblies: Adhere to wall surfaces with egg-size adhesive gobs at 16 inches o.c., horizontally and vertically.

D. Mechanically Attached Factory-Fabricated Visual Display Board Assemblies: Attach concealed clips, hangers, and grounds to wall surfaces and to visual display board assemblies with fasteners at not more than 16 inches o.c. Secure tops and bottoms of boards to walls.

3.4 CLEANING AND PROTECTION

A. Clean visual display units according to manufacturer's written instructions. Attach one removable cleaning instructions label to visual display unit in each room.

B. Touch up factory-applied finishes to restore damaged or soiled areas.

C. Cover and protect visual display units after installation and cleaning.

END OF SECTION

SECTION 101416

PLAQUES

PART 1 - GENERAL

1.1 RELATED DOCUMENTS

A. Drawings and general provisions of the Contract, including General and Supplementary Conditions and Division 01 Specification Sections, apply to this Section.

1.2 SUMMARY

A. Section includes cast bronze plaques.

1.3 ACTION SUBMITTALS

A. Product Data: For each type of product.

B. Shop Drawings: For plaques.

1. Include fabrication and installation details and attachments to other work.
2. Show plaque mounting heights, locations of supplementary supports to be provided by other installers, and accessories.
3. Show message list, typestyles, graphic elements, including raised characters and Braille, and layout for each plaque at least half size.

C. Samples for Initial Selection: For each type of plaque, exposed component, and exposed finish.

1. Include representative Samples of available typestyles and graphic symbols.

D. Product Schedule: For plaques. Use same designations indicated on Drawings or specified.

1.4 INFORMATIONAL SUBMITTALS

A. Qualification Data: For Installer and manufacturer.

B. Sample Warranty: For special warranty.

1.5 CLOSEOUT SUBMITTALS

A. Maintenance Data: For plaques to include in maintenance manuals.

1.6 QUALITY ASSURANCE

A. Installer Qualifications: Manufacturer of products.

1.7 WARRANTY

A. Special Warranty: Manufacturer agrees to repair or replace components of plaques that fail in materials or workmanship within specified warranty period.

1. Failures include, but are not limited to, the following:

a. Deterioration of finishes beyond normal weathering.
b. Deterioration of embedded graphic image.

2. Warranty Period: Five years from date of Substantial Completion.

PART 2 - PRODUCTS

2.1 PERFORMANCE REQUIREMENTS

A. Accessibility Standard: Comply with applicable provisions in the ABA standards of the Federal agency having jurisdiction and ICC A117.1.

2.2 PLAQUES

A. Cast Plaque: Cast-metal plaque with background texture, border, and characters having uniform faces, sharp corners, and precisely formed lines and profiles; and as follows:

1. Manufacturers: Subject to compliance with requirements, provide products by one of the following:

a. A.R.K. Ramos.
b. Matthews International Corporation; Bronze Division.
c. Metal Arts.
d. Metallic Arts.
e. Zimmerman Foundries.

2. Plaque Material: Cast bronze.
3. Plaque Thickness: 0.50 inch.
4. Finishes:

a. Integral Metal Finish: As selected by Architect from full range of industry finishes.
b. Baked-Enamel or Powder-Coat Finish: Manufacturer's standard, in color as selected by Architect from manufacturer's full range.
c. Overcoat: Manufacturer's standard baked-on clear coating.

5. Background Texture: As selected by Architect from manufacturer's full range.
6. Integrally Cast Border Style: Square single line, polished.
7. Applied Frame Material, Style, and Finish: As indicated on Drawings.
8. Mounting: Rosette-head through fasteners.
9. Text and Typeface: Schoolbook Bold.

2.3 MATERIALS

A. Bronze Castings: ASTM B 584, alloy recommended by manufacturer and finisher for finish indicated.

B. Bronze Plate: ASTM B 36/B 36M, alloy recommended by manufacturer and finisher for finish indicated.

2.4 ACCESSORIES

A. Fasteners and Anchors: Manufacturer's standard as required for secure anchorage of plaques, noncorrosive and compatible with each material joined, and complying with the following:

1. Use concealed fasteners and anchors unless indicated to be exposed.
2. Exposed Metal-Fastener Components, General:

    a. Fabricated from same basic metal and finish of fastened metal unless otherwise indicated.
    b. Fastener Heads: For nonstructural connections, use flathead or oval countersunk screws and bolts with tamper-resistant allen-head, spanner-head or one-way-head slots unless otherwise indicated.

3. Plaque Mounting Fasteners:

    a. Concealed Studs: Concealed (blind), threaded studs welded or brazed to back of plaque, screwed into back of plaque, or screwed into tapped lugs cast integrally into back of plaque unless otherwise indicated.
    b. Through Fasteners: Exposed metal fasteners matching plaque finish, with type of head indicated, installed in predrilled holes.

B. Adhesive: As recommended by plaque manufacturer.

C. Bituminous Paint: Cold-applied asphalt emulsion complying with ASTM D 1187/D 1187M.

2.5 FABRICATION

A. General: Provide manufacturer's standard plaques according to requirements indicated.

1. Preassemble plaques in the shop to greatest extent possible. Disassemble plaques only as necessary for shipping and handling limitations. Clearly mark units for reassembly and installation; apply markings in locations concealed from view after final assembly.
2. Mill joints to a tight, hairline fit. Form assemblies and joints exposed to weather to resist water penetration and retention.
3. Comply with AWS for recommended practices in welding and brazing. Provide welds and brazes behind finished surfaces without distorting or discoloring exposed side. Clean exposed welded and brazed connections of flux, and dress exposed and contact surfaces.
4. Conceal connections if possible; otherwise, locate connections where they are inconspicuous.
5. Provide rabbets, lugs, and tabs necessary to assemble components and to attach to existing work. Drill and tap for required fasteners. Use concealed fasteners where possible; use exposed fasteners that match plaque finish.

6. Castings: Fabricate castings free of warp, cracks, blowholes, pits, scale, sand holes, and other defects that impair appearance or strength. Grind, wire brush, sandblast, and buff castings to remove seams, gate marks, casting flash, and other casting marks before finishing.

B. Brackets: Fabricate brackets, fittings, and hardware for bracket-mounted plaques to suit plaque construction and mounting conditions indicated. Modify manufacturer's standard brackets as required.

1. Aluminum Brackets: Factory finish brackets with baked-enamel or powder-coat finish to match Architect's sample color unless otherwise indicated.

2.6 GENERAL FINISH REQUIREMENTS

A. Protect mechanical finishes on exposed surfaces from damage by applying a strippable, temporary protective covering before shipping.

B. Appearance of Finished Work: Noticeable variations in same piece are not acceptable. Variations in appearance of adjoining components are acceptable if they are within the range of approved Samples and are assembled or installed to minimize contrast.

C. Directional Finishes: Run grain with long dimension of each piece and perpendicular to long dimension of finished trim or border surface unless otherwise indicated.

D. Organic, Anodic, and Chemically Produced Finishes: Apply to formed metal after fabrication but before applying contrasting polished finishes on raised features unless otherwise indicated.

2.7 CLEAR ORGANIC COATING FOR COPPER-ALLOY FINISHES

A. Clear Organic Coating: Clear, waterborne, air-drying, acrylic lacquer called "Incralac"; specially developed for coating copper-alloy products; consisting of a solution of methyl methacrylate copolymer with benzotriazole to prevent breakdown of the film in UV light; shop applied in two uniform coats according to manufacturer's written instructions, with interim drying between coats and without runs or other surface imperfections, to a total dry film thickness of 1 mil.

PART 3 - EXECUTION

3.1 EXAMINATION

A. Examine substrates, areas, and conditions, with Installer present, for compliance with requirements for installation tolerances and other conditions affecting performance.

B. Verify that plaque-support surfaces are within tolerances to accommodate plaques without gaps or irregularities between backs of plaques and support surfaces unless otherwise indicated.

C. Proceed with installation only after unsatisfactory conditions have been corrected.

3.2 INSTALLATION

A. General: Install plaques using mounting methods indicated and according to manufacturer's written instructions.

1. Install plaques level, plumb, true to line, and at locations and heights indicated, with plaque surfaces free of distortion and other defects in appearance.
2. Install plaques so they do not protrude or obstruct according to the accessibility standard.
3. Before installation, verify that plaque surfaces are clean and free of materials or debris that would impair installation.
4. Corrosion Protection: Coat concealed surfaces of exterior aluminum in contact with grout, concrete, masonry, wood, or dissimilar metals, with a heavy coat of bituminous paint.

B. Mounting Methods:

1. Concealed Studs: Using a template, drill holes in substrate aligning with studs on back of plaque. Remove loose debris from hole and substrate surface.

   a. Masonry Substrates: Fill holes with adhesive. Leave recess space in hole for displaced adhesive. Place plaque in position and push until flush to surface, embedding studs in holes. Temporarily support plaque in position until adhesive fully sets.
   b. Thin or Hollow Surfaces: Place plaque in position and flush to surface, install washers and nuts on studs projecting through opposite side of surface, and tighten.

2. Through Fasteners: Drill holes in substrate using predrilled holes in plaque as template. Countersink holes in plaque if required. Place plaque in position and flush to surface. Install through fasteners and tighten.
3. Brackets: Remove loose debris from substrate surface and install bracket supports in position, so that plaque is correctly located and aligned.
4. Adhesive: Clean bond-breaking materials from substrate surface and remove loose debris. Apply linear beads or spots of adhesive symmetrically to back of plaque and of suitable quantity to support weight of plaque after cure without slippage. Keep adhesive away from edges to prevent adhesive extrusion as plaque is applied and to prevent visibility of cured adhesive at plaque edges. Place plaque in position, and push to engage adhesive. Temporarily support plaque in position until adhesive fully sets.
5. Shim-Plate Mounting: Provide 1/8-inch-thick, concealed aluminum shim plates with predrilled and countersunk holes, at locations indicated, and where other direct mounting methods are impractical. Attach plate with fasteners and anchors suitable for secure attachment to substrate. Attach plaques to plate using.

3.3 ADJUSTING AND CLEANING

A. Remove and replace damaged or deformed plaques and plaques that do not comply with specified requirements. Replace plaques with damaged or deteriorated finishes or components that cannot be successfully repaired by finish touchup or similar minor repair procedures.

B. Remove temporary protective coverings and strippable films as plaques are installed.

C. On completion of installation, clean exposed surfaces of plaques according to manufacturer's written instructions, and touch up minor nicks and abrasions in finish. Maintain plaques in a clean condition during construction and protect from damage until acceptance by Owner.

END OF SECTION

SECTION 101419

DIMENSIONAL LETTER SIGNAGE

PART 1 - GENERAL

1.1 RELATED DOCUMENTS

A. Drawings and general provisions of the Contract, including General and Supplementary Conditions and Division 01 Specification Sections, apply to this Section.

1.2 SUMMARY

A. Section Includes:

1. Cast dimensional characters.

1.3 ACTION SUBMITTALS

A. Product Data: For each type of product.

B. Shop Drawings: For dimensional letter signs.

1. Include fabrication and installation details and attachments to other work.
2. Show sign mounting heights, locations of supplementary supports to be provided by others, and accessories.
3. Show message list, typestyles, graphic elements, and layout for each sign at least half size.
4. Show locations of electrical service connections.
5. Include diagrams for power, signal, and control wiring.

C. Samples for Initial Selection: For each type of sign assembly, exposed component, and exposed finish.

1. Include representative Samples of available typestyles, colors, and graphic symbols.

D. Sign Schedule: Use same designations specified or indicated on Drawings or in a sign schedule.

1.4 INFORMATIONAL SUBMITTALS

A. Qualification Data: For Installer and manufacturer.

B. Sample Warranty: For special warranty.

1.5 CLOSEOUT SUBMITTALS

A. Maintenance Data: For signs to include in maintenance manuals.

1.6 QUALITY ASSURANCE

A. Installer Qualifications: An entity that employs installers and supervisors who are trained and approved by manufacturer.

1.7 FIELD CONDITIONS

A. Field Measurements: Verify locations of electrical service embedded in permanent construction by other installers by field measurements before fabrication, and indicate measurements on Shop Drawings.

1.8 WARRANTY

A. Special Warranty: Manufacturer agrees to repair or replace components of signs that fail in materials or workmanship within specified warranty period.

1. Failures include, but are not limited to, the following:

a. Deterioration of finishes beyond normal weathering.

2. Warranty Period: Five years from date of Substantial Completion.

PART 2 - PRODUCTS

2.1 PERFORMANCE REQUIREMENTS

A. Structural Performance: Signs and supporting elements shall withstand the effects of gravity and other loads within limits and under conditions indicated.

1. Uniform Wind Load: As indicated on Drawings.
2. Other Design Load: As indicated on Drawings
3. Uniform and concentrated loads need not be assumed to act concurrently.

B. Thermal Movements: For exterior fabricated channel dimensional characters, allow for thermal movements from ambient and surface temperature changes.

1. Temperature Change: 120 deg F, ambient; 180 deg F, material surfaces.

2.2 DIMENSIONAL CHARACTERS

A. Cast Characters: Characters with uniform faces, sharp corners, and precisely formed lines and profiles.

1. Manufacturers: Subject to compliance with requirements, available manufacturers offering products that may be incorporated into the Work include, but are not limited to, the following:

a. A.R.K. Ramos.
b. ASI Sign Systems, Inc.
c. Gemini Incorporated.

d. Metallic Arts.
e. Superior Sign.

2. Character Material: Cast aluminum.
3. Material Thickness: Manufacturer's standard for size and design of character.
4. Character Height: 12 inches.
5. Character Depth: Minimum 3 inches.
6. Finishes: As selected by Architect from full range of industry finishes.
7. Mounting: Projecting mount with collars and threaded studs.

a. Hold characters at 2-inch distance from wall surface.

8. Typeface: As selected by Architect.

2.3 DIMENSIONAL CHARACTER MATERIALS

A. Aluminum Castings: ASTM B 26/B 26M, alloy and temper recommended by sign manufacturer for casting process used and for type of use and finish indicated.

2.4 ACCESSORIES

A. Fasteners and Anchors: Manufacturer's standard as required for secure anchorage of signage, noncorrosive and compatible with each material joined, and complying with the following:

1. Use concealed fasteners and anchors unless indicated to be exposed.
2. For exterior exposure, furnish stainless-steel devices unless otherwise indicated.
3. Sign Mounting Fasteners:

a. Projecting Studs: Threaded studs with sleeve spacer, welded or brazed to back of sign material, screwed into back of sign assembly, or screwed into tapped lugs cast integrally into back of cast sign material, unless otherwise indicated. Studs minimum.
b. Two inches longer than projection for installation as indicated.

2.5 FABRICATION

A. General: Provide manufacturer's standard sign assemblies according to requirements indicated.

1. Preassemble signs and assemblies in the shop to greatest extent possible. Disassemble signs and assemblies only as necessary for shipping and handling limitations. Clearly mark units for reassembly and installation; apply markings in locations concealed from view after final assembly.
2. Mill joints to a tight, hairline fit. Form assemblies and joints exposed to weather to resist water penetration and retention.
3. Comply with AWS for recommended practices in welding and brazing. Provide welds and brazes behind finished surfaces without distorting or discoloring exposed side. Clean exposed welded and brazed connections of flux, and dress exposed and contact surfaces.
4. Conceal connections if possible; otherwise, locate connections where they are inconspicuous.
5. Internally brace signs for stability and for securing fasteners.

6. Provide rabbets, lugs, and brackets necessary to assemble components and to attach to existing work. Drill and tap for required fasteners. Use concealed fasteners where possible; use exposed fasteners that match sign finish.
7. Castings: Fabricate castings free of warp, cracks, blowholes, pits, scale, sand holes, and other defects that impair appearance or strength. Grind, wire brush, sandblast, and buff castings to remove seams, gate marks, casting flash, and other casting marks before finishing.

B. Brackets: Fabricate brackets, fittings, and hardware for bracket-mounted signs to suit sign construction and mounting conditions indicated. Modify manufacturer's standard brackets as required.

2.6 GENERAL FINISH REQUIREMENTS

A. Protect mechanical finishes on exposed surfaces from damage by applying a strippable, temporary protective covering before shipping.

B. Appearance of Finished Work: Noticeable variations in same piece are not acceptable. Variations in appearance of adjoining components are acceptable if they are within the range of approved Samples and are assembled or installed to minimize contrast.

C. Directional Finishes: Run grain with long dimension of each piece and perpendicular to long dimension of finished trim or border surface unless otherwise indicated.

D. Organic, Anodic, and Chemically Produced Finishes: Apply to formed metal after fabrication but before applying contrasting polished finishes on raised features unless otherwise indicated.

2.7 ALUMINUM FINISHES

A. Finish as selected by Architect.

PART 3 - EXECUTION

3.1 EXAMINATION

A. Examine substrates, areas, and conditions, with Installer present, for compliance with requirements for installation tolerances and other conditions affecting performance of signage work.

B. Verify that sign-support surfaces are within tolerances to accommodate signs without gaps or irregularities between backs of signs and support surfaces unless otherwise indicated.

C. Verify that electrical service is correctly sized and located to accommodate signs.

D. Proceed with installation only after unsatisfactory conditions have been corrected.

3.2 INSTALLATION

A. General: Install signs using mounting methods indicated and according to manufacturer's written instructions.

1. Install signs level, plumb, true to line, and at locations and heights indicated, with sign surfaces free of distortion and other defects in appearance.
2. Before installation, verify that sign surfaces are clean and free of materials or debris that would impair installation.
3. Corrosion Protection: Coat concealed surfaces of exterior aluminum in contact with grout, concrete, masonry, wood, or dissimilar metals, with a heavy coat of bituminous paint.

B. Mounting Methods:

1. Projecting Studs: Using a template, drill holes in substrate aligning with studs on back of sign. Remove loose debris from hole and substrate surface.

   a. Masonry Substrates: Fill holes with adhesive. Leave recess space in hole for displaced adhesive. Place spacers on studs, place sign in position, and push until spacers are pinched between sign and substrate, embedding the stud ends in holes. Temporarily support sign in position until adhesive fully sets.

3.3 ADJUSTING AND CLEANING

A. Remove and replace damaged or deformed characters and signs that do not comply with specified requirements. Replace characters with damaged or deteriorated finishes or components that cannot be successfully repaired by finish touchup or similar minor repair procedures.

B. Remove temporary protective coverings and strippable films as signs are installed.

C. On completion of installation, clean exposed surfaces of signs according to manufacturer's written instructions, and touch up minor nicks and abrasions in finish. Maintain signs in a clean condition during construction and protect from damage until acceptance by Owner.

END OF SECTION

SECTION 101423

PANEL SIGNAGE

PART 1 - GENERAL

1.1 RELATED DOCUMENTS

A. Drawings and general provisions of the Contract, including General and Supplementary Conditions and Division 01 Specification Sections, apply to this Section.

1.2 SUMMARY

A. Section Includes:

1. Interior room signs identifying each permanent room or space.
2. Interior informational signs.

1.3 DEFINITIONS

A. Accessible: In accordance with the accessibility standard.

1.4 ACTION SUBMITTALS

A. Product Data: For each type of product.

B. Shop Drawings: Show fabrication and installation details for signs.

1. Include fabrication and installation details and attachments to other work.
2. Show sign mounting heights, locations of supplementary supports to be provided by other installers, and accessories.
3. Show message list, typestyles, graphic elements, including raised characters and Braille, and layout for each sign at least half size.

C. Sample Room Signs: Submit two full size samples of room signs illustrating type, style and color specified including method of attachment.

D. Samples for Other Signs: Submit two 12 x 12-inch size samples of each type face sheet illustrating style, texture, color, graphic image, message, cutouts and translucent lens attachment.

E. Samples Sign Frames and Trim: Submit two 12-inch-long samples of each type extruded frame and trim illustrating finish, texture, and color.

F. Sign Schedule: Use same designations indicated on Drawings.

1.5 INFORMATIONAL SUBMITTALS

A. Qualification Data: For Installer and manufacturer.

B. Sample Warranty: For special warranty.

1.6 CLOSEOUT SUBMITTALS

A. Maintenance Data: For signs to include in maintenance manuals.

1.7 QUALITY ASSURANCE

A. Installer Qualifications: An entity that employs installers and supervisors who are trained and approved by manufacturer.

1.8 FIELD CONDITIONS

A. Field Measurements: Verify locations of anchorage devices embedded in permanent construction by other installers by field measurements before fabrication and indicate measurements on Shop Drawings.

1.9 WARRANTY

A. Special Warranty: Manufacturer agrees to repair or replace components of signs that fail in materials or workmanship within specified warranty period.

1. Failures include, but are not limited to, the following:

a. Deterioration of finishes beyond normal weathering.
b. Deterioration of embedded graphic image colors.
c. Separation or delamination of sheet materials and components.

2. Warranty Period: Five years from date of Substantial Completion.

PART 2 - PRODUCTS

2.1 PERFORMANCE REQUIREMENTS

A. Accessibility Standard: Comply with applicable provisions in the USDOJ's "2010 ADA Standards for Accessible Design" and ICC A117.1.

2.2 INTERIOR ROOM SIGNS

A. Manufacturers: Subject to compliance with requirements, available manufacturers offering products that may be incorporated into the Work include, but are not limited to, the following:

1. Ace Sign Systems, Inc.
2. Advance Corporation; Braille-Tac Division.
3. ASI Sign Systems, Inc.
4. InPro Corporation; SignScape Signage and Wayfinding.

5. Mohawk Sign Systems.

B. Refer to Drawings for areas requiring signage.

C. Signs: Plastic, photo-etched to produce raised text and braille; 8 x 8 inch, 1/2-inch radius corners; 1-inch high slip-in.

D. Lettering: Color and position as selected; Helvetica style, characters raised 1/32 inch.

1. Room numbers and room names 5/8-inch-high upper-case text, 1-inch high numerals.
2. Room occupant names 1/2-inch-high upper and lower case.

E. Backplate Color: Custom color to match paint sample provided by Architect. Use backing plate of matching color where mounted on glass.

F. Braille: Provide Grade 2 Braille translation of printed text.

G. Pictograms: Provide pictograms for toilet rooms and stair entry doors.

H. Provide room numbers and room names at each entrance to each room as shown on the Drawings if not indicated on Drawings as directed by Architect.

I. Mechanical Fasteners: As recommended by manufacturer. Adhesive may be used where signs are attached to glass.

2.3 INTERIOR INFORMATIONAL SIGNS

A. Manufacturers: Subject to compliance with requirements, available manufacturers offering products that may be incorporated into the Work include, but are not limited to, the following:

1. Ace Sign Systems, Inc.
2. Advance Corporation; Braille-Tac Division.
3. ASI Sign Systems, Inc.
4. InPro Corporation; SignScape Signage and Wayfinding.
5. Mohawk Sign Systems.

B. Refer to Drawings for areas requiring signage.

C. Signs: Plastic subsurface printed on 1/16-inch-thick clear matte acrylic and laminated to 1/8-inch-thick acrylic backplate; size required for message, 1/2-inch radius corners.

D. Lettering: Helvetica style, minimum 5/8-inch-high upper-case text. Color and position as selected.

E. Backplate Color: Custom color to match paint sample provided by Architect. Use backing plate of matching color where mounted on glass.

F. Mechanical Fasteners: As recommended by manufacturer. Adhesive may be used where signs are attached to glass.

PART 3 - EXECUTION

3.1 EXAMINATION

A. Examine substrates, areas, and conditions, with Installer present, for compliance with requirements for installation tolerances and other conditions affecting performance of work.

B. Verify that items, including anchor inserts are sized and located to accommodate signs.

C. Proceed with installation only after unsatisfactory conditions have been corrected.

3.2 INSTALLATION

A. Locate signs and accessories where indicated, using mounting methods of types described and complying with manufacturer's written instructions.

1. Install signs level, plumb, and at heights indicated, with sign surfaces free of distortion and other defects in appearance.
2. Interior Wall Signs: Install signs on walls adjacent to latch side of door where applicable. Where not indicated or possible, such as double doors, install signs on nearest adjacent walls. Locate to allow approach within 3 inches of sign without encountering protruding objects or standing within swing of door.
3. Install signs after interior surfaces are finished.
4. Locate signs as indicated on Drawings and in accordance with accessibility requirements.

B. Clean and polish signs when installation is completed.

3.3 INSTALLATION - ROOM AND INFORMATIONAL SIGNS

A. Mount room signs with mechanical fasteners as recommended by manufacturer, unless otherwise directed by Architect.

B. Locate room identification signs on wall surfaces adjacent to strike side of door, level, 5 feet above finished floor to center line of sign and 3 inches from door jamb trim.

C. Locate informational signs on wall surfaces, level, 5 feet above finished floor to center line of sign at location scheduled.

D. Wall-Mounted Signs: Comply with sign manufacturer's written instructions except where more stringent requirements apply.

3.4 SCHEDULE – INTERIOR SIGNAGE

A. Sign Type A:

1. Description: Acrylic sign and backplate with tactile graphics and Braille.
2. Size: 9" high x 6" wide or 6" high x 9" wide.
3. Quantity: 55.
4. Locations: Room (name and number), restrooms, stair, specialty rooms.

B. Sign Type B:

1. Description: Acrylic sign and backplate with tactile graphics and Braille, with 3" high x 9" wide window for printed paper insert.

2. Size: 6" high x 9" wide.
3. Quantity: 60.
4. Locations: Classrooms, Office and Staff signs.

C. Sign Type C:

1. Description: Acrylic sign and backplate with tactile graphics and Braille.
2. Size: 6" high x 6" wide.
3. Quantity: 32.
4. Locations: Secondary rooms (storage, mechanical, janitor, etc.)

D. Sign Type D:

1. Description: Acrylic sign and backplate with tactile graphics and Braille.
2. Size: 8" high x 24" wide.
3. Quantity: 6.
4. Locations: Corridors (directional signage).

E. Sign Type E: Area of Rescue Signs.

1. Description: Acrylic sign and backplate with tactile graphics and Braille.
2. Size: 9" high x 9" wide.
3. Quantity: 4.
4. Locations: Provide one area-of-rescue Sign mounted on corridor wall adjacent to each entrance to stairwell containing area of rescue.

F. Sign Type F: Occupancy Capacity Signs.

1. Description: Acrylic sign and backplate with tactile graphics and Braille.
2. Size: 3" high x 9" wide.
3. Quantity: 3:
4. Locations: Provide one occupancy capacity sign at mounted at the main entrance to each assembly space below the room name and number. Verify location with the Architect.

G. Sign Type G: Tactile Exit Signs.

1. Description: Acrylic sign and backplate with tactile graphics and braille, one standard background and contrasting copy color stating “EXIT”:
2. Size: 9" high x 9" wide.
3. Quantity: 32.
4. Locations: Provide one area of tactile exit sign mounted on the wall adjacent to each door to an egress, stairwell, exit passage, and exit discharge. In general, all exterior doors and all doors with illuminated signs shall have Type G Tactile Exit Signs adjacent to the doors as required by the International Building Code.

3.5 CLEANING AND PROTECTION

A. After installation, clean soiled sign surfaces according to manufacturer's written instructions. Protect signs from damage until acceptance by Owner.

END OF SECTION

SECTION 102113

PLASTIC TOILET COMPARTMENTS

PART 1 - GENERAL

1.1 RELATED DOCUMENTS

A. Drawings and general provisions of the Contract, including General and Supplementary Conditions and Division 01 Specification Sections, apply to this Section.

1.2 SUMMARY

A. Section Includes:

1. Solid-plastic toilet compartments configured as toilet enclosures and urinal screens.

1.3 ACTION SUBMITTALS

A. Product Data: For each type of product.

1. Include construction details, material descriptions, dimensions of individual components and profiles, and finishes for toilet compartments.

B. Shop Drawings: For toilet compartments.

1. Include plans, elevations, sections, details, and attachment details.
2. Show locations of cutouts for compartment-mounted toilet accessories.
3. Show locations of centerlines of toilet fixtures.
4. Show locations of floor drains.

C. Samples for Initial Selection: For each type of toilet compartment material indicated.

1. Include Samples of hardware and accessories involving material and color selection.

D. Samples for Verification: For the following products, in manufacturer's standard sizes unless otherwise indicated:

1. Each type of material, color, and finish required for toilet compartments, prepared on 6-inch-square Samples of same thickness and material indicated for Work.

E. Product Schedule: For toilet compartments, prepared by or under the supervision of supplier, detailing location and selected colors for toilet compartment material.

1.4 INFORMATIONAL SUBMITTALS

A. Product Certificates: For each type of toilet compartment.

1.5 CLOSEOUT SUBMITTALS

A. Maintenance Data: For toilet compartments to include in maintenance manuals.

1.6 MAINTENANCE MATERIAL SUBMITTALS

A. Furnish extra materials that match products installed and that are packaged with protective covering for storage and identified with labels describing contents and source.

1. Door Hinges: One hinge with associated fasteners.
2. Latch and Keeper: One latch and keeper with associated fasteners.
3. Door Bumper: One bumper with associated fasteners.
4. Door Pull: One door pull with associated fasteners.
5. Fasteners: Ten fasteners of each size and type.

1.7 PROJECT CONDITIONS

A. Field Measurements: Verify actual locations of toilet fixtures, walls, columns, ceilings, and other construction contiguous with toilet compartments and urinal screens by field measurements before fabrication.

PART 2 - PRODUCTS

2.1 PERFORMANCE REQUIREMENTS

A. Surface-Burning Characteristics: Comply with ASTM E 84; testing by a qualified testing agency. Identify products with appropriate markings of applicable testing agency.

1. Flame-Spread Index: 75 or less.
2. Smoke-Developed Index: 450 or less.

B. Fire hazard classification: Pass NFPA 286.

C. Regulatory Requirements: Comply with applicable provisions in the U.S. Architectural & Transportation Barriers Compliance Board's ADA-ABA Accessibility Guidelines for Buildings and Facilities and ICC A117.1 for toilet compartments designated as accessible.

2.2 SOLID-PLASTIC TOILET COMPARTMENTS

A. Basis of Design Product: Subject to compliance with requirements, provide Scranton Products, or comparable product by one of the following:

1. Bradley Corporation; Mills Partitions.
2. Global Partitions.

B. Toilet-Enclosure Style: Floor anchored, Overhead braced.

C. Urinal-Screen Style: Floor anchored.

D. Door, Panel, and Pilaster Construction: Solid, high-density polyethylene (HDPE) panel material, not less than 1 inch thick, seamless, with eased edges, and with homogenous color and pattern throughout thickness of material.

1. Heat-Sink Strip: Manufacturer's standard continuous, extruded-aluminum or stainless-steel strip fastened to exposed bottom edges of solid-plastic components to hinder malicious combustion.
2. Color and Pattern: Refer to Section 090600.

E. Pilaster Shoes: Manufacturer's standard design; stainless steel, anchored to finish floor.

F. Brackets (Fittings):

1. Stirrup Type: Ear or U-brackets, stainless steel.

2.3 HARDWARE AND ACCESSORIES

A. Hardware and Accessories: Manufacturer's heavy-duty operating hardware and accessories.

1. Hinges: Manufacturer's Stainless Steel, full height (continuous), self-closing type that can be adjusted to hold doors open at any angle up to 90 degrees with Spring Hinge.
2. Latch and Keeper: Manufacturer's heavy-duty surface-mounted heavy aluminum extrusion (6463-T5 Alloy) latch unit designed to resist damage due to slamming, with combination rubber-faced door strike and keeper, and with provision for emergency access. Provide units that comply with regulatory requirements for accessibility at compartments designated as accessible. Mount with through-bolts.
3. Coat Hook: Manufacturer's heavy-duty combination cast-stainless-steel hook and rubber-tipped bumper, sized to prevent in-swinging door from hitting compartment-mounted accessories. Mount with through-bolts.
4. Door Bumper: Manufacturer's heavy-duty rubber-tipped cast-stainless-steel bumper at out-swinging doors. Mount with through-bolts.
5. Door Pull: Manufacturer's heavy-duty cast-stainless-steel pull at out-swinging doors that complies with regulatory requirements for accessibility. Provide units on both sides of doors at compartments designated as accessible. Mount with through-bolts.

B. Overhead Bracing: Manufacturer's standard continuous, extruded-aluminum head rail with antigrip profile and in manufacturer's standard finish.

C. Anchorages and Fasteners: Manufacturer's standard exposed fasteners of stainless steel, finished to match the items they are securing, with theft-resistant-type heads. Provide sex-type bolts for through-bolt applications. For concealed anchors, use stainless-steel, hot-dip galvanized-steel, or other rust-resistant, protective-coated steel compatible with related materials.

2.4 MATERIALS

A. Aluminum Extrusions: ASTM B 221.

B. Stainless-Steel Sheet: ASTM A 666, Type 304, stretcher-leveled standard of flatness.

C. Stainless-Steel Castings: ASTM A 743/A 743M.

2.5 FABRICATION

A. Fabrication, General: Fabricate toilet compartment components to sizes indicated. Coordinate requirements and provide cutouts for through-partition toilet accessories where required for attachment of toilet accessories.

B. Overhead-Braced Units: Provide manufacturer's standard corrosion-resistant supports, leveling mechanism, and anchors at pilasters to suit floor conditions. Provide shoes at pilasters to conceal supports and leveling mechanism.

C. Door Size and Swings: Unless otherwise indicated, provide 24-inch-wide, in-swinging doors for standard toilet compartments and 36-inch-wide, out-swinging doors with a minimum 32-inch-wide, clear opening for compartments designated as accessible.

D. Urinal Screen Sizes: Provide panels with a minimum width of 20 inches.

E. Dividing panels shall be 55 inches high and mounted 14 inches above finish floor.

F. Doors shall be 55 inches high and mounted 14 inches above finish floor.

G. Pilasters shall be 82 inches high and fastened to stainless steel shoes with theft-proof sex bolts

PART 3 - EXECUTION

3.1 EXAMINATION

A. Examine areas and conditions, with Installer present, for compliance with requirements for fastening, support, alignment, operating clearances, and other conditions affecting performance of the Work.

1. Confirm location and adequacy of blocking and supports required for installation.

B. Proceed with installation only after unsatisfactory conditions have been corrected.

3.2 INSTALLATION

A. General: Comply with manufacturer's written installation instructions. Install units rigid, straight, level, and plumb. Secure units in position with manufacturer's recommended anchoring devices.

1. Maximum Clearances:

a. Pilasters and Panels: 1/2 inch.
b. Panels and Walls: 1 inch.

2. Stirrup Brackets: Secure panels to walls and to pilasters with no fewer than two brackets attached near top and bottom of panel.

a. Locate wall brackets so holes for wall anchors occur in masonry or tile joints.
b. Align brackets at pilasters with brackets at walls.

B. Overhead-Braced Units: Secure pilasters to floor and level, plumb, and tighten. Set pilasters with anchors penetrating not less than 1-3/4 inches into structural floor unless otherwise

indicated in manufacturer's written instructions. Secure continuous head rail to each pilaster with no fewer than two fasteners. Hang doors to align tops of doors with tops of panels, and adjust so tops of doors are parallel with overhead brace when doors are in closed position.

C. Urinal Screens: Attach with anchoring devices to suit supporting structure. Set units level and plumb, rigid, and secured to resist lateral impact.

3.3 ADJUSTING

A. Hardware Adjustment: Adjust and lubricate hardware according to hardware manufacturer's written instructions for proper operation. Set hinges on in-swinging doors to hold doors open approximately 30 degrees from closed position when unlatched. Set hinges on out-swinging doors to return doors to fully closed position.

END OF SECTION

SECTION 102123

CUBICLE CURTAINS AND TRACK

PART 1 - GENERAL

1.1 RELATED DOCUMENTS

A. Drawings and general provisions of the Contract, including General and Supplementary Conditions and Division 01 Specification Sections, apply to this Section.

1.2 SUMMARY

A. Section Includes:

1. Cubicle-curtain tracks and carriers.
2. Cubicle curtains.

1.3 ACTION SUBMITTALS

A. Product Data: For each type of product.

1. For each type of curtain fabric indicated, include durability, laundry temperature limits, fade resistance, applied curtain treatments, and fire-test-response characteristics.

B. Shop Drawings: For curtains and tracks.

1. Show layout and types of cubicles, sizes of curtains, number of carriers, anchorage details, and conditions requiring accessories. Indicate dimensions taken from field measurements.
2. Include details of blocking for track support.

C. Samples: For each exposed product and for each color and texture specified, 10 inches in size.

D. Samples for Initial Selection: For each type of curtain material indicated.

E. Samples for Verification: For each type of product required, prepared on Samples of size indicated below:

1. Curtain Fabric: Not less than 10 inches square and showing complete pattern repeat, from dye lot used for the Work, with specified treatments applied. Mark top and face of material.
2. Mesh Top: Not less than 10 inches square.
3. Curtain Track: Not less than 10 inches long.
4. Curtain Carrier: Full-size unit.

F. Product Schedule: For curtains and tracks. Use same designations indicated on Drawings.

1.4 CLOSEOUT SUBMITTALS

A. Operation and Maintenance Data: For curtains, tracks, and hardware to include in operation and maintenance manuals.

1.5 MAINTENANCE MATERIAL SUBMITTALS

A. Furnish extra materials described below that match products installed and that are packaged with protective covering for storage and identified with labels describing contents.

1. Curtain Carriers and Track End Caps: Full-size units equal to 3 percent of amount installed for each size indicated, but no fewer than 10 units.
2. Curtains: Full-size units equal to 10 percent of amount installed for each size indicated, but no fewer than two units.

1.6 QUALITY ASSURANCE

A. Mockups: Build mockups to verify selections made under Sample submittals, to demonstrate aesthetic effects, and to set quality standards for materials and execution.

1. Build mockup of typical cubicle as shown on Drawings.
2. Approval of mockups does not constitute approval of deviations from the Contract Documents contained in mockups unless Architect specifically approves such deviations in writing.
3. Subject to compliance with requirements, approved mockups may become part of the completed Work if undisturbed at time of Substantial Completion.

PART 2 - PRODUCTS

2.1 PERFORMANCE REQUIREMENTS

A. Cubicle Curtains: Provide curtain fabrics with the following characteristics:

1. Laundering: Launderable to a water temperature of not less than 160 deg F.
2. Flame Resistance: Provide fabrics identical to those that have passed NFPA 701 when tested by a qualified testing agency acceptable to authorities having jurisdiction.

a. Identify fabrics with appropriate markings of a qualified testing agency.

2.2 CUBICLE-CURTAIN SUPPORT SYSTEMS

A. Manufacturers: Subject to compliance with requirements, available manufacturers offering products that may be incorporated into the Work include, but are not limited to the following:

1. C/S Cubicle Curtains, a division of Construction Specialties, Inc.
2. InPro Corporation (IPC).
3. Salsbury Industries.

B. Extruded-Aluminum Curtain Track: Not less than 1-1/4 inches wide by 3/4-inch high.

1. Track Minimum Wall Thickness: Manufacturer's standard.
2. Curved Track: Factory-fabricated, 12-inch-radius bends.
3. Finish: Clear anodized.

C. Curtain Track Accessories: Fabricate splices, end caps, connectors, end stops, coupling and joining sleeves, wall flanges, brackets, ceiling clips, and other accessories from same material and with same finish as track.

1. End Stop: Removable with carrier hook.

D. Curtain Roller Carriers: Two nylon rollers and nylon axle with chrome-plated steel hook.

E. Exposed Fasteners: Stainless steel.

F. Concealed Fasteners: Hot-dip galvanized.

2.3 CURTAINS

A. Basis of Design Product: Subject to compliance with requirements, provide products by the following:

1. Designtex.

B. Fabric: Curtain manufacturer's standard; inherently and permanently flame resistant, stain resistant, and antimicrobial.

1. Color: As indicated in Section 090600.

C. Mesh Top: Size accordingly for ceiling height.

D. Curtain Grommets: Two-piece, rolled-edge, rustproof, nickel-plated brass; spaced not more than 6 inches o.c.; machined into top hem.

E. Beaded-Chain Curtain Drop: Nickel-plated steel with aluminum hook. Length as required by AHJ.

F. Snap Attachments: Provide manufacturer's standard nickel-plated brass snap attachments for modular panels.

G. Curtain Tieback: Nickel-plated brass chain; one at each curtain termination.

2.4 CURTAIN FABRICATION

A. Continuous Curtain Panels:

1. Width: Equal to track length from which curtain is hung plus 10 percent of added fullness, but not less than 12 inches of added fullness.
2. Length: Equal to floor-to-ceiling height, minus depth of track and carrier at top, and minus clearance above the finished floor of 12 inches.
3. Top Hem (when applicable): Not less than 1 inch and not more than 1-1/2 inches wide, triple thickness, reinforced with integral web, and double lockstitched.
4. Mesh Top (when applicable): Top hem of mesh not less than 1 inch and not more than 1-1/2 inches wide, triple thickness, reinforced with integral web, and double lockstitched.

Double lockstitch bottom of mesh directly to 1/2-inch triple thickness, top hem of curtain fabric.

5. Bottom Hem: Not less than 1 inch and not more than 1-1/2 inches wide, double thickness and single lockstitched.
6. Side Hems: Not less than 1/2 inch and not more than 1-1/4 inches wide, with double turned edges, and single lockstitched.
7. Vertical Seams: Not less than 1/2-inch-wide, double turned and double stitched.

PART 3 - EXECUTION

3.1 EXAMINATION

A. Examine substrates, areas, and conditions, with Installer present, for compliance with requirements for installation tolerances and other conditions affecting performance of the Work.

B. Proceed with installation only after unsatisfactory conditions have been corrected.

3.2 INSTALLATION

A. Install tracks level and plumb, according to manufacturer's written instructions.

B. For tracks of up to 20 feet in length, provide track fabricated from single, continuous length.

1. Curtain-Track Mounting: Surface.

C. Surface-Track Mounting: Fasten tracks to ceilings at intervals recommended by manufacturer. Fasten tracks to structure at each splice and tangent point of each corner. Center fasteners in track to ensure unencumbered carrier operation. Attach track to ceiling as follows:

1. Mechanically fasten directly to finished ceiling with toggle bolts.

D. Track Accessories: Install splices, end caps, connectors, end stops, coupling and joining sleeves, and other accessories as required for a secure and operational installation.

1. Provide one locking switch unit for each pair of beds.
2. Provide one hinged loading unit for each bed.

E. Curtain Carriers: Provide curtain carriers adequate for 6-inch spacing along full length of curtain plus an additional carrier.

F. Cubicle Curtains: Hang curtains on each curtain track. Secure with curtain tieback.

END OF SECTION

SECTION 102239

FOLDING PANEL PARTITIONS

PART 1 - GENERAL

1.1 RELATED DOCUMENTS

A. Drawings and general provisions of the Contract, including General and Supplementary Conditions and Division 01 Specification Sections, apply to this Section.

1.2 SUMMARY

A. Section Includes:

1. Manually operated, acoustical panel partitions.
2. Electrically operated, acoustical panel partitions.

1.3 DEFINITIONS

A. STC: Sound Transmission Class.

1.4 PREINSTALLATION MEETINGS

A. Preinstallation Conference: Conduct conference at Project site.

1.5 ACTION SUBMITTALS

A. Product Data: For each type of product.

B. Shop Drawings: For operable panel partitions.

1. Include plans, elevations, sections, attachment details, and numbered panel installation sequence.
2. Indicate stacking and operating clearances. Indicate location and installation requirements for hardware and track, blocking, and direction of travel.
3. Include diagrams for power, signal, and control wiring.

C. Samples for Initial Selection: For each type of exposed material, finish, covering, or facing.

1. Include Samples of accessories involving color selection.

D. Samples for Verification: For each type of exposed material, finish, covering, or facing, prepared on Samples of size indicated below:

E. Delegated-Design Submittal: For operable panel partitions.

1. Include design calculations for seismic restraints that brace tracks to structure above.

1.6 INFORMATIONAL SUBMITTALS

A. Coordination Drawings: Reflected ceiling plans, drawn to scale, on which the following items are shown and coordinated with each other, using input from installers of the items involved:

1. Partition track, track supports and bracing, switches, turning space, and storage layout.
2. Suspended ceiling components.
3. Structural members to which suspension systems will be attached.
4. Size and location of initial access modules for acoustical tile.
5. Items penetrating finished ceiling including the following:

a. Lighting fixtures.
b. HVAC ductwork, outlets, and inlets.
c. Speakers.
d. Sprinklers.
e. Smoke detectors.
f. Access panels.

B. Setting Drawings: For embedded items and cutouts required in other work, including support-beam.

C. Qualification Data: For Installer.

D. Product Certificates: For each type of operable panel partition.

1. Include approval letter signed by manufacturer acknowledging Owner-furnished panel facing material complies with requirements.

E. Product Test Reports: For each operable panel partition, for tests performed by a qualified testing agency.

F. Field quality-control reports.

G. Sample Warranty: For manufacturer's special warranty.

1.7 CLOSEOUT SUBMITTALS

A. Operation and Maintenance Data: For operable panel partitions to include in maintenance manuals.

1. In addition to items specified in Section 017823 "Operation and Maintenance Data," include the following:

a. Panel finish facings and finishes for exposed trim and accessories. Include precautions for cleaning materials and methods that could be detrimental to finishes and performance.
b. Seals, hardware, track, track switches, carriers, and other operating components.
c. Electric operator and controls.

1.8 MAINTENANCE MATERIAL SUBMITTALS

A. Furnish extra materials, from the same production run, that match products installed and that are packaged with protective covering for storage and identified with labels describing contents.

1. Panel Finish-Facing Material: Furnish full width in quantity to cover both sides of two panels when installed.

1.9 QUALITY ASSURANCE

A. Installer Qualifications: An entity that employs installers and supervisors who are trained and approved by manufacturer.

1.10 DELIVERY, STORAGE, AND HANDLING

A. Protectively package and sequence panels in order for installation. Clearly mark packages and panels with numbering system used on Shop Drawings. Do not use permanent markings on panels.

1.11 WARRANTY

A. Special Warranty: Manufacturer agrees to repair or replace components of operable panel partitions that fail in materials or workmanship within specified warranty period.

1. Failures include, but are not limited to, the following:

a. Faulty operation of operable panel partitions.
b. Deterioration of metals, metal finishes, and other materials beyond normal use.

2. Warranty Period: Two years from date of Substantial Completion. 10 years for trolleys and tracks.

PART 2 - PRODUCTS

2.1 PERFORMANCE REQUIREMENTS

A. Acoustical Performance: Provide operable panel partitions tested by a qualified testing agency for the following acoustical properties according to test methods indicated:

1. Sound-Transmission Requirements: Operable panel partition assembly tested for laboratory sound-transmission loss performance according to ASTM E 90, determined by ASTM E 413, and rated for not less than the STC indicated.

B. Fire-Test-Response Characteristics: Provide panels with finishes complying with one of the following as determined by testing identical products by a testing and inspecting agency acceptable to authorities having jurisdiction:

1. Surface-Burning Characteristics: Comply with ASTM E 84; testing by a qualified testing agency. Identify products with appropriate markings of applicable testing agency.

a. Flame-Spread Index: 25 or less.
b. Smoke-Developed Index: 450 or less.

2. Fire Growth Contribution: Complying with acceptance criteria of local code and authorities having jurisdiction when tested according to NFPA 286.

C. Fire Resistance: Provide fire-rated operable panel partition assemblies including pass doors complying with NFPA 80, based on testing according to UL 10B for fire-rated door assemblies.

1. Pass doors in fire-rated operable panel partition assemblies shall meet positive-pressure requirements.

D. Electrical Components, Devices, and Accessories: Listed and labeled as defined in NFPA 70, by a qualified testing agency, and marked for intended location and application.

2.2 OPERABLE ACOUSTICAL PANELS - ELECTRICAL

A. Operable Acoustical Panels: Partition system, including panels, seals, finish facing, suspension system, operators, and accessories.

1. Basis-of-Design Product: Subject to compliance with requirements, provide Modernfold, Inc.; Acousti-Seal Model AS933E, or comparable product by one of the following:

a. Advanced Equipment Corporation.
b. Hufcor, Inc.
c. Panelfold Inc.

B. Panel Operation: Electrically operated, continuously hinged panels.

C. Panel Construction: As required to support panel from suspension components and with reinforcement for hardware attachment. Fabricate panels with tight hairline joints and concealed fasteners. Fabricate panels so finished in-place partition is rigid; level; plumb; aligned, with tight joints and uniform appearance; and free of bow, warp, twist, deformation, and surface and finish irregularities.

D. Dimensions: Fabricate operable acoustical panel partitions to form an assembled system of dimensions indicated and verified by field measurements.

1. Panel Width: Standard widths.

E. STC: Not less than 52.

F. Panel Weight: 10 lb/sq. ft. maximum.

G. Panel Thickness: Model 933EG; Nominal dimension of 3-1/4 inches.

H. Panel Materials:

1. Steel Frame: Steel sheet, manufacturer's standard nominal minimum thickness for uncoated steel.
2. Steel Face/Liner Sheets: Tension-leveled steel sheet, 21-gauge minimum nominal thickness for uncoated steel.
3. Aluminum: Alloy and temper recommended by aluminum producer and finisher for type of use, corrosion resistance, and finish indicated; ASTM B 221 for extrusions; manufacturer's standard strengths and thicknesses for type of use.

a. Frame Reinforcement: Manufacturer's standard steel or aluminum.

4. Gypsum Board: ASTM C 1396/C 1396M.

I. Panel Closure: Manufacturer's standard unless otherwise indicated.

J. Panel Finish: Plastic laminate and vinyl as indicated on Drawings and Section 090600.

K. Vertical Seals: Deep-nesting, interlocking astragals mounted on each edge of panel, with continuous, resilient acoustical seal.

L. Horizontal Top Seals: Continuous-contact, resilient seal exerting uniform constant pressure on track.

M. Horizontal Bottom Seals: Resilient, mechanical, retractable, constant-force-contact seal exerting uniform constant pressure on floor when extended, ensuring horizontal and vertical sealing and resisting panel movement.

1. Mechanically Operated for Acoustical Panels: Extension and retraction of bottom seal by operating handle or built-in operating mechanism, with operating range not less than 1-1/2 inches between retracted seal and floor finish.

N. Hardware: Manufacturer's standard as required to operate operable panel partition and accessories; with decorative, protective finish.

1. Hinges: Full leaf butt hinges, attached directly to panel frame with welded hinge anchor plates within panel to further support hinge mounting to frame. Lifetime warranty on hinges.
2. Finish: Plastic laminate and vinyl as indicated on Drawings and Section 090600.

2.3 OPERABLE ACOUSTICAL PANELS - MANUAL

A. Operable Acoustical Panels: Partition system, including panels, seals, finish facing, suspension system, operators, and accessories.

1. Basis-of-Design Product: Subject to compliance with requirements, provide Modernfold, Inc.; Acousti-Seal Model 932, or comparable product by one of the following:

a. Advanced Equipment Corporation.
b. Hufcor, Inc.
c. Panelfold Inc.

B. Panel Operation: Manually operated, paired panels.

C. Panel Construction: As required to support panel from suspension components and with reinforcement for hardware attachment. Fabricate panels with tight hairline joints and concealed fasteners. Fabricate panels so finished in-place partition is rigid; level; plumb; aligned, with tight joints and uniform appearance; and free of bow, warp, twist, deformation, and surface and finish irregularities.

D. Dimensions: Fabricate operable acoustical panel partitions to form an assembled system of dimensions indicated and verified by field measurements.

1. Panel Width: Standard widths.

E. STC: Not less than 52.

F. Panel Weight: 11 lb/sq. ft. maximum.

G. Panel Thickness: Model 932; Nominal dimension of 3-1/4 inches.

H. Panel Materials:

1. Steel Frame: Steel sheet, manufacturer's standard nominal minimum thickness for uncoated steel.
2. Panel faces shall be of Class “A” rated tackable gypsum material assembled to appropriate acoustical backing to meet STC requirement and assembled to welded steel frame.
3. Aluminum: Alloy and temper recommended by aluminum producer and finisher for type of use, corrosion resistance, and finish indicated; ASTM B 221 for extrusions; manufacturer's standard strengths and thicknesses for type of use.

   a. Frame Reinforcement: Manufacturer's standard steel or aluminum.

4. Gypsum Board: ASTM C 1396/C 1396M.

I. Panel Closure: Manufacturer's standard unless otherwise indicated.

J. Panel faces shall be covered with factory-applied marker board, full height on each side, white color.

K. Trim color: As selected by the Architect from manufacturer’s standard range.

L. Hardware: Manufacturer's standard as required to operate operable panel partition and accessories; with decorative, protective finish.

M. Sound Seals:

1. Vertical interlocking sound seals between panels (astragals) of reversible tongue-andgroove configuration shall be required in each panel edge, permitting universal panel operation. Astragals shall be steel for maximum durability and fire resistance. Rigid plastic astragals or astragals in only one panel edge are not acceptable.
2. Horizontal top seals shall be continuous contact extruded vinyl bulb shape, with pairs of non-contacting vinyl fingers to prevent distortion and no mechanically-operated parts.
3. Horizontal bottom floor seals shall be automatic operable seals providing nominal 1- inch operating clearance with operating range of +/- 0.50-inch and shall automatically drop as panels are positioned (standard).

N. Hinges: Full leaf butt hinges, attached directly to panel frame with welded hinge anchor plates within panel to further support hinge mounting to frame. Lifetime warranty on hinges. Hinges mounted into panel edge or vertical astragal are not acceptable.

1. Each pair of panels to have minimum of three hinges

2.4 PANEL FINISH FACINGS

A. Refer to Section 090600.

2.5 SUSPENSION SYSTEMS – Electrically Operated Panels

A. Tracks: Modernfold #14 Suspension; 7-gauge (minimum) steel track shall be connected to structural support by minimum 1/2-inch diameter threaded steel hanger rods. Thickness and profile designed to support loads with maximum deflection of 1/360 of span.

B. Carriers: Each panel shall be supported by one 8-wheel ball bearing carrier. Wheels to be of hardened steel ball bearings encased with steel tires.

C. Steel Finish: Manufacturer's standard, factory-applied, corrosion-resistant, protective coating unless otherwise indicated.

2.6 SUSPENSION SYSTEMS – Manually Operated Panels

A. Tracks: Equal to Modernfold #17 suspension system 11 gauge (minimum) formed steel (or Hufcor Type 38, heavy-duty extruded aluminum). Track shall be connected to structural support by minimum 3/8-inch diameter threaded steel hanger rods. Thickness and profile designed to support loads with maximum deflection of 1/360 of span.

B. Track Soffit: Steel or aluminum soffit paint color selected by the Architect.

C. Carriers: Each panel shall be supported by one 4-wheel ball bearing carrier. Wheels to be of hardened steel ball bearings encased with steel or molded polymer tire.

D. Aluminum Finish: Mill finish or manufacturer's standard, factory-applied, decorative finish unless otherwise indicated.

E. Steel Finish: Manufacturer's standard, factory-applied, corrosion-resistant, protective coating unless otherwise indicated.

2.7 ELECTRIC OPERATORS

A. Factory-assembled electric operation system of size and capacity recommended and provided by operable panel partition manufacturer for partition specified; with electric motor and factory-prewired motor controls, speed reducer, chain drive, control stations, control devices, and accessories required for operation. Include wiring from control stations to motor. Coordinate operator wiring requirements and electrical characteristics with building electrical system.

B. Comply with NFPA 70.

C. Control Equipment: Comply with NEMA ICS 1, NEMA ICS 2, and NEMA ICS 6.

D. Motor Electrical Characteristics:

1. Horsepower: 1 hp.
2. Volts: 208.
3. Phase: Polyphase.
4. Hertz: 60.

E. Control Stations: Two single-key-operated, constant-pressure control stations located remotely from each other on opposite sides and opposite ends of partition run. Wire in series to require simultaneous activation of both key stations to operate partition. Each three-position control station labeled "Open," "Close," and " Stop." Furnish two keys per station.

2.8 INFARED SAFETY SYSTEM – Electrically Operated Doors

A. Provide and install dual key switch assembly as needed on each partition. Operable partitions shall operate by two (2) key control stations, wired in series and located on opposite sides of partition.

B. Provide and install sensor control panel that can accept various line voltage, therefore making it compatible with all partition systems. Control panel must be a “self-contained” system that will render electric partition inoperable if any of component parts malfunction. Control panel shall also reduce line voltage out onto infrared sensors and arming station down to 24 volts.

C. Infrared safety system must be designed to work as integral part of operable partition system. While partition is in operation, minimum of two infrared sensors monitor each side of partition for movement, and immediately disengages motor upon “safety zone” being interrupted. These infrared beams must span entire path of area to further detect motion in this area. Additional sensors will be installed as site conditions warrant. Sensors shall be installed 9-12 feet from floor and be covered by protective housing. Point-to-point units must also be equipped with alarm that will sound in event that system is activated.

D. Provide and install required signage for safe operating procedures

2.9 ACCESSORIES

A. Storage Pocket Door: Full height at end of partition runs to conceal stacked partition; of same materials, finish, construction, thickness, and acoustical qualities as panels; complete with operating hardware and acoustical seals at soffit, floor, and jambs. Hinges in finish to match other exposed hardware.

1. Manufacturer's standard method to secure storage pocket door in closed position.

PART 3 - EXECUTION

3.1 EXAMINATION

A. Examine flooring, floor levelness, structural support, and opening, with Installer present, for compliance with requirements for installation tolerances and other conditions affecting performance of operable panel partitions.

B. Proceed with installation only after unsatisfactory conditions have been corrected.

3.2 INSTALLATION

A. Install operable panel partitions and accessories after other finishing operations, including painting, have been completed in area of partition installation.

B. Install panels in numbered sequence indicated on Shop Drawings.

C. Broken, cracked, chipped, deformed, or unmatched panels are not acceptable.

D. Broken, cracked, deformed, or unmatched gasketing or gasketing with gaps at butted ends is not acceptable.

E. Light-Leakage Test: Illuminate one side of partition installation and observe vertical joints and top and bottom seals for voids. Adjust partitions for alignment and full closure of vertical joints and full closure along top and bottom seals.

3.3 ADJUSTING

A. Adjust operable panel partitions, hardware, and other moving parts to function smoothly, and lubricate as recommended by manufacturer.

B. Adjust pass doors and storage pocket doors to operate smoothly and easily, without binding or warping.

C. Verify that safety devices are properly functioning.

3.4 MAINTENANCE SERVICE

A. Maintenance Service: Beginning at Substantial Completion, maintenance service shall include 12 months' full maintenance by manufacturer's authorized service representative. Include quarterly preventive maintenance, repair or replacement of worn or defective components, lubrication, cleaning, and adjusting as required for proper operable-partition operation. Parts and supplies shall be manufacturer's authorized replacement parts and supplies.

3.5 DEMONSTRATION

A. Engage a factory-authorized service representative to train Owner's maintenance personnel to adjust, operate, and maintain operable panel partitions.

END OF SECTION

SECTION 102600

WALL AND CORNER PROTECTION

PART 1 - GENERAL

1.1 RELATED DOCUMENTS

A. Drawings and general provisions of the Contract, including General and Supplementary Conditions and Division 01 Specification Sections, apply to this Section.

1.2 SUMMARY

A. Section Includes:

1. Corner guards.

1.3 ACTION SUBMITTALS

A. Product Data: For each type of product.

1. Include construction details, material descriptions, impact strength, dimensions of individual components and profiles, and finishes.

B. Shop Drawings: For each type of wall and door protection showing locations and extent.

C. Samples for Initial Selection: For each type of impact-resistant wall-protection unit indicated, in each color and texture specified.

1. Include Samples of accent strips and accessories to verify color selection.

D. Samples for Verification: For each type of exposed finish on the following products, prepared on Samples of size indicated below:

1. Corner Guards: 12 inches long. Include example top caps.

1.4 INFORMATIONAL SUBMITTALS

A. Material Certificates: For each type of exposed plastic material.

B. Sample Warranty: For special warranty.

1.5 CLOSEOUT SUBMITTALS

A. Maintenance Data: For each type of wall and door protection product to include in maintenance manuals.

1. Include recommended methods and frequency of maintenance for maintaining best condition of plastic covers under anticipated traffic and use conditions. Include precautions against using cleaning materials and methods that may be detrimental to finishes and performance.

1.6 MAINTENANCE MATERIAL SUBMITTALS

A. Furnish extra materials that match products installed and that are packaged with protective covering for storage and identified with labels describing contents.

1. Corner-Guard Covers: Full-size plastic covers of maximum length equal to 2 percent of each type, color, and texture of cover installed, but no fewer than two, 48-inch-long units.
2. Mounting and Accessory Components: Amounts proportional to the quantities of extra materials. Package mounting and accessory components with each extra material.

1.7 DELIVERY, STORAGE, AND HANDLING

A. Store wall and door protection in original undamaged packages and containers inside well-ventilated area protected from weather, moisture, soiling, extreme temperatures, and humidity.

1. Maintain room temperature within storage area at not less than 70 deg F during the period plastic materials are stored.
2. Keep plastic materials out of direct sunlight.
3. Store plastic wall- and door-protection components for a minimum of 72 hours, or until plastic material attains a minimum room temperature of 70 deg F.

a. Store corner-guard covers in a vertical position.

1.8 WARRANTY

A. Special Warranty: Manufacturer agrees to repair or replace components of wall- and door-protection units that fail in materials or workmanship within specified warranty period.

1. Failures include, but are not limited to, the following:

a. Structural failures including detachment of components from each other or from the substrates, and permanent deformation beyond normal use.

2. Warranty Period: One year from date of Substantial Completion.

PART 2 - PRODUCTS

2.1 MANUFACTURERS

A. Source Limitations: Obtain wall- and door-protection products of each type from single source from single manufacturer.

2.2 PERFORMANCE REQUIREMENTS

A. Surface Burning Characteristics: Comply with ASTM E 84 or UL 723; testing by a qualified testing agency. Identify products with appropriate markings of applicable testing agency.

1. Flame-Spread Index: 25 or less.
2. Smoke-Developed Index: 450 or less.

B. Regulatory Requirements: Comply with applicable provisions in the U.S. Architectural & Transportation Barriers Compliance Board's ADA-ABA Accessibility Guidelines for Buildings and Facilities and ICC A117.1.

2.3 CORNER GUARDS

A. Surface-Mounted, Plastic-Cover Corner Guards: Manufacturer's standard assembly consisting of snap-on, resilient plastic cover installed over retainer; including mounting hardware; fabricated with 90- or 135-degree turn to match wall condition.

1. Basis of Design Product Subject to compliance with requirements, provide Construction Specialties, Inc.; SSM-20AN, or comparable product by one of the following:

   a. InPro Corporation (IPC).
   b. Koroseal Interior Products.
   c. Pawling Corporation.
   d. Tepromark Architectural products, LLC.

2. Cover: Extruded rigid plastic, minimum 0.078-inch wall thickness; as follows:

   a. Profile: Nominal 2-inch-long leg and 1/4-inch corner radius indicated.
   b. Height: 4 feet, unless indicated otherwise.
   c. Color and Texture: Refer to Section 090600.

3. Continuous Retainer: Minimum 0.060-inch-thick, one-piece, extruded aluminum.
4. Retainer Clips: Manufacturer's standard impact-absorbing clips.
5. Top and Bottom Caps: Prefabricated, injection-molded plastic; color matching cover; field adjustable for close alignment with snap-on cover.

2.4 MATERIALS

A. Plastic Materials: Chemical- and stain-resistant, high-impact-resistant plastic with integral color throughout; extruded and sheet material as required, thickness as indicated.

2.5 FABRICATION

A. Fabricate wall and door protection according to requirements indicated for design, performance, dimensions, and member sizes, including thicknesses of components.

B. Factory Assembly: Assemble components in factory to greatest extent possible to minimize field assembly. Disassemble only as necessary for shipping and handling.

C. Quality: Fabricate components with uniformly tight seams and joints and with exposed edges rolled. Provide surfaces free of wrinkles, chips, dents, uneven coloration, and other imperfections. Fabricate members and fittings to produce flush, smooth, and rigid hairline joints.

2.6 FINISHES

A. Protect finishes on exposed surfaces from damage by applying a strippable, temporary protective covering before shipping.

B. Appearance of Finished Work: Noticeable variations in same piece are not acceptable. Variations in appearance of adjoining components are acceptable if they are within the range of approved Samples and are assembled or installed to minimize contrast.

PART 3 - EXECUTION

3.1 EXAMINATION

A. Examine substrates and wall areas, with Installer present, for compliance with requirements for installation tolerances**,** fire rating, and other conditions affecting performance of the Work.

B. Examine walls to which wall and door protection will be attached for blocking, grounds, and other solid backing that have been installed in the locations required for secure attachment of support fasteners.

1. For wall protection attached with adhesive, verify compatibility with and suitability of substrates, including compatibility with existing finishes or primers.

C. Proceed with installation only after unsatisfactory conditions have been corrected.

3.2 PREPARATION - GENERAL

A. Complete finishing operations, including painting, before installing wall and door protection.

B. Before installation, clean substrate to remove dust, debris, and loose particles.

3.3 INSTALLATION - GENERAL

A. Installation Quality: Install wall and door protection according to manufacturer's written instructions, level, plumb, and true to line without distortions. Do not use materials with chips, cracks, voids, stains, or other defects that might be visible in the finished Work.

B. Mounting Heights: Install wall and door protection in locations and at mounting heights indicated on Drawings.

C. Accessories: Provide splices, mounting hardware, anchors, trim, joint moldings, and other accessories required for a complete installation.

1. Provide anchoring devices and suitable locations to withstand imposed loads.

3.4 CLEANING

A. Immediately after completion of installation, clean plastic covers and accessories using a standard ammonia-based household cleaning agent.

END OF SECTION

SECTION 102800

TOILET, BATH, AND LAUNDRY ACCESSORIES

PART 1 - GENERAL

1.1 RELATED DOCUMENTS

A. Drawings and general provisions of the Contract, including General and Supplementary Conditions and Division 01 Specification Sections, apply to this Section.

1.2 SUMMARY

A. Section Includes:

1. Public-use washroom accessories.
2. Underlavatory guards.
3. Custodial accessories.
4. Electric hand dryer.

1.3 COORDINATION

A. Coordinate accessory locations with other work to prevent interference with clearances required for access by people with disabilities, and for proper installation, adjustment, operation, cleaning, and servicing of accessories.

B. Deliver inserts and anchoring devices set into concrete or masonry as required to prevent delaying the Work.

1.4 ACTION SUBMITTALS

A. Product Data: For each type of product.

1. Include construction details, material descriptions, dimensions of individual components and profiles, and finishes.
2. Include anchoring and mounting requirements, including requirements for cutouts in other work and substrate preparation.

B. Samples: Full size, for each exposed product and for each finish specified.

1. Approved full-size Samples will be returned and may be used in the Work.

C. Product Schedule: Indicating types, quantities, sizes, and installation locations by room of each accessory required.

1. Identify locations using room designations indicated.
2. Identify accessories using designations indicated.

1.5 INFORMATIONAL SUBMITTALS

A. Sample Warranty: For manufacturer's special warranty.

1.6 CLOSEOUT SUBMITTALS

A. Maintenance Data: For accessories to include in maintenance manuals.

1.7 WARRANTY

A. Manufacturer's Special Warranty for Mirrors: Manufacturer agrees to repair or replace mirrors that fail in materials or workmanship within specified warranty period.

1. Failures include, but are not limited to, visible silver spoilage defects.
2. Warranty Period: 15 years from date of Substantial Completion.

PART 2 - PRODUCTS

2.1 OWNER-FURNISHED MATERIALS

A. Owner-Furnished and Installed Materials:

1. Paper towel dispenser.
2. Toilet tissue dispenser.
3. Soap dispenser.

2.2 PUBLIC-USE WASHROOM ACCESSORIES

A. Basis of Design Product: Subject to compliance with requirements, provide products by Bobrick Washroom Equipment, Inc., or comparable product by one of the following:

1. AJW Architectural Products.
2. American Specialties, Inc.
3. Bradley Corporation.

B. Grab Bars: 18 ga, type 304 S.S., 1-1/2-inch O.D. Bars with Satin finish, model# B-6806 Series.

C. Mirror: B 1658, tempered glass, channel-frame.

D. Refer to Toilet Room Equipment Schedule on Drawings for mounting heights.

2.3 UNDERLAVATORY GUARDS

A. Manufacturers: Subject to compliance with requirements, available manufacturers offering products that may be incorporated into the Work include, but are not limited to, the following:

1. Plumberex Specialty Products, Inc.
2. Truebro by IPS Corporation.

B. Under lavatory Guard:

1. Description: Insulating pipe covering for supply and drain piping assemblies that prevent direct contact with and burns from piping; allow service access without removing coverings.
2. Material and Finish: Antimicrobial, molded plastic, white.

2.4 CUSTODIAL ACCESSORIES

A. Mop and Broom Holder:

1. Basis of Design Product: Subject to compliance with requirements, provide products by Bobrick Washroom Equipment, Inc., or comparable product by one of the following:

   a. AJW Architectural Products.
   b. American Specialties, Inc.
   c. Bradley Corporation.

2. Description: Unit with shelf, hooks, holders, and rod suspended beneath shelf. #B-224 by 36 inches.
3. Material and Finish: Stainless steel, No. 4 finish (satin).

2.5 WARM-AIR DRYERS

A. Source Limitations: Obtain warm-air dryers from single source from single manufacturer.

B. Warm-Air Dryer:

1. Basis-of-Design Product: Subject to compliance with requirements, provide Excel Dryer Inc.; Xlerator Hand Dryer, Model XL-SB, or a comparable product by one of the following:

   a. American Specialties, Inc.
   b. Bobrick Washroom Equipment, Inc.
   c. Bradley Corporation.

2. Description: High-speed, warm-air hand dryer for rapid hand drying.
3. Mounting: Surface mounted.
4. Operation: Electronic-sensor activated.
5. Cover Material and Finish: Brushed Stainless steel, No. 4 finish (satin).
6. Electrical Requirements: As indicated on Drawings.

C. Accessories:

1. 1.1 inch Noise Reduction Nozzle.
2. ADA-Compliant Recess Kit (40502)., Brushed Stainless steel.

2.6 MATERIALS

A. Stainless Steel: ASTM A 666, Type 304, 0.0312-inch minimum nominal thickness, unless otherwise indicated.

B. Steel Sheet: ASTM A 1008/A 1008M, Designation CS (cold rolled, commercial steel), 0.0359-inch minimum nominal thickness.

C. Galvanized-Steel Sheet: ASTM A 653/A 653M, with G60 hot-dip zinc coating.

D. Galvanized Steel Mounting Devices: ASTM A 153/A 153M, hot-dip galvanized after fabrication.

E. Fasteners: Screws, bolts, and other devices of same material as accessory unit and tamper-and-theft resistant where exposed, and of galvanized steel where concealed.

F. Mirrors: ASTM C 1503, Mirror Glazing Quality, clear-glass mirrors, nominal 6.0 mm thick.

G. ABS Plastic: Acrylonitrile-butadiene-styrene resin formulation.

2.7 FABRICATION

A. General: Fabricate units with tight seams and joints, and exposed edges rolled. Hang doors and access panels with full-length, continuous hinges. Equip units for concealed anchorage and with corrosion-resistant backing plates.

B. Keys: Provide universal keys for internal access to accessories for servicing and resupplying. Provide minimum of six keys to Owner's representative.

PART 3 - EXECUTION

3.1 INSTALLATION

A. Install accessories according to manufacturers' written instructions, using fasteners appropriate to substrate indicated and recommended by unit manufacturer. Install units level, plumb, and firmly anchored in locations and at heights indicated.

B. Grab Bars: Install to withstand a downward load of at least 250 lbf, when tested according to method in ASTM F 446.

3.2 ADJUSTING AND CLEANING

A. Adjust accessories for unencumbered, smooth operation. Replace damaged or defective items.

B. Remove temporary labels and protective coatings.

C. Clean and polish exposed surfaces according to manufacturer's written recommendations.

END OF SECTION

SECTION 104413

FIRE PROTECTION CABINETS

PART 1 - GENERAL

1.1 RELATED DOCUMENTS

A. Drawings and general provisions of the Contract, including General and Supplementary Conditions and Division 01 Specification Sections, apply to this Section.

1.2 SUMMARY

A. Section Includes:

1. Fire protection cabinets for the following:

a. Portable fire extinguishers.

1.3 PREINSTALLATION CONFERENCE

A. Preinstallation Conference: Conduct conference at Project site.

1. Review methods and procedures related to fire-protection cabinets including, but not limited to, the following:

a. Schedules and coordination requirements.

1.4 ACTION SUBMITTALS

A. Product Data: For each type of product. Show door hardware, cabinet type, trim style, and panel style. Include roughing-in dimensions and details showing recessed-, semirecessed-, or surface-mounting method and relationships of box and trim to surrounding construction.

B. Shop Drawings: For fire-protection cabinets. Include plans, elevations, sections, details, and attachments to other work.

C. Product Schedule: For fire-protection cabinets. Indicate whether recessed, semirecessed, or surface mounted. Coordinate final fire-protection cabinet schedule with fire-extinguisher schedule to ensure proper fit and function. Use same designations indicated on Drawings.

1.5 CLOSEOUT SUBMITTALS

A. Maintenance Data: For fire-protection cabinets to include in maintenance manuals.

1.6 COORDINATION

A. Coordinate size of fire protection cabinets to ensure that type and capacity of fire extinguishers indicated are accommodated.

B. Coordinate sizes and locations of fire protection cabinets with wall depths.

1.7 SEQUENCING

A. Apply decals or vinyl lettering on field-painted, fire protection cabinets after painting is complete.

PART 2 - PRODUCTS

2.1 PERFORMANCE REQUIREMENTS

A. Fire-Rated Fire-Protection Cabinets: Listed and labeled to comply with requirements in ASTM E 814 for fire-resistance rating of walls where they are installed.

2.2 FIRE PROTECTION CABINET

A. Cabinet Type: Suitable for fire extinguisher.

1. Manufacturers: Subject to compliance with requirements, available manufacturers offering products that may be incorporated into the Work include, but are not limited to the following:

a. JL Industries, Inc.; a division of the Activar Construction Products Group.
b. Larsens Manufacturing Company.
c. Potter Roemer LLC.

B. Cabinet Construction: Nonrated.

C. Cabinet Material: Cold-rolled steel sheet.

1. Shelf: Same metal and finish as cabinet.

D. Semirecessed Cabinet: One-piece combination trim and perimeter door frame overlapping surrounding wall surface with exposed trim face and wall return at outer edge (backbend).

1. Square-Edge Trim: 1-1/4- to 1-1/2-inch backbend depth.

E. Cabinet Trim Material: Aluminum sheet.

F. Door Material: Aluminum sheet.

G. Door Style: Full acrylic bubble with frame.

H. Door Glazing: Molded acrylic bubble.

1. Acrylic Bubble Color: Clear, transparent.

I. Door Hardware: Manufacturer's standard door-operating hardware of proper type for cabinet type, trim style, and door material and style indicated.

1. Provide projecting lever handle with cam-action latch.
2. Provide manufacturer's standard hinge permitting door to open 180 degrees.

J. Materials:

1. Cold-Rolled Steel: ASTM A 1008/A 1008M, Commercial Steel (CS), Type B.

a. Finish: Baked enamel or powder coat.
b. Color: As selected by Architect from full range of industry colors and color densities.

2. Aluminum: ASTM B 221, with strength and durability characteristics of not less than Alloy 6063-T5 for aluminum sheet. ASTM B 221 for extruded shapes.

a. Finish: Clear anodic.

3. Transparent Acrylic Sheet: ASTM D 4802, Category A-1 (cell-cast sheet), with Finish 1 (smooth or polished).

2.3 FABRICATION

A. Fire Protection Cabinets: Provide manufacturer's standard box (tub) with trim, frame, door, and hardware to suit cabinet type, trim style, and door style indicated.

1. Weld joints and grind smooth.
2. Provide factory-drilled mounting holes.
3. Prepare doors and frames to receive locks.
4. Install door locks at factory.

B. Cabinet Doors: Fabricate doors according to manufacturer's standards, from materials indicated and coordinated with cabinet types and trim styles selected.

1. Fabricate door frames with tubular stiles and rails and hollow-metal design, minimum 1/2 inch thick.
2. Fabricate door frames of one-piece construction with edges flanged.
3. Miter and weld perimeter door frames.

C. Cabinet Trim: Fabricate cabinet trim in one piece with corners mitered, welded, and ground smooth.

2.4 GENERAL FINISH REQUIREMENTS

A. Comply with NAAMM's "Metal Finishes Manual for Architectural and Metal Products" for recommendations for applying and designating finishes.

B. Protect mechanical finishes on exposed surfaces of fire protection cabinets from damage by applying a strippable, temporary protective covering before shipping.

C. Finish fire protection cabinets after assembly.

D. Appearance of Finished Work: Noticeable variations in same piece are not acceptable. Variations in appearance of adjoining components are acceptable if they are within the range of approved Samples and are assembled or installed to minimize contrast.

PART 3 - EXECUTION

3.1 EXAMINATION

A. Examine walls and partitions for suitable framing depth and blocking where recessed and semi-recessed cabinets will be installed.

B. Proceed with installation only after unsatisfactory conditions have been corrected.

3.2 PREPARATION

A. Prepare recesses for recessed and semi-recessed fire protection cabinets as required by type and size of cabinet and trim style.

3.3 INSTALLATION

A. General: Install fire-protection cabinets in locations and at mounting heights indicated or, if not indicated, at heights indicated below:

1. Fire-Protection Cabinets: 54 inches above finished floor to top of cabinet.

B. Fire Protection Cabinets: Fasten cabinets to structure, square and plumb.

1. Unless otherwise indicated, provide recessed fire protection cabinets. If wall thickness is not adequate for recessed cabinets, provide semi-recessed fire protection cabinets.
2. Fasten mounting brackets to inside surface of fire protection cabinets, square and plumb.

C. Identification: Apply decals at locations indicated.

3.4 ADJUSTING AND CLEANING

A. Remove temporary protective coverings and strippable films, if any, as fire protection cabinets are installed unless otherwise indicated in manufacturer's written installation instructions.

B. Adjust fire protection cabinet doors to operate easily without binding. Verify that integral locking devices operate properly.

C. On completion of fire protection cabinet installation, clean interior and exterior surfaces as recommended by manufacturer.

D. Touch up marred finishes, or replace fire protection cabinets that cannot be restored to factory-finished appearance. Use only materials and procedures recommended or furnished by fire protection cabinet and mounting bracket manufacturers.

E. Replace fire protection cabinets that have been damaged or have deteriorated beyond successful repair by finish touchup or similar minor repair procedures.

END OF SECTION

SECTION 104416

FIRE EXTINGUISHERS

PART 1 - GENERAL

1.1 RELATED DOCUMENTS

A. Drawings and general provisions of the Contract, including General and Supplementary Conditions and Division 01 Specification Sections, apply to this Section.

1.2 SUMMARY

A. Section includes portable, hand-carried fire extinguishers.

1.3 PREINSTALLATION MEETINGS

A. Preinstallation Conference: Conduct conference at Project site.

1. Review methods and procedures related to fire extinguishers including, but not limited to, the following:

a. Schedules and coordination requirements.

1.4 ACTION SUBMITTALS

A. Product Data: For each type of product indicated. Include rating and classification, material descriptions, dimensions of individual components and profiles, and finishes for fire extinguisher.

B. Product Schedule: For fire extinguishers. Coordinate final fire extinguisher schedule with fire protection cabinet schedule to ensure proper fit and function. Use same designations indicated on Drawings.

1.5 INFORMATIONAL SUBMITTALS

A. Warranty: Sample of special warranty.

1.6 CLOSEOUT SUBMITTALS

A. Operation and Maintenance Data: For fire extinguishers to include in maintenance manuals.

1.7 COORDINATION

A. Coordinate type and capacity of fire extinguishers with fire-protection cabinets to ensure fit and function.

COORDINATION

B. Coordinate type and capacity of fire extinguishers with fire protection cabinets to ensure fit and function.

1.8 WARRANTY

A. Special Warranty: Manufacturer's standard form in which manufacturer agrees to repair or replace fire extinguishers that fail in materials or workmanship within specified warranty period.

1. Failures include, but are not limited to, the following:

a. Failure of hydrostatic test according to NFPA 10.
b. Faulty operation of valves or release levers.

2. Warranty Period: Six years from date of Substantial Completion.

PART 2 - PRODUCTS

2.1 PERFORMANCE REQUIREMENTS

A. NFPA Compliance: Fabricate and label fire extinguishers to comply with NFPA 10, "Portable Fire Extinguishers."

B. Fire Extinguishers: Listed and labeled for type, rating, and classification by an independent testing agency acceptable to authorities having jurisdiction.

1. Provide fire extinguishers approved, listed, and labeled by FM Global.

2.2 PORTABLE, HAND-CARRIED FIRE EXTINGUISHERS

A. Fire Extinguishers: Type, size, and capacity for each fire protection cabinet and mounting bracket.

1. Manufacturers: Subject to compliance with requirements, available manufacturers offering products that may be incorporated into the Work include, but are not limited to, the following:

a. J. L. Industries, Inc.
b. Larsen's Manufacturing Company.
c. Potter Roemer LLC.

2. Valves: Manufacturer's standard.
3. Handles and Levers: Manufacturer's standard.
4. Instruction Labels: Include pictorial marking system complying with NFPA 10, Appendix B and bar coding for documenting fire extinguisher location, inspections, maintenance, and recharging.

B. Wet-Chemical Type: UL-rated 2-A:1-B:C:K, 1.6-gal. nominal capacity, with potassium acetate-based chemical in stainless-steel container; with pressure-indicating gage.

C. Multipurpose Dry-Chemical Type in Steel Container: UL-rated 4-A:80-B:C, 10-lb nominal capacity, with monoammonium phosphate-based dry chemical in enameled-steel container.

2.3 MOUNTING BRACKETS

A. Mounting Brackets (Where not indicated to be in cabinets): Manufacturer's standard steel, designed to secure fire extinguisher to wall or structure, of sizes required for types and capacities of fire extinguishers indicated, with red or black baked-enamel finish.

1. Manufacturers: Subject to compliance with requirements, available manufacturers offering products that may be incorporated into the Work include, but are not limited to the following:

a. JL Industries, Inc.; a division of the Activar Construction Products Group.
b. Larsens Manufacturing Company.
c. Potter Roemer LLC.

PART 3 - EXECUTION

3.1 EXAMINATION

A. Examine fire extinguishers for proper charging and tagging.

1. Remove and replace damaged, defective, or undercharged fire extinguishers.

B. Proceed with installation only after unsatisfactory conditions have been corrected.

3.2 INSTALLATION

A. General: Install fire extinguishers and mounting brackets in locations indicated and in compliance with requirements of authorities having jurisdiction.

1. Mounting Brackets: 54 inches above finished floor to top of fire extinguisher.

B. Mounting Brackets: Fasten mounting brackets to surfaces, square and plumb, at locations indicated.

END OF SECTION

SECTION 105113

METAL LOCKERS

PART 1 - GENERAL

1.1 RELATED DOCUMENTS

A. Drawings and general provisions of the Contract, including General and Supplementary Conditions and Division 01 Specification Sections, apply to this Section.

1.2 SUMMARY

A. Section Includes:

1. Knocked-down lockers.

1.3 PREINSTALLATION MEETINGS

A. Preinstallation Conference: Conduct conference at Project site.

1.4 ACTION SUBMITTALS

A. Product Data: For each type of product.

1. Include construction details, material descriptions, dimensions of individual components and profiles, and finishes for each type of metal locker.

B. Shop Drawings: For metal lockers.

1. Include plans, elevations, sections, and attachment details.
2. Show locker trim and accessories.
3. Include locker identification system and numbering sequence.

C. Samples for Initial Selection: Manufacturer's color charts showing the full range of colors available.

D. Product Schedule: For lockers. Use same designations indicated on Drawings.

1.5 INFORMATIONAL SUBMITTALS

A. Qualification Data: For Installer.

B. Sample Warranty: For special warranty.

1.6 CLOSEOUT SUBMITTALS

A. Maintenance Data: For adjusting, repairing, and replacing locker doors and latching mechanisms to include in maintenance manuals.

1.7 MAINTENANCE MATERIAL SUBMITTALS

A. Furnish extra materials that match products installed and that are packaged with protective covering for storage and identified with labels describing contents.

1. The following metal locker hardware items equal to 10 percent of amount installed for each type and finish installed, but no fewer than five units:

a. Locks.
b. Blank identification plates.
c. Hooks.

1.8 DELIVERY, STORAGE, AND HANDLING

A. Do not deliver metal lockers until spaces to receive them are clean, dry, and ready for their installation.

1.9 FIELD CONDITIONS

A. Field Measurements: Verify actual dimensions of recessed openings by field measurements before fabrication.

1.10 COORDINATION

A. Coordinate sizes and locations of framing, blocking, furring, reinforcements, and other related units of work specified in other Sections to ensure that metal lockers can be supported and installed as indicated.

1.11 WARRANTY

A. Special Warranty: Manufacturer agrees to repair or replace components of metal lockers that fail in materials or workmanship, excluding finish, within specified warranty period.

1. Warranty Period for Knocked-Down Metal Lockers: Two years from date of Substantial Completion.

PART 2 - PRODUCTS

2.1 PERFORMANCE REQUIREMENTS

A. Accessibility Requirements: For lockers indicated to be accessible, comply with applicable provisions in the U.S. Architectural & Transportation Barriers Compliance Board's ADA-ABA Accessibility Guidelines and ICC A117.1.

2.2 KNOCKED-DOWN LOCKERS

A. Manufacturers: Subject to compliance with requirements, available manufacturers offering products that may be incorporated into the Work include, but are not limited to the following:

1. ASI Storage Solutions; ASI Group.
2. List Industries Inc.
3. Lyon Workspace Products, LLC.
4. Penco Products, Inc.
5. Republic Storage Systems, LLC.

B. Doors: One piece; fabricated from 0.060-inch nominal-thickness steel sheet; formed into channel shape with double bend at vertical edges and with right-angle single bend at horizontal edges.

1. Doors less than 12 inches wide may be fabricated from 0.048-inch nominal-thickness steel sheet.
2. Reinforcement: Manufacturer's standard reinforcing angles, channels, or stiffeners for doors more than 15 inches wide; welded to inner face of doors.
3. Stiffeners: Manufacturer's standard full-height stiffener fabricated from 0.048-inch nominal-thickness steel sheet; welded to inner face of doors.
4. Sound-Dampening Panels: Manufacturer's standard, designed to stiffen doors and reduce sound levels when doors are closed, of die-formed metal with full perimeter flange and sound-dampening material; welded to inner face of doors.
5. Door Style: Vented panel as follows:

   a. Louvered Vents: No fewer than three louver openings.

C. Body: Assembled by riveting or bolting body components together. Fabricate from unperforated steel sheet as follows:

1. Tops, Bottoms, and Intermediate Dividers: 0.024-inch nominal thickness, with single bend at sides.
2. Backs and Sides: 0.024-inch nominal thickness, with full-height, double-flanged connections.
3. Shelves: 0.024-inch nominal thickness, with double bend at front and single bend at sides and back.

D. Frames: Channel formed; fabricated from 0.060-inch nominal-thickness steel sheet; lapped and factory welded at corners; with top and bottom main frames factory welded into vertical main frames. Form continuous, integral, full height door strikes on vertical main frames.

E. Hinges: Welded to door and attached to door frame with no fewer than two factory-installed rivets per hinge that are completely concealed and tamper resistant when door is closed; fabricated to swing 180 degrees.

1. Knuckle Hinges: Steel, full loop, five knuckles, tight pin; minimum 2 inches high.

F. Recessed Door Handle and Latch: Stainless-steel cup with integral door pull, recessed so locking device does not protrude beyond face of door; pry and vandal resistant.

1. Multipoint Latching: Finger-lift latch control designed for use with padlocks; positive automatic latching and prelocking.

a. Latch Hooks: Equip doors 48 inches and higher with three latch hooks; fabricated from 0.105-inch nominal-thickness steel sheet; welded or riveted to full-height door strikes; with resilient silencer on each latch hook.
b. Latching Mechanism: Manufacturer's standard, rattle-free latching mechanism and moving components isolated, with vinyl or nylon to prevent metal-to-metal contact, and incorporating a prelocking device that allows locker door to be locked while door is open and then closed without unlocking or damaging lock or latching mechanism.

G. Locks: Combination padlocks.

H. Identification Plates: Manufacturer's standard, etched, embossed, or stamped aluminum plates, with numbers and letters at least 3/8-inch high.

I. Hooks: Manufacturer's standard ball-pointed hooks, aluminum or steel; zinc plated.

J. Continuous Zee Base: Fabricated from manufacturer's standard thickness, but not less than 0.060-inch nominal-thickness steel sheet.

1. Height: 4 inches.

K. Continuous Sloping Tops: Fabricated from manufacturer's standard thickness, but not less than 0.036-inch nominal-thickness steel sheet.

1. Closures: Vertical-end type.

L. Finished End Panels: Fabricated from 0.024-inch nominal-thickness steel sheet to cover unused penetrations and fasteners, except for perimeter fasteners, at exposed ends of nonrecessed metal lockers; finished to match lockers.

M. Materials:

1. Cold-Rolled Steel Sheet: ASTM A 1008/A 1008M, Commercial Steel (CS), Type B, suitable for exposed applications.

N. Finish: Baked enamel.

1. Color(s): Refer to Section 090600.

2.3 LOCKS

A. Combination Padlock: Provided by Owner.

2.4 FABRICATION

A. Fabricate metal lockers square, rigid, without warp, and with metal faces flat and free of dents or distortion. Make exposed metal edges safe to touch and free of sharp edges and burrs.

1. Form body panels, doors, shelves, and accessories from one-piece steel sheet unless otherwise indicated.
2. Provide fasteners, filler plates, supports, clips, and closures as required for complete installation.

B. Fabricate each metal locker with an individual door and frame; individual top, bottom, and back; and common intermediate uprights separating compartments.

C. Equipment: Provide each locker with an identification plate and the following equipment:

1. Double-Tier Units: One double-prong ceiling hook and two single-prong wall hooks.

D. Knocked-Down Construction: Fabricate metal lockers using nuts, bolts, screws, or rivets for nominal assembly at Project site.

E. Accessible Lockers: Fabricate as follows:

1. Locate bottom shelf no lower than 15 inches above the floor.

F. Continuous Zee Base: Fabricated in lengths as long as practical to enclose base and base ends; finished to match lockers.

G. Continuous Sloping Tops: Fabricated in lengths as long as practical, without visible fasteners at splice locations; finished to match lockers.

H. Filler Panels: Fabricated in an unequal leg angle shape; finished to match lockers. Provide slip-joint filler angle formed to receive filler panel.

I. Finished End Panels: Designed for concealing unused penetrations and fasteners, except for perimeter fasteners, at exposed ends of nonrecessed metal lockers; finished to match lockers.

2.5 ACCESSORIES

A. Fasteners: Zinc- or nickel-plated steel, slotless-type, exposed bolt heads; with self-locking nuts or lock washers for nuts on moving parts.

B. Anchors: Material, type, and size required for secure anchorage to each substrate.

1. Provide nonferrous-metal or hot-dip galvanized anchors and inserts on inside face of exterior walls, and elsewhere as indicated, for corrosion resistance.
2. Provide toothed-steel or lead expansion sleeves for drilled-in-place anchors.

PART 3 - EXECUTION

3.1 EXAMINATION

A. Examine walls and floors or support bases, with Installer present, for compliance with requirements for installation tolerances and other conditions affecting performance of the Work.

B. Prepare written report, endorsed by Installer, listing conditions detrimental to performance of the Work.

C. Proceed with installation only after unsatisfactory conditions have been corrected.

3.2 INSTALLATION

A. General: Install lockers level, plumb, and true; shim as required, using concealed shims.

1. Anchor locker runs at ends and at intervals recommended by manufacturer, but not more than 36 inches o.c. Using concealed fasteners, install anchors through backup reinforcing plates, channels, or blocking as required to prevent metal distortion.
2. Anchor single rows of metal lockers to walls near top and bottom of lockers.
3. Anchor back-to-back metal lockers to floor.

B. Knocked-Down Lockers: Assemble with manufacturer's standard fasteners, with no exposed fasteners on door faces or face frames.

C. Equipment:

1. Attach hooks with at least two fasteners.
2. Attach door locks on doors using security-type fasteners.
3. Identification Plates: Identify metal lockers with identification indicated on Drawings.

a. Attach plates to each locker door, near top, centered, with at least two aluminum rivets.

D. Trim: Fit exposed connections of trim, fillers, and closures accurately together to form tight, hairline joints, with concealed fasteners and splice plates.

1. Attach recess trim to recessed metal lockers with concealed clips.
2. Attach filler panels with concealed fasteners. Locate filler panels where indicated on Drawings.
3. Attach finished end panels using fasteners only at perimeter to conceal exposed ends of nonrecessed metal lockers.

3.3 ADJUSTING

A. Clean, lubricate, and adjust hardware. Adjust doors and latches to operate easily without binding.

3.4 PROTECTION

A. Protect metal lockers from damage, abuse, dust, dirt, stain, or paint. Do not permit use during construction.

B. Touch up marred finishes, or replace metal lockers that cannot be restored to factory-finished appearance. Use only materials and procedures recommended or furnished by locker manufacturer.

END OF SECTION

SECTION 107316

METAL CANOPIES

PART 1 - GENERAL

1.1 RELATED DOCUMENTS

A. Drawings and general provisions of the Contract, including General and Supplementary Conditions and Division 01 Specification Sections, apply to this Section.

1.2 SUMMARY

A. Section Includes:

1. Extruded aluminum overhead hanger rod style canopies.

B. Related Items and Considerations:

1. Flashing of various designs may be required. Supplied by the installer.
2. Determine wall construction, make-up and thickness.
3. Ensure adequate wall condition to carry canopy loads where required.
4. Consider water drainage away from canopy where necessary.
5. Any necessary removal or relocation of existing structures, obstructions or materials.

1.3 ACTION SUBMITTALS

A. Product Data: For each type of product, including finishing materials.

B. Shop Drawings: Show fabrication and installation details for canopy.

1. Include plans, elevations, component details, and attachment details.
2. Indicate materials and profiles of each canopy, fittings, joinery, finishes, fasteners, anchorages, and accessory items.

C. Samples: For each type of exposed finish required, prepared on 6-inch-square Samples of metal of same thickness and material indicated for the Work.

1.4 INFORMATIONAL SUBMITTALS

A. Qualification Data: For Installer.

1.5 DELIVERY, STORAGE, AND HANDLING

A. Deliver canopy products wrapped in protective coverings and strapped together in suitable packs or in heavy-duty cartons. Remove protective coverings before they stain or bond to finished surfaces.

B. Store products on elevated platforms in a dry location.

1.6 FIELD CONDITIONS

A. Confirm dimensions prior to preparation of shop drawings when possible.

B. If requested, supply manufacturer's standard literature and specifications for canopies.

C. Submit shop drawings showing structural component locations/positions, material dimensions and details of construction and assembly.

PART 2 - PRODUCTS

2.1 PERFORMANCE REQUIREMENTS

A. Canopy must conform to local building codes.

B. Determine if specific load requirements have been established for canopies and if stamped calculations are required for location in which canopy is installed.

C. The canopy must handle the minimum PSF live load indicated on Structural Drawings.

2.2 MANUFACTURERS

A. Basis of Design Product: Subject to compliance with requirements, provide the following:

1. Mapes Canopies; Super Lumideck Flat Soffit hanger rod canopy. Ph: (888) 273-1132.

2.3 MATERIALS

A. Decking to be 3" extruded flat soffit .078 decking.

B. Fascia shall be standard 8" extruded "J" style (minimum .125 aluminum).

C. Hanger rods and attachment hardware shall be powder coated to match canopy.

D. Decking and fascia shall be extruded aluminum, alloy 6063-T6, in profile and thickness shown in current Mapes brochures.

2.4 FABRICATION, GENERAL

A. All connections shall be mechanically assembled utilizing 3/16-inch fasteners with a minimum shear stress of 350 lb. Pre-welded or factory-welded connections are not acceptable.

B. Decking shall be designed with interlocking extruded aluminum members with mechanical fasteners field applied to provide structural integrity for the completed assembly.

C. Concealed drainage. Water shall drain from covered surfaces into integral fascia gutter and directed to the rear for ground level discharge via one designated downspouts.

2.5 ALUMINUM FINISHES

A. Manufacturer's standard Baked-Enamel finish.

1. Color: White.

PART 3 - EXECUTION

3.1 INSPECTION

A. Confirm that surrounding area is ready for the canopy installation.

B. Installer shall confirm dimensions and elevations to be as shown on drawings provided by Mapes Industries.

C. Erection shall be performed by an approved installer and scheduled after all concrete, masonry and roofing in the area is completed.

3.2 INSTALLATION

A. Installation shall be in strict accordance with manufacturer's shop drawings. Particular attention should be given to protecting the finish during handling and erection.

3.3 CLEANING

A. After installation, entire system shall be left in a clean condition.

END OF SECTION

SECTION 107516

GROUND-SET FLAGPOLES

PART 1 - GENERAL

1.1 SUMMARY

A. Scope of Section: Provide aluminum flagpole as shown on drawing and as specified herein, with components as needed for a complete installation.

B. Owner-Furnished Material: Flags.

1.2 ACTION SUBMITTALS

A. Product Data: For each type of product.

1. Include construction details and manufacturer's technical data, including material descriptions, dimensions of individual components and profiles, operating characteristics, fittings, accessories, finishes for flagpoles and standard installation instructions.

1.3 DELIVERY, STORAGE, AND HANDLING

A. Spiral wrap flagpoles with heavy paper and enclose in a hard fiber tube or other protective container. Store bare flagpoles in a dry location, protected from the weather and moisture, as recommended by the manufacturer.

PART 2 - PRODUCTS

2.1 MANUFACTURERS

A. Source Limitations: Obtain flagpoles as complete units, including fittings, accessories, bases, and anchorage devices, from single source from single manufacturer.

B. ACCEPTABLE MANUFACTURERS

Eder flag Manufacturing Company, Inc., Pole-Tech Company Inc., Ewing Flagpoles, or an approved equivalent manufacturer.

2.2 PERFORMANCE REQUIREMENTS

A. Structural Performance: Flagpole assemblies, including anchorages and supports, shall withstand design loads indicated within limits and under conditions indicated.

1. Wind Loads: Determine according to NAAMM FP 1001-07. Basic wind speed for Project location is 100 mph.

2. Base flagpole design on nylon or cotton flags of maximum standard size suitable for use with flagpole or flag size indicated, whichever is more stringent.

2.3 ALUMINUM FLAGPOLES

A. Aluminum Flagpoles: Cone-tapered flagpoles fabricated from seamless extruded tubing complying with ASTM B 241/B 241M, Alloy 6063, with a minimum wall thickness of 3/16 inch.

B. Exposed Height: Between 23 and 25 feet.

C. Construct flagpoles in one piece.

D. Pivoting Tilt Base: Steel baseplate with channel or rectangular tube uprights, pivot bolt, and locking device for tilting flagpole. Furnish tilting flagpole with steel counterweight box and weights, or furnish with internal counterweight. Furnish base with anchor bolts.

1. Finish: Same as flagpole.
2. Furnish ground spike.

2.4 FITTINGS

A. Finial Ball: Flush-seam ball, sized as indicated or, if not indicated, to match flagpole-butt diameter.

1. 5” – 14 gauge spun aluminum with gold anodic finish.

B. External Halyard: Ball-bearing, nonfouling, revolving truck assembly of cast metal with continuous 5/16-inch- (8-mm) diameter, braided polypropylene halyard and 9-inch (228-mm) cast-metal cleat with fasteners. Finish exposed metal surfaces to match flagpole.

1. Halyards and Cleats: One at each flagpole.
2. Halyard Flag Snaps: Bronze swivel snap hooks with neoprene or vinyl covers. Furnish two per halyard.

2.5 MISCELLANEOUS MATERIALS

A. Concrete: Comply with requirements of Section 033000 – Cast-In-Place Concrete.

2.6 ALUMINUM FINISHES

A. Natural Metal Finishes General: Comply with National Association of Architectural Manufacturers’ (NAAMM) “Metal Finishes Manual for Architectural and Metal Products” for recommendations for applying and designating finishes.

B. Satin Finish: AA-M33, fine, directional, medium satin polish; buff complying with AA-M20; seal aluminum surfaces with clear, hard-coat wax.

PART 3 - EXECUTION

3.1 PREPARATION

A. Foundation Excavation: Excavate to neat clean lines in undisturbed soil. Remove loose soil and foreign matter from excavation and moisten earth before placing concrete. Place and compact drainage material at excavation bottom.

B. Provide forms where required due to unstable soil conditions and for perimeter of flagpole base at grade. Secure and brace forms to prevent displacement during concreting.

C. Anchor Bolts: Locate and secure anchor bolts in forms with templates and brace to prevent displacement during concreting.

D. Place concrete, as specified in Section 033000 – Cast-In-Place Concrete. Compact concrete in place by using vibrators. Moist-cure exposed concrete for no fewer than seven days or use nonstaining curing compound.

E. Trowel exposed concrete surfaces to a smooth, dense finish, free of trowel marks, and uniform in texture and appearance. Provide positive slope for water runoff to perimeter of concrete base.

3.2 FLAGPOLE INSTALLATION

A. General: Install flagpoles where indicated and according to manufacturer's written instructions.

B. Baseplate: Cast anchor bolts in concrete foundation. Install baseplate with support channels on washers placed over leveling nuts on anchor bolts.

C. Install hardware and halyard on pole, secure flagpole to support channels, and install counterweight per manufacturer’s instructions.

D. Adjust until flagpole is plumb. After flagpole is plumb, tighten retaining nuts and fill space under baseplate solidly with nonshrink, nonmetallic grout. Finish exposed grout surfaces smooth and slope 45 degrees away from edges of baseplate.

END OF SECTION

SECTION 110000

MISCELLANEOUS EQUIPMENT

PART 1 - GENERAL

1.1 RELATED DOCUMENTS

A. Drawings and general provisions of the Contract, including General and Supplementary Conditions and Division 01 Specification Sections, apply to this Section.

1.2 SUMMARY

A. Section Includes:

1. Emergency defibrillator cabinet.
2. High-security Knox Box.

1.3 ACTION SUBMITTALS

A. Product Data: For each type of product indicated. Include operating instructions, dimensions, furnished accessories, and finishes.

PART 2 - PRODUCTS

2.1 EMERGENCY DEFIBRILLATOR CABINET

A. Basis of Design Product: Subject to compliance with requirements, provide products by Modern Metal products (as distributed by nwmedicalsolutions.com); Semi-recessed AED Cabinet with alarm, Item # NWHS00122, or comparable product by one of the following:

1. JL Industries.
2. Larsens Manufacturing Co.
3. Potter-Roemer.

B. Cabinets:

1. Tub Construction: Epoxy finished cold-rolled sheet steel.
2. Configuration: Semi-recessed type
3. Size:

   a. Outer Dimensions: 17-1/2” x 17-1/2” x 6-3/4”
   b. Inside Dimensions: 14” x 14” x 6-3/4”

4. Trim Type: Rolled trim compatible with glazed door panel. White epoxy finish.
5. Door: Alarmed with 9-volt battery alarm and alarm deactivation switch.
6. Door Glazing: Polycarbonate with graphics
7. Cabinet Mounting Hardware: Appropriate to cabinet.

2.2 HIGH SECURITY KEY BOX

A. Basis of Design Product: Subject to compliance with requirements, provide Knox Company; Knox-Box 3200 Series, or comparable product by one of the following:

1. JL Industries.
2. Larsens Manufacturing Co.
3. Potter-Roemer.

B. Provide recessed mount box (with hinged door), with the following features:

1. 1/4” plate steel housing, 1/2” thick steel door, with interior gasket seal and stainless-steel door hinge.
2. Box and lock UL-Listed. Lock to have 1/8” thick stainless-steel dust cover with tamper seal mounting capability.
3. Exterior Dimensions: Recessed mount flange 7"H x 7"W
4. Lock: UL Listed. Double-action rotating tumblers and hardened steel pins accessed by biased cut key.
5. Finish: Knox-Coat proprietary finishing process.
6. Colors: Aluminum.
7. Recessed Mounting Kit (RMK).

PART 3 - EXECUTION

3.1 INSTALLATION

A. Install units in accordance with manufacturer’s installation instructions.

B. Install units plumb and level in wall openings; height as required by code.

C. Secure rigidly in place

END OF SECTION

SECTION 114000

FOODSERVICE EQUIPMENT

PART 1 - GENERAL

1.1 DESCRIPTION

A. Scope: Furnish all labor, materials, services, equipment and appliances required to provide and deliver all foodservice equipment hereinafter specified into the building, uncrate, assemble, hang, set-in-place, level, and completely install, exclusive of final utility connections.

B. Related Work Specified Elsewhere:

1. All plumbing, electrical and ventilating work required in conjunction with commercial foodservice equipment including rough-in to points indicated on mechanical drawings, and final connections from rough-in points, electrical service to points of connection and final connections shall be by Divisions 22, 23 and 26.
2. Refrigeration work will be done by the Kitchen Equipment Contractor except for electrical connections to and between compressors, blower coils, controls, etc. These final connections shall be by Divisions 22 and 26.
3. All traps, steam traps, grease traps, line strainers, tail pieces, valves, stops, shut-offs, and fittings necessary for equipment specified will be furnished and installed under mechanical contract by Division 22 unless specifically called for otherwise under each item.
4. All line and disconnect switches, safety cut-offs and fittings, convenience boxes or other electrical controls, fittings and connections will be furnished and installed under electrical contract by Division 26, unless specifically indicated otherwise in the item specifications. Starting switches for certain specified pieces of foodservice equipment are to be provided by Kitchen Equipment Contractor. Those starting switches, if furnished loose as standard by Foodservice Manufacturers (other than fabricated items), shall be mounted and wired complete under Division 26.
5. Any sleeves or conduit required for refrigeration, syrup tubing, or carbonation tubing will be furnished and installed under Division 22.
6. Unless specifically called for in the Item Specifications, ventilating fans and all duct work between same and ceiling rough-in openings, and from same to discharge opening in building will be furnished and installed by Division 22.

1.2 DEFINITIONS

A. All references to the terms "Contractor", "Kitchen Equipment Contractor", or "K.E.C." in the specifications and/or on the drawings shall be defined to mean the Kitchen Equipment Contractor.

B. All references to the term "Owner" in the specifications and/or on the drawings shall be defined to mean the Owner or Owner's designated representative and the Foodservice Equipment Consultant.

C. All references to the term "Consultant" or "Foodservice Equipment Consultant" in the specifications and/or on the drawings shall be defined to mean **NYIKOS ASSOCIATES, INC.** its employees, and authorized representatives and is referred to throughout the contract documents as if singular in number and masculine in gender.

D. The phrase "The K.E.C. shall" or "by the K.E.C.", as applicable, is understood to be included as a part of each sentence, paragraph or article of these specifications unless otherwise indicated or specified.

1.3 QUALITY ASSURANCE

A. Qualification of Suppliers:

1. Commercial foodservice equipment suppliers shall submit satisfactory evidence of compliance with the following qualifications and conditions to be approved.

a. Successful completion of jobs of comparable scope.
b. Have manufacturer's authorization to distribute and install specified factory items of equipment.
c. Maintain a permanent staff experienced in the installation of foodservice equipment and preparation of professional style rough-in drawings and brochures.
d. Maintain or have access to fabrication shop meeting N.S.F. requirements. If other than foodservice equipment suppliers own fabrication shop, obtain Consultant approval of fabrication shop desired to be used.
e. Maintain or have access to a readily available stock of repair and replacement parts, together with authorized service personnel.

B. Qualification of Fabricators:

1. Fabricators shall be an N.S.F. approved organization with trained personnel and facilities to properly design, detail and fabricate equipment in accordance with the specifications and standard details contained herein.
2. Custom fabricated equipment shall bear the National Sanitation Foundation seal of approval and listed as such under N.S.F. Standards No. 2 and No. 33.
3. Only one (1) fabricator shall be used for this project, and all equipment will be fabricated at the same shop. Where units cannot be fully shop-fabricated, complete fabrication at project site.
4. Acceptable fabricators are:

a. Pro Stainless, Inc.; Keyser, WV
b. Commercial Stainless, Inc.; Bloomsburg, PA
c. Keystone Custom Fabricators, Inc.; Elizabeth, PA
d. Southern Equipment Fabricators, Inc.; Columbia, SC
e. Stainless Unlimited, Inc., Waldorf, MD
f. Other fabricators, as approved by Consultant.

C. Qualification of Manufacturers:

1. Manufacturers shall be regularly engaged in the production of items furnished and shall have demonstrated the capability to furnish similar equipment that performs the functions specified or indicated herein.

D. Standard Products:

1. Materials, products, and equipment furnished under this contract shall be the standard items of manufacturers regularly engaged in the production of such materials, products, and equipment and shall be of the manufacturer's latest design that complies with the specifications which have been produced and used successfully on other projects and in similar applications.
2. Discrepancies within contract documents should immediately be brought to the attention of the Consultant in writing for clarification prior to fabrication or ordering of standard items.

1.4 PLANS & SPECIFICATIONS

A. Specifications and drawings have been prepared to form the basis for procurement, erection, start-up and adjustment of all equipment in this contract. Plans and specifications shall be considered as mutually explanatory and work required by one, but not the other, shall be performed as though required by both. Items required by one, but not by the other shall be provided as though required by both. Work shall be accomplished as called for in specifications and shown on drawings, so that all items of equipment shall be completely functional for purpose for which they were designed. When there is any discrepancy between drawings and specifications, drawings shall govern. Bidders should seek clarification of any discrepancies from the Consultant prior to bidding.

1.5 SUBMITTALS

A. General Requirements:

1. Within six (6) weeks or earlier, as required, assemble and submit all shop drawings, rough-in drawings, brochures, color samples, etc. as a complete package. There will be no review of partial submittals.
2. Any and all costs, to all trades and parties involved, arising from delay of project due to non-submittal of the complete package by the K.E.C. within a reasonable time period shall be borne solely by the K.E.C.
3. Identify each submittal by project name, date, contractor, submittal name, and any other necessary information to distinguish it from other submittals.

B. Shop Drawings:

1. Submit shop drawings electronically in PDF format, drawn on sheets equal in size to Contract Documents of equipment specified for custom fabrication including all accessories attached to each item.
2. Drawings shall be detailed and fully dimensioned to a minimum scale of 3/4"=1'-0" for plan and elevation views, and 1-1/2"=1'-0" for sections, based on the floor plan(s) and following item specifications. Drawings will be checked for thoroughness, accuracy, completeness, neatness, and returned for corrections, if necessary.

C. Rough-in Drawings:

1. Submit rough-in drawings electronically in PDF format, drawn on sheets equal in size to Contract Documents of detailed arrangement plans professionally prepared from architects dimensioned plans (not traced from Contract Documents) at a minimum scale of 1/4"=1'-0".
2. Equipment Layout Plan showing arrangement of all items specified and identified on schedule of equipment listing item number, description, quantity, manufacturer, model number, and remarks.
3. Ventilation Plan showing dimensioned locations of all duct openings for ventilators and dishmachines identifying size, c.f.m. required (exhaust and supply), static pressures, and connection heights.
4. Plumbing/Electrical Plans showing dimensioned locations, sizes, elevations and capacities of all utility services required for each item of equipment in relation to finished walls, columns, and heights above finished floor.
5. Special Conditions Plan showing exact dimensions and details of all masonry bases, floor depressions, critical partition locations/heights, wall openings, reinforcing for wall and/or ceiling mounted equipment, and conduit locations for soda and compressed gas lines.

D. Equipment Brochures:

1. Submit electronic files in PDF format of manufacturer's illustrations and technical data for approval prior to procurement. All items of Standard Manufacture shall be submitted, including items purchased to be built into fabricated equipment. Each illustration shall be

marked to accurately describe the item to be furnished as specified. Include all deviations from standard information (i.e., voltage, phase, load, etc.).

2. Include a separate information sheet ahead of each illustration sheet showing all service connection sizes, electrical requirements, loads, consumptions, and all accessories specified.
3. Manufacturer's suggested schematic drawings for connection of mechanical and electrical services for such items as booster heaters, disposers, or any other item of equipment that may require the same.

E. Miscellaneous Shop Drawings:

1. Submit electronic files in PDF format of manufactured equipment specified requiring clarification and approval such as, walk-in cooler/freezer drawings, ventilator drawings, utility raceway drawings, and refrigeration system drawings.

F. Operation and Maintenance Manuals:

1. Submit electronic files in PDF format for all mechanically operated equipment of standard manufacture. Include operating and cleaning/maintenance instructions, parts listing, recommended parts inventory listing and purchase source, copy of warranties, and similar applicable information.
2. Brochure covers shall bear the job name, date, and name of contractor.

G. Manufacturer's List:

1. The K.E.C. shall submit electronic files in PDF format a list of all manufacturer's representatives of the food service equipment such as convection ovens, ranges, etc., and their authorized service agencies' addresses and telephone numbers; to be presented after submission of manufacture data.

H. Samples:

1. Samples of materials, products, and fabrication methods, shall be submitted for approval upon request at no additional cost, before proceeding with work.

I. Re-submission Requirements:

1. Shop Drawings:

   a. Revise initial drawings as required and resubmit in accordance with submittal procedures.
   b. Indicate on drawings all changes which have been made in addition to those requested by Consultant.

2. Product Data and Samples:

   a. Submit new data and samples as required for initial submittal.
   b. Make all re-submittals within fourteen (14) working days from date of Consultants previous action.

J. Approvals:

1. After approval of the submittals listed above, furnish as many prints and copies as are required for the various trades, the Owner, the Architect, and the Consultant.
2. The approval of the shop drawings will be general and shall not relieve the K.E.C. of responsibility for proper fitting, finishing, quantities, and erection of work in strict accordance with the contract requirements, nor does it relieve him of the responsibility of furnishing material and workmanship not indicated on approved shop drawings but required for the completion of his work.

3. Approval by the Consultant and/or Owner of the manufacturer's data submitted by the K.E.C. does not waive the responsibility of K.E.C. to furnish each item of equipment in complete compliance with the specifications and drawings. Discrepancies between Contract Documents and furnished equipment shall be corrected even after approval and installation of this equipment at no additional cost to the Owner.

1.6 PRODUCT DELIVERY, STORAGE AND HANDLING

A. Delivery:

1. Equipment shall be delivered to the job site only after the building is weather-safe and vandal-safe.

B. Storage:

1. Store equipment in an area convenient to the point of installation in such a way that it can be protected from the weather and job hazards.

C. Protection:

1. Wrapping and protective coatings shall remain on all items until ready for use and in the case of stainless steel items, until installation is complete and the job is ready for cleaning.
2. Existing equipment not scheduled for removal but to remain within the construction area shall be wrapped with protective plastic and/or padding to prevent damage and shall remain on all items until installation is complete and the job is ready for cleaning.

D. Damage:

1. All responsibility shall rest with the K.E.C. for any damage or loss incurred prior to final acceptance. Such items as may be lost or damaged shall immediately be replaced or repaired to a new condition to the complete satisfaction of and at no additional cost to the Owner.

1.7 JURISDICTION TRADE AGREEMENTS AND RESTRICTIONS

A. Include the work specified, shown or reasonably infer able as part of foodservice equipment. Portions of this work may be subcontracted to those qualified to do such work, as may be necessary because of jurisdictional trade agreements and restrictions.

1.8 REGULATIONS AND CODES

A. Except as otherwise indicated, each item of equipment shall comply with the latest current edition of the following standards as applicable to the manufacture, fabrication, and installation of the work in this section.

1. N.S.F. Standards: Comply with National Sanitation Foundation Standards and criteria, and provide N.S.F. "Seal of Approval" on each manufactured item and major items of custom-fabricated work.
2. U.L. Standards: For electrical components and assemblies, provide either U.L. labeled products or, where no labeling service is available, provide a complete index of the components used as selected from the U.L. "Recognized Component Index".
3. A.N.S.I. Standards: For gas-burning equipment, comply with A.N.S.I. Z21-Series standards. Comply with A.N.S.I. B57.1 for compressed gas cylinder connections and with applicable standards of the Compressed Gas Association for water connection air gaps and vacuum breakers.

4. A.G.A.: All gas-fired equipment shall be A.G.A. Approved, equipped to operate on the type gas available at the job site and shall contain 100% automatic safety shut-off devices.
5. N.F.P.A. Standards: Comply with N.F.P.A. Bulletin 96 for exhaust systems and with N.F.P.A. Bulletins 17, 17A & 96 and U.L. 300 for fire extinguishing systems.
6. A.S.M.E. Code: Comply with A.S.M.E. boiler code requirements for steam generating and steam heated equipment. Provide A.S.M.E. inspection, stamps, and certification of registration with National Board.
7. National Electric Code: Comply with N.E.C. Volume 5 for electrical wiring and devices included with foodservice equipment.
8. All authorities having jurisdiction over this type of equipment and/or installation.
9. Where specifications and/or drawings require mechanical, electrical or refrigeration work to be performed, such work shall be done in strict conformance to other portions of the Base Building Specification which sets forth standards for this type of work.
10. Where there exists two standards or codes for one type of work, the stricter method shall govern.

1.9 WARRANTIES

A. Warrantee in writing all equipment and fabrication against defects and workmanship for a period of two (2) years from date of acceptance.

1. Each piece of mechanical equipment shall be listed, together with the authorized service and repair agency whom the Owner will call should malfunctions occur within the two-year (2) guarantee period.

B. Refrigeration system compressors shall be warranted for five (5) years by the manufacturer. Free refrigeration service, including parts and labor, shall be furnished for two (2) years from date of acceptance.

1.10 JOB CONDITIONS

A. Visit the job site to field check actual wall dimensions and roughing-in and shall be responsible for fabricating and installing the equipment in accordance with the available space and utility services as they exist on the job site.

B. Check all door openings, passageways, elevators, etc., to be sure that the equipment can be conveyed to its proper location within the building and if necessary, check the possibility of holding wall erection, placement of doorjambs, windows, etc. for the purpose of moving the equipment to its proper location with the Contractor. Any removal and rebuilding of walls, partitions, doorjambs, etc. necessary to place the equipment, or if caused by incorrect information on the Contractor's drawings, shall be done at the expense of the K.E.C., at no additional cost to the Owner.

C. Notify the Consultant and Owner before fabrication of equipment of any discrepancies between plans and specifications and actual conditions on the job.

D. Before finished floors, walls, and/or ceilings are in place, physically check the location of all "rough-ins" at the job site. Report discrepancies in writing.

E. Any changes required after fabrication has been started to ensure equipment accurately fitting the space as it exists and conforming to actual field dimensions on the job shall be made at no additional cost to the Owner.

F. If special hoisting equipment and operators are required, include such cost as part of the bid for this work.

1.11 CHANGES IN THE WORK

A. The Owner reserves the right to require reasonable modification to be made in the routing of work and relocation of equipment. This specifically refers to conditions where interference occurs or where more desirable accessibility can be obtained or whose materials cannot be installed because of structural or mechanical conditions encountered. Such changes shall be made at no additional cost to the Owner.

1.12 PATENTS

A. Hold harmless and save the Owner and its officers, consultants, servants and employees from liability of any nature or kind, including costs and expenses for or on account of any copyrighted, patented, or un-patented invention, process, trademark, design, device, material, article, or appliance manufactured or used in the performance of the contract, including its use by the Owner, unless otherwise specifically stipulated in the Contract Documents.

B. If the Contractor has information that the process or article specified is an infringement of a patent, he shall be responsible for such loss unless he promptly gives such information to the Owner in writing. The contract price shall include all royalties or costs arising from the use of any or all of the above which are, in any way, involved in the contract.

1.13 CONTRACTOR'S WARRANTY

A. The Contractor represents and warrants:

1. That he is financially solvent and that he is experienced in and competent to perform the types of work or to furnish the plans, materials, supplies or equipment, to be so performed or furnished by him.
2. That he is familiar with all Federal, State, municipal, and department laws, ordinances, orders, and regulations, which may, in any way, affect the work of those employed therein, including, but not limited to, any special acts relating to the work or to the project of which it is a part.
3. That such temporary and permanent work required by the contract as is to be done by him can be satisfactorily constructed and used for the purpose for which it is intended and that such construction will not injure any person or damage any property.
4. That he has carefully examined the plans, specifications, addenda, if any, and the site of the work and that, from his own investigations, he has satisfied himself as to the nature and location of the work, the character, quality, and quantity of materials likely to be encountered, the character of equipment and other facilities needed for the performance of the work, the general and local conditions, and all other materials which may, in any way, affect the work or its performance.
5. That he has satisfied himself as to the existing openings and accesses to the foodservice area through which his equipment shall be required to pass and that he is responsible for his equipment being delivered in as many sections as necessary to conform to the available space dictated by these existing limitations.

1.14 SUBSTITUTIONS

A. Bids submitted shall be for the specific manufacturer and model, size, capacity, and accessories, as specified or shown on the drawings.

B. The K.E.C. may quote upon brands and models of equipment other than those specified as a substitute. In the event that it is desired to request approval of substitute material, product, article, process, or item of equipment in lieu of that which is specified, submit a written request at least (10) working days prior to date of bids, setting forth the proposed substitution in detail, including an itemized analysis of the addition or deduction in the amount of the contract, if any,

which will result if the substitution is approved. Each such request shall include a complete description of the proposed substitute, the name of the material or equipment for which it is to be substituted, drawings, cuts, performance and test data and any other data or information necessary for a complete evaluation. If approved, bidders will be notified in the form of addendum.

C. The Contractor shall be held responsible for additional costs to himself or any other prime contractor for changes required to install materials, devices, equipment, etc., which the Contractor has substituted for that specified.

D. The Owner reserves the right to award a contract or contracts based upon the inclusion or exclusion of one or more of the alternate estimates. The description of all workmanship and materials under the various headings of the specifications shall have the same meaning and force when applied to similar workmanship and materials in the alternate. If the descriptions are not specific, the workmanship shall be the best quality and the materials the best commercial grade.

E. Whenever any product is specified in the Contract Documents by reference to the name, trade name, make, or catalog number of any manufacturer or supplier, the intent is not to limit competition but to establish a standard of quality which is necessary for the project. Products of other manufacturers meeting the established criteria will be considered. However, please take note that the plumbing, electrical, steam, heating, ventilating, and air-conditioning drawings prepared by the consulting engineers, have been engineered based on the first product named under each item number designation. Therefore, any other product which is submitted for approval in lieu of the primary item specified, shall conform to the rough-in requirements established for the first product named, as well as physical size and building construction requirements.

F. Any equipment listed which is not in accordance with the provisions of these specifications will be rejected. If the Contractor fails to submit for approval within the specified time the list of equipment as required herein, the Consultant shall then have the right to make the final equipment selection. The selection made by the Consultant shall strictly conform to these specifications and will be final and binding, and the items shall be furnished and installed by the Contractor without change in the contract price at the time of completion.

G. G.It shall be the responsibility of the K.E.C. to prove that substitutions are equal to specified items. **NYIKOS ASSOCIATES, INC.** as the Owner's representative, shall be the determining authority as to the acceptability or equality of the substitutions. <u>No substitutions shall be approved after bids are received</u>.

1.15 DESIGN/MODEL CHANGE, DISCONTINUED ITEMS

A. All equipment specified shall be of latest design. Any improvements made in design and construction of prefabricated items before equipment is actually delivered to the project site, shall be incorporated in equipment, at no additional cost, provided such incorporation does not delay delivery date of equipment.

B. In the event of an item being discontinued after specified and prior to delivery to project site, the K.E.C. shall be responsible for notifying the Consultant in writing of the discontinued item and request an alternate of equal performance, including all accessories, at no additional cost to the Owner.

PART 2 - PRODUCTS

2.1 GENERAL

A. The equipment and its component parts shall be new and unused. All items of standard manufactured equipment shall be current models at the time of delivery. All parts subject to wear, breakage, or distortion shall be accessible for adjustment, replacement, and repair.

B. Means shall be provided to ensure adequate lubrication for all moving parts. All oil holes, grease fittings, and filler caps shall be accessible without the use of tools.

C. The design of the equipment shall be such as to provide for safe and convenient operation. Covers or other safety devices shall be provided for all items of equipment presenting safety hazards. Such guards or safety devices shall not present substantial interference to the operation of the equipment. All guards shall provide easy access to the guarded parts.

D. Trim shall not be an acceptable substitute for accuracy and neatness. When trim is required and accepted by the Consultant and the Owner in lieu of rejection of items of equipment, it shall be the K.E.C.'s responsibility to provide same at no additional cost.

E. Unless otherwise specified herein, no material lighter than #20 gauge shall be incorporated into the work. All gauges for sheet iron and sheet steel shall be U.S. Standard Gauges, and finished equipment gauge thickness shall not vary more than 5% plus or minus from the thickness indicated below.

GAUGE	THICKNESS	GAUGE	THICKNESS
#10	0.1406	#16	0.0625
#12	0.1094	#18	0.0500
#14	0.0781	#20	0.0375

F. Materials or work described in words which have a well-known and acceptable trade meaning shall be held to refer to such accepted meanings.

2.2 MATERIALS

A. Refrigeration Systems:

1. Self-contained:

a. Whether the units be top-mounted or cabinet-mounted, they shall be started by the K.E.C. and shall be tested for maintenance of temperature.
b. All units shall be furnished with condensate evaporators.

2. Remote: Provide and install complete refrigeration system(s), charged, started, and operating properly, according to the Item Specifications and the following.

a. Single stage compressors with air-cooled condensers operating within the recommended range of suction discharge pressure of economical operation and within the required capacity.
b. All units shall be new and factory assembled, to operate with the refrigerant specified. Refrigerant R-404A shall be used for all medium and low temperature applications. Due to the unsettled nature of refrigerants, no refrigerant shall be used with a phase-out date of less than ten (10) years from the date of installation.
c. Compressors shall be accessible hermetic type, Copeland or approved equal, and shall be equipped with high-low pressure control, liquid line drier, sight glass, suction and discharge vibration eliminator, and head pressure control.

d. The system shall have a factory mounted and pre-wired control panel complete with main fused disconnect, compressor circuit breakers, contactors, and time clocks wired for single point power connection.
e. The supporting frame shall be constructed of structural steel, fully welded, and protected against rust and corrosion with one (1) coat primer, and two (2) coats paint, unless otherwise specified.
f. Systems specified for outdoor installation shall be fully protected in a weather-proofed housing with louvered front panel and hinged top, constructed to resist rust and corrosion, and furnished with low ambient controls. Crankcase heater shall be provided with every compressor.

3. Where specifications call for pre-piped lines (i.e., from a fixture to a valve compartment, etc.), provide such work in strict conformance with other sections of the specifications which set forth standards for this type of work or in conformity with the requirements of the Board of Fire Underwriters or ASHRAE Standards, whichever is greater.

4. Each refrigeration item specification is written to provide minimum specifications and scope of work. All refrigeration equipment shall be designed and installed to maintain the following general temperatures unless otherwise specified.

TYPE		REFRIGERATORS	FREEZERS
a.	Walk-In	+35º F./1.7º C.	-10º F./-23.3º C.
b.	Reach-In	+35º F./1.7º C.	-10º F./-23.3º C.
c.	Undercounter	+35º F./1.7º C.	-10º F./-23.3º C.
d.	Fabricated	+35º F./1.7º C.	-10º F./-23.3º C.
e.	Cold Pans	+0º F./-17.8º C.	
f.	Work Rooms	+50º F./10º C.	

5. Provide (including payment if subcontracted) all electrical and refrigeration components needed by the completed system and complete (or have completed by the respective trades) all connections of and to said components.
6. An evaporator coil defrost system shall be provided and installed by the K.E.C. on all refrigeration systems designed to operate at an evaporator coil temperature of less than +35º F. Evaporator coil units provided without electric defrost feature shall be installed with a solenoid valve in the liquid line, controlled by the time clock so as to shut off the flow of refrigerant and allow the compressor to pump down and shut off by activation of the pressure control switch.
7. Verify the requirements of and provide any or all additional refrigeration specialty(s) or component(s) required or recommended by the manufacturer for proper operation under the specific operating conditions and location of each system specified.
8. Verify and provide manufacturer's certification that the equipment selection hereinafter specified for each refrigeration system is properly sized and shall meet the operating requirements set forth for each system regarding maintaining specified operating temperature, hours of compressor running time, and system pressures and velocities as recommended by the equipment manufacturer(s).
9. All refrigeration systems shall be installed and wired in strict conformance with the manufacturer's instructions and recommendations.

B. Motors and Heating Elements:

1. Motors up to and including 1/2 HP shall be wired for 120 volt, single phase service. Motors larger than 1/2 HP shall be wired for 208 volt, single or three phase service as indicated. Motors shall be of the drip-proof, splash-proof, or totally enclosed type, having a continuous duty cycle and ball bearings, except small timing motors which may have sleeve bearings. All motors shall have windings impregnated to resist moisture. Motors located where subject to deposits of dust, lint, or other similar matter shall be of the totally enclosed type. Motors shall have ample power to operate the machines for which designated under full load operating conditions without exceeding their nameplate ratings. Insulation shall be N.E.M.A. Class B or better.

2. Heating elements having a connected load up to and including 1,000 watts shall be wired for 120 or 208 volt, single phase service, or as indicated on the drawings.

    a. Any heating element larger than 1,000 watts or any combination of elements in one fixture totaling more than 1,000 watts shall be wired for 208 volt single or three phase service, as indicated on the drawings.
    b. Fixtures having multiple heating elements may be wired for three phase service with the load balanced as equally as possible within the fixture.

C. Switches and Controls:

1. Provide recognized commercial grade signals, "on-off" pushbuttons or switches, and other speed and temperature controls as required for operation of each item, complete with pilot lights and permanent graphics, conspicuously labeled, to assist the user of each item.
2. Mount switches and controls directly adjacent the piece of equipment for which it involves, on operator's side of counter body apron, out of view to the public.
3. Provide on or for each motor-driven appliance or electrical heating or control unit, a suitable control switch or starter of the proper type and rating and in accordance with Underwriter's Code wherever such equipment is not built in. All other line switches, safety cut-outs, control panels, fuse boxes, other control fittings and connections, when not an integral part of the unit or furnished loose by the manufacturer will be furnished and installed by the Electrical Contractor, unless otherwise specified. All electrical controls, switches, or devices provided loose for field installation as a part of the item specified shall be installed in the field by the Contractor unless otherwise specified.
4. Appliances shall be furnished complete with motors, driving mechanisms, starters, and controllers, including master switches, timers, cut-outs, reversing mechanisms, and other electrical equipment if and as applicable.

D. Cover Plates:

1. All controls mounted on vertical surfaces of fixtures shall be set into recessed die stamped stainless steel cups, or mounted onto removable cover plates in such a fashion as to not protrude or interfere with the operation of each item.
2. Cover plates shall be furnished and installed for all electrical outlets, receptacles, switches and controls furnished by the K.E.C., and shall match the material and finish of the equipment to which they will be fastened.

E. Wiring and Conduit:

1. Wiring shall be properly protected in N.E.M.A. and U.L. approved metal enclosures. Only rigid steel conduit shall be used, zinc coated where unexposed and <u>chrome plated where exposed</u>. All wiring shall be run concealed wherever possible.
2. All equipment furnished under this contract shall be so wired, wound, or constructed so as to conform with the electrical characteristics at the job site.
3. Wiring and connection diagrams shall be furnished with electrically operated machines and for all electrically wired fabricated equipment.
4. Furnish all foodservice equipment completely wired internally using wire and conduit suitable for a wet location. Where an Electrician's services are required, the work shall be done in the K.E.C.'s factory or at his expense at the job site at no additional cost to the Owner. Provide all electrical outlets and receptacles required to be mounted on or in fabricated equipment and interconnect to a master circuit breaker panel with all wires neatly tagged showing item number, voltage characteristics, and load information. Final connection shall be made by the Electrical Contractor.

F. Cords, Plugs, and Receptacles:

1. The Electrical Contractor shall provide three- or four-wire, grounding-type receptacles for all wall and floor mounted outlets to be used for plug-in equipment with characteristics as noted on the drawings. Provide Hubbell three-wire or four-wire grounding-type

connectors and neoprene cords installed on each item of plug-in equipment, as indicated on drawings and item specifications.

2. K.E.C. shall coordinate with the Electrical Contractor so that the receptacles provided will match the specific plugs provided as part of the plug-in equipment. Any changes in cords and plugs required in the field due to lack of coordination between the Electrical Contractor and the K.E.C. shall be the latter's responsibility.
3. Reduce the length of all cords furnished with the specified equipment to a suitable or appropriate length so they do not interfere with other equipment or operations.
4. Pedestal receptacles that are part of fabricated equipment exposed to view, shall be similar to T&S Model #B-1508DD single face, single gang or Model #B-1528DD single face, double gang.

G. Water Inlets:

1. Water inlets shall be located above the positive water level wherever possible to prevent siphoning of liquids into the water supply system. Wherever conditions shall require a submerged inlet, a suitable type of check valve (except in jurisdictions where check valves are prohibited) and vacuum breaker shall be placed on the fixture to form a part of same to prevent siphoning. Where exposed to view, piping and fittings shall be chrome-plated.

H. Drain Lines:

1. Plumbing Contractor shall provide and install indirect waste lines from equipment which will discharge into floor drains or safe wastes in accordance with Plumbing Rough-In Plans, chrome-plated where exposed. Extend to a point at least 1" (or as required by local codes) above the rim of the floor drain, cut bottom on 45º angle and secure in position.
2. All horizontal piping lines shall be run at the highest possible elevation and not less than 6" above finished floor, through equipment where possible.
3. No exposed piping in or around fixtures or in other conspicuous places shall show tool marks of more than one thread at the fitting.
4. All steam operating valves on or in fabricated and purchased foodservice equipment shall be provided with composition hand wheels, which shall remain reasonably cool in service.
5. Provide suitable pressure regulating valves for all equipment with such components that might reasonably be expected to be affected over a period of time by adverse pressure conditions.

I. Faucets, Valves and Fittings:

1. All sinks shall be fitted with chromium plated, swing spout faucets of same manufacturer throughout as follows, or otherwise specified in Item Specifications.

   a. Prep and Utility Sinks:
      1.) Splash-Mounted:
         a.) T&S Brass and Bronze Works, Inc., Model #B-231.
         b.) Fisher Manufacturing Company, Model #3253.
      2.) Deck-Mounted:
         a.) T&S Brass and Bronze Works, Inc., Model #B-221.
         b.) Fisher Manufacturing Company, Model #3313.

   b. Pot Sinks:
      1.) Splash-Mounted:
         a.) T&S Brass and Bronze Works, Inc., Model #B-290.
         b.) Fisher Manufacturing Company, Model #5214.

2. Pre-Rinse Assemblies:

   a. Splash-Mounted:

1.) T&S Brass and Bronze Works, Inc., Model #B-133 with #B-109 wall bracket.
2.) Fisher Manufacturing Company, Model #2210 with #2902-12 wall bracket.

b. Deck-Mounted:
1.) T&S Brass and Bronze Works, Inc., Model #B-143 with #B-510 mixing valve and #B-109 wall bracket.
2.) Fisher Manufacturing Company, Model #2810 with #2805-CV mixing valve and #2902-12 wall bracket.

3. Vacuum Breakers:

a. General Use:
1.) Fisher Manufacturing Company, Model #3990-8000.

b. Disposers:
1.) Splash-Mounted:
a.) T&S Brass and Bronze Works, Inc., Model #B-455.
b.) Fisher Manufacturing Company, Model #3990.
2.) Deck-Mounted:
a.) T&S Brass and Bronze Works, Inc., Model #B-456.
b.) Fisher Manufacturing Company, Model #3991.

4. Trough Inlets:

a. Fisher Manufacturing Company, Model No. #2905.

5. Other specialty faucets, pre-rinse assemblies, vacuum breakers, and trough inlets, as specified under Item Specifications.
6. All sink compartments shall be fitted with 2" NPT male, chrome-plated, brass rotary waste valves complete with overflow assemblies and stainless steel strainers.

a. Prep and General Utility Sinks:
1.) Fisher Manufacturing Company, Model #6100.

b. Pot Sinks:
1.) Fisher Manufacturing Company, Model #6102.

7. Refer to Division 22 for all other fittings.

J. Metals and Alloys:

1. Stainless steel sheets shall conform to ASTM 240, Type 302, Condition A, 18-8, of U.S. Standard Gauges as previously indicated under paragraph 2.1.E.

a. All exposed surfaces shall have a No. 4 finish. A No. 2B finish shall be acceptable on surfaces of equipment not exposed to view.
b. All sheets shall be uniform throughout in color, finish, and appearance.
c. Rolled shapes shall be of cold rolled type conforming to ASTM A36.

2. Stainless steel tubing and pipe shall be Type 304, 18-8, having a No. 4 finish, and shall conform to either ASTM A213 if seamless or ASTM A249 if welded.
3. Where galvanized metal is specified, it shall be copper-bearing galvanized iron, cold-rolled, stretcher leveled, bonderized, re-rolled to insure a smooth surface, and used in the largest possible sizes with as few joints as necessary.
4. Galvanizing shall be applied to rolled shapes in conformance with ASTM A123, and to sheets in conformance with ASTM A526, coating designation G-90.

K. Castings:

1. Castings shall consist of corrosion resisting metal (white metal) containing not less than 30% nickel. All castings shall be rough ground, polished, and buffed to bright lustre and free from pit marks, runs, checks, burrs, and other imperfections. In lieu of corrosion resisting metal castings, die-stamped or cast 18-8 stainless steel will be acceptable.

L. Hardware and Casters:

1. All hardware shall be of heavy duty type, satin finished chromium plated brass, cast or forged or highlighted stainless steel of uniform design. All hardware shall be a well-known brand, and shall be identified by the manufacturer's name and model number for easy replacement of broken or worn parts.
2. Casters on custom-built equipment shall be heavy duty type, ball bearing, solid or disc wheel, with grease-proof rubber, neoprene, or polyurethane tire. Wheel shall be 5" diameter, minimum width of tread 1-3/16", minimum capacity per caster 250 pounds, unless otherwise noted.

    a. Solid material wheels are to be provided with stainless steel rotating wheel guard.
    b. All casters shall have sealed wheel and swivel bearings, polished plated finish and be N.S.F. approved.
    c. All equipment specified with casters shall have a minimum of two (2) with brakes installed on opposite corners, unless otherwise noted.

M. Locks:

1. When specified, doors and drawers of all custom fabricated or manufactured equipment shall be provided with cylinder locks, disc tumbler type with stainless steel faceplate as manufactured by Standard-Keil Mfg. Co., or approved equal.

    a. Provide two (2) sets of keys for each lock.
    b. All locks shall be keyed alike, except at cashiers stations or unless otherwise specified.

N. Thermometers:

1. All fabricated refrigerated compartments shall be fitted with exterior mounted, adjustable, dial or digital thermometers with flush bezels, and shall be calibrated after installation.

O. Sealants:

1. Sealant, wherever required, shall conform to ASTM C 920; Type S Grade NS, Class 25, Use Nt, with characteristics that when fully cured and washed meets requirements of Food and Drug Administration Regulation 21 CFR 177.2600 and N.S.F. RTV-732 for use in areas where it comes in contact with food.
2. Dow-Corning #780 or General Electric "Silastic", or approved equal, in either clear or approved color to match surrounding surfaces and applied in accordance with sealant manufacturers recommendations for a smooth, sealed finish.

2.3 FABRICATION AND MANUFACTURE

A. Materials and Workmanship:

1. Unless otherwise specified or shown on drawings, all materials shall be new, of best quality, perfect, and without flaws. Material shall be delivered and maintained on the job in an undamaged condition.
2. Fabrication shall be equal to the standards of manufacture used by all first class equipment manufacturers, performed by qualified, efficient, and skilled mechanics of the trades involved.
3. All items of standard equipment shall be the latest model at time of delivery.

4. All fabricated work shall be the product of one manufacturer of uniform design and finish.
5. Each fabricated item of equipment shall include all necessary reinforcing, bracing, and welding with the proper number and spacing of uprights and cross members for strength.
6. Wherever standard sheet sizes will permit, the tops of all tables, shelves, exterior panels of cabinet type fixtures, and all doors and drainboards shall be constructed of a single sheet of metal.
7. Except where required to be removable, all flat surfaces shall be secured to vertical and horizontal bracing members by welding or other approved means to eliminate all buckle, warp, rattle, and wobble. All equipment not braced in a rigid manner and which is subject to rattle and wobble shall be unacceptable, and the K.E.C. shall add additional bracing in an approved manner to achieve acceptance.

B. Sanitary Construction:

1. All fabricated equipment shall be constructed in strict compliance with the standards of the National Sanitation Foundation as outlined in their Bulletin on Food Service Equipment entitled "Standard No. 2" dated October 1952, and in compliance with the local and State Public Health Regulations in which the installation will occur.
2. All fabricated equipment shall bear the N.S.F. "Seal of Approval".

C. Construction Methods:

1. Welding:

a. All welding shall be the heliarc method with welding rod of the same composition as the sheets or parts welded. Welds shall be complete, strong, and ductile with excess metal ground off and joints finished smooth to match adjoining surfaces; free of mechanical imperfections such as gas holes, pits, cracks, etc., and shall be continuously welded so that the fixtures shall appear as one-piece construction. Butt welds made by spot solder and finished by grinding shall not be acceptable.
b. Spot welds shall have a maximum spacing of 3". Tack welds shall be of at least 1/4" length, and spaced no greater than 4" from center to center. Weld spacing at the ends of the channel battens shall not exceed 2" centers.
c. In no case shall soldering be considered as a replacement for welding, nor shall any soldering operation be done where dependence is placed on stability and strength of the joint.
d. Fixtures shall be shop fabricated of one piece and shipped to the job completely assembled wherever possible. Equipment too large to transport or enter the building in one piece shall be constructed so that the field joints can be welded at the job site.
e. All exposed joints shall be ground flush with adjoining material and finished to harmonize therewith. Whenever material has been sunk or depressed by welding operation, depression shall be suitably hammered and peened flush with the adjoining surface and ground to eliminate low spots. In all cases the grain of rough grinding shall be removed by successive fine polishing operations.
f. All unexposed welded joints on undershelves of tables or counters of stainless steel shall be suitably coated at the factory with an approved metallic-based paint.
g. After galvanized steel members have been welded, all welds and areas where galvanizing has been damaged shall have a zinc dust coating applied in conformance with Military Specification Number MIL-P-26915.

2. Joints:

a. Butt joints and contact joints wherever they occur, shall be close fitting and shall not require a filler. Wherever break bends occur, they shall be free of undue extrudence and shall not be flaky, scaly, or cracked in appearance; where such breaks do mar the uniform surface appearance of the material, all such marks shall be removed by suitable grinding, polishing, and finishing. Wherever sheared edges occur, they shall be free of burrs, fins, and irregular projections and shall be finished to obviate all danger of laceration when the hand is drawn over them. In

no case shall overlapping materials be acceptable where miters or bullnosed edges occur.

b. Field welded joints shall be ground smooth without dips and irregularities and finished to match original finish.

3. Bolt, Screw and Rivet Construction:

a. All exposed surfaces shall be free from bolt and screw heads. When bolts are required, they shall be of the concealed type and be of similar composition as the metal to which they are applied.

b. Where bolt or screw threads on the interior of fixtures are visible or may come into contact with hands or wiping cloths, they shall be capped with a stainless steel or chrome acorn nut and stainless steel lock washer.

c. If rivets are used to fasten rear paneling to the body of the fixture, such rivets shall be stainless steel. In no case shall iron rivets be used.

4. Sound Deadening:

a. Schnee Butyl-Sealant 1/2" wide rope continuously between all frame members and underside of stainless steel table tops, overshelves and undershelves.

b. Tighten stud bolts for maximum compression of sealant.

5. Hi-Liting:

a. All horizontal edges of stainless steel tops, splashes, tops of raised rolled rims, and edges of all exposed doors, handles and shelf edges shall be hi-lited, in uniform design by grinding with abrasive not coarser than #240 grit, then polishing with compound to a uniform mirror finish.

6. Polishing:

a. The grain of polishing shall run in the same direction on all horizontal and on all vertical surfaces of each item of fabricated equipment except in the case where the finish of the horizontal sections of each shall terminate in a mitered edge.

b. Where sinks and adjacent drainboards are equipped with backsplash, the grain of the polishing shall be consistent in direction throughout the length of the backsplash and sink compartment.

7. Finishes:

a. Paint and coatings shall be of an N.S.F. approved type suitable for use in conjunction with foodservice equipment. Such paint or coating shall be durable, non-toxic, non-dusting, non-flaking and mildew resistant, shall comply with all governing regulations, and shall be applied in accordance with the manufacturers recommendations.

b. All exterior, galvanized parts, exposed members of framework, and wrought steel pipe where specified to be painted shall be cleaned, primed with rust inhibiting primer, de-greased, and finished with two (2) coats of glossy enamel grey hammertone paint, unless otherwise noted.

c. Where baked enamel finishes are specified, they shall be oven baked on the fixtures for a minimum of 1-1/2 hours at a minimum temperature of 300º F.

d. Fabricated equipment shall be spray coated with plastic suitable for protecting the equipment during transport and installation. The coating shall be easily removable after the equipment installation is complete at the job site, and final clean-up has begun.

D. Construction:

1. Legs:

a. All tubular stands for open base tables, sinks, or dishtables shall have legs constructed of 1-5/8" O.D. stainless steel tubing, with 1-1/4" O.D., #16 gauge stainless steel crossbracing running between legs at a point 10" above finished floor.
b. All joints between legs and crossbracing shall be welded and ground smooth, full 360º.
c. The top end of legs shall be closely fitted into fully-enclosed stainless steel conical gussets no less than 3" high, similar to Klein #481-58 or #483-58, or approved equal.
d. Gussets shall be fully welded to framing reinforcing members, so that, set screw is not visible from front.
e. Legs without crossrails will not be accepted.
f. Legs shall be spaced at not more than 5'-6" on centers, unless otherwise specified.

2. Feet:

a. All tubular legs will be swedged for appearance and close fit to United Show Case #BF-158, or approved equal, fully enclosed, stainless steel bullet-shaped foot.
   1.) The foot shall be threaded into a collar and completely welded inside the tubular leg to permit a maximum adjustment of 2" without any thread exposure.
   2.) Threads shall be National Course Series Class 2 fit or better, machined to prevent end play when foot is at maximum adjustment.
   3.) The bullet-shaped foot shall have slightly rounded bottom to protect the floor, and a minimum bearing surface of 3/4" diameter of stainless steel-to-floor contact.
   4.) Bottom of tubular leg shall be finished off smoothly to provide a sanitary fitting and prevent the accumulation of grease or other debris.

b. Cabinet type fixtures shall be mounted on 8" high die-stamped, sanitary, two-piece stainless steel legs no less than 2-3/4" in diameter at the top, Component Hardware #A72-0811, or approved equal.
   1.) The bottom fully enclosed, stainless steel, bullet-shaped foot threads up into the inside of the upper member, with a male threaded 5/8" bushing to permit maximum adjustment of 2" without thread exposure.
   2.) The upper section shall be stamped in a neat design with a flared inverted shoulder and fully welded to a base plate designed for anchoring to the channel underbracing.

3. Table Tops:

a. Tables shall be constructed of stainless steel, and of a thickness not less than #14 gauge with 1-3/4" by 120º rolled edges, or as otherwise specified and detailed.
b. All corners shall be bull-nosed and of the same radius as rolled edges.
c. Joints where required shall be butt-welded and ground smooth to present a uniform one-piece appearance.
d. All tops shall be reinforced on the underside with a fully welded framework of 1-1/2"x1-1/2"x1/8" galvanized steel angles with the framing extending around the top perimeter and crossbraced on 24" maximum centers.
e. 1"x4"x1" galvanized or stainless steel, fully welded, cross channel, closed end members placed at each pair of legs with one (1) channel running lengthwise will also be acceptable.
f. All tops shall be reinforced so that there will be no noticeable deflection.
g. Metal tops where adjacent to walls or other items of equipment, shall be constructed with integral, coved, back and/or endsplashes as required and specified in accordance with the standard details contained herein. Close all ends of splashes.

4. Enclosed Bases:

a. All enclosed bases or cabinet bodies shall be of seamless #18 gauge stainless steel construction, enclosed on the ends and sides as required and called for under each item.
b. Ends of body shall terminate at front or operator's side in a 2" wide mullion, vertical, and completely enclosed. All intermediate mullions shall be completely enclosed.
c. The bases shall be reinforced at the top with a framework of 1-1/2"x1-1/2"x1/8" galvanized angles, with all corners mitered and welded solid.
d. Underside of top shall be reinforced with channels and gussets where necessary. Additional angles and cross members shall be provided to reinforce shelves and support tops under heavy tabletop equipment.
e. Where sinks or other drop-in equipment occur, provide additional reinforcing extending crosswise, both sides of opening.
f. In the case of fixtures fitting against or between walls, the bodies shall be set in 1" or 2" from the wall line, with the tops continuing to the wall line with integral, coved splashes as specified. Extend vertical face of body to the wall line only. This will permit adjustment to wall irregularities. Vertical trim strips will not be accepted.
g. Bodies shall be fitted with counter style stainless steel legs as hereinbefore specified.

5. Drawers:

a. Drawers, where specified, shall have removable pan inserts of #18 gauge stainless steel, and shall be approximately 20"x20"x5" deep unless otherwise specified.
   1.) Perimeter top edge shall be flanged out 1/2".
   2.) All interior horizontal corners shall be rounded on a 1" radius, and all interior vertical corners shall be rounded on a 2" radius.

b. Fronts shall be double pan #16 gauge stainless steel construction, 1" thick, insulated with a semi-rigid, fiberglass board, un-faced, having a three-pound density.
   1.) The top of the drawer face shall be formed as an integral pull by breaking the front pan back on a 45º angle 1", then straight up 1", back to front 1", and then down at the front 3/4".
   2.) Drawer front shall have all edges and corners ground smooth with a radius edge pull.

c. The drawer shall have an all welded frame of 1"x1", #16 gauge stainless steel angles sized to fit the removable pan insert.
d. Drawers shall operate on #12 gauge slides with roller bearings with hardened and ground raceways, Grant, Model #3320, or approved equal. Slides shall be pitched approximately 3/8" per foot to permit self-closing action.
e. Drawers shall be adequately and neatly fitted to the guides to permit easy operation without rattle or binding.
f. Slides and frame shall be reinforced to support a dead weight of 150 pounds when drawer is fully extended.
g. Adjustable stops shall be provided for each drawer at the fully-opened position, and be readily lift-able by hand for easy removal of drawer.
h. All drawers not mounted inside a cabinet body shall be completely enclosed in an #18 gauge stainless steel box-type enclosure and suspended from angle framing under the fixture top. The housing bottom shall be flanged and welded to an #18 gauge stainless steel reinforcing channel extending across the open end.

6. Sliding Doors:

a. Sliding doors shall be of the double pan type, with the exterior pan constructed of &2#18 gauge stainless steel with all four sides channeled and corners welded. The interior pan shall be similarly constructed of #20 gauge stainless steel, set into the exterior pan, and welded in place.

b. All doors shall be insulated with semi-rigid fiberglass board, un-faced, having a three-pound density. Styrofoam shall not be acceptable.
c. Doors 18" wide or greater, shall have internally welded 4" wide reinforcing channels to prevent warpage.
d. Each door shall be fitted with a positive flush-type stainless steel pull, Standard-Kiel #1262-1014-1283 recessed handle, or approved equal.
e. In the back of each door install a 1"x1", #16 gauge stainless steel angle stop welded in a suitable location to prevent the doors from overpassing the flush pulls.
f. Doors in the closed position shall overlap each other by no more than 2".
g. Each door shall be fitted with two (2), 1-3/8" ball bearing sheaves fastened to 1"x1/8" stainless steel bar stock welded to the top corners of each door for suspending on an overhead #16 gauge stainless steel channel track. The hangers shall be tapped for 1/4"-20 thumb screw vertical locks which prevent the doors from jumping the track in operation while permitting easy removal for cleaning without tools.
h. Insure that the bottom of the doors are positively and continuously guided to assure proper alignment and passing regardless of the position of each door.
i. Provide hard rubber bumpers for doors to close against to insure quiet operation.

7. Hinged Doors:

a. Hinged doors shall be of the same materials and construction as sliding doors previously specified.
b. Hinges shall be heavy duty, stainless steel, removable type, and fastened by tapping into 1/4"x3/4" stainless steel bar stock inside the door pan and behind the door jamb.
c. The door face shall be flush with the cabinet body when fully closed.
d. Size widths of doors equally when installed in pairs, or in series with other pairs, with no door being greater than 36" in width.
e. Doors shall be held closed by permanent magnetic closure devices of an approved type and of sufficient strength to hold the doors shut. Install two (2) per door (minimum), mounted to the door jamb, top and bottom, with opposing chrome-plated steel plates securely fastened to the inner panel of the doors.

8. Undershelves:

a. All open base tables shall be provided with full-length undershelves of #16 gauge stainless steel fully welded to legs with all joints ground smooth and polished.
b. Front edge shall turn down 1-1/2" and under 1/2".
c. Turn up rear and ends 2", with integral coved radius, when specified.
d. If required by width, provide 1-1/2"x1-1/2"x1/8" galvanized angle bracing mounted to underside, full length.

9. Interior Shelves:

a. All interior shelves within cabinet bodies, enclosed bases and overhead cabinets, shall be of #16 gauge stainless steel.
b. Removable shelves shall be constructed in equal sections, and rest in 1-1/2"x1-1/2"x1/8" stainless steel angle frame. Cove all horizontal corners in accordance with N.S.F. requirements.
c. Stationary shelves shall have 2" turn-up on back and ends, and continuously welded to cabinet body, polished and ground smooth to form a one-piece interior free of any crevices.
d. Front edge shall turn down 1-1/2" and under 1/2", and finished with "z" bar forming completely enclosed edge for maximum strength and sanitation.
e. Provide 1-1/2"x1-1/2"x1/8" angle bracing mounted to underside, full length.

10. Elevated Shelves:

a. Shelves over equipment not adjacent to a wall shall be mounted on 1" diameter #16 gauge stainless steel tubular standards neatly fitted with stainless steel base flanges, unless otherwise specified.
b. The top of the tubular standards shall be completely welded to #14 gauge stainless steel support channels, full width of overshelf.
c. Inside the tubular standard, and welded to same, provide 1/2" diameter steel tension rod extended through countertop and securely anchored to lower framework reinforcing with nuts and lock washers in such a manner as to assure a stable, sway-free structure.
d. If required by width, provide 1-1/2"x1-1/2"x1/8" stainless steel angle bracing mounted to underside, full length.
e. Cantilevered shelves, when called for, shall be #16 gauge stainless steel supported on #14 gauge stainless steel brackets welded to 1-5/8" O.D. stainless steel tubular standards extending through the backsplash, and fully welded to the table framework. Provide Klein #481-SH welded sleeves where standards penetrate backsplash.

11. Wall Shelves:

a. Open wall shelves shall be constructed of #16 gauge stainless steel with back and ends turned up 2", positioned 2" out from face of wall, with all corners welded, and supported on #14 gauge stainless steel brackets.
b. Brackets shall be flanged inward beneath the shelf and at the wall 1-1/2" with intersecting flanges completely welded, and attached to shelf with studs welded to the underside and bolted with stainless steel lock washers and chrome-plated cap nuts.
c. Each bracket shall be fastened to the wall with a minimum of two (2) 1/4"-20 stainless steel bolts anchored securely by means of toggles or expansion shields.

12. Sinks:

a. All sinks shall be the size and shape as shown on drawings, and constructed of #14 gauge stainless steel with backs, bottoms and fronts formed of one continuous sheet and the ends welded in place.
b. Sinks shall have all corners, both vertical and horizontal, coved on a 3/4" radius electrically welded, ground smooth and polished. Solder in filleted corners will not be acceptable.
c. Multiple compartment sinks shall be divided with double wall, #14 gauge stainless steel partitions with a 1/2" radius on top and all corners rounded as other corners, continuously welded, ground smooth and polished.
d. The bottom of each compartment shall be creased to a die stamped recess, tapered and shaped to receive a lever type waste without the use of solder, rivets, or welding.
e. Provide #14 gauge stainless steel waste lever angle bracket mounted to underside of compartment at front.
f. The front and exposed ends of sinks shall be fabricated with a 1-1/2", 180º rolled edge. The back and ends adjacent to walls or other fixtures shall be turned up with integral coved edge 12" high and returned 2-1/2" at the top on a 45º angle. Cap ends of all exposed splashes.
g. Unless otherwise specified, two (2) faucet holes on 8" centers shall be provided, located over the center line of partitions between compartments, 2-1/2" down from splash break.
h. Gussets for legs shall be fully welded all around to #12 gauge stainless steel triangular plates fully welded to underside of sink.
i. Sinks fabricated into working surfaces shall be constructed of the same material and in like manner to sinks specified above, except rolled edge and backsplash shall be omitted and the bowl shall be completely welded integral and flush with the working surface. Where basket type wastes are called for, they shall be fitted with removable seats.
j. Where sink bowls are exposed, the exterior shall also be polished to a #4 finish.

13. Sink Drainboards:

    a. Drainboards shall be constructed of the same material as the sinks and shall be welded integral to same.
    b. The front portion of drainboards shall continue the 1-1/2", 180º rolled edge of sink bowls on a continuous and level horizontal plane.
    c. The surface of the drainboard shall pitch from 2-1/2" at the end furthest from the sink, to 3" at the bowl; or 1/8" per foot. In addition, the bottom surface shall be dished toward the center for complete drainage.
    d. The backsplash of the drainboard shall match the rear of the sink contour and shall be welded integral thereto, running parallel to the floor.
    e. Drainboards shall be reinforced on the underside with a framework of 1"x4"x1" stainless steel channel underbracing placed at each pair of legs, with exposed ends capped, and one (1) channel running lengthwise.
    f. Where disposer cones are fabricated into drainboards, additional 1"x4"x1" stainless steel channels shall be welded into the top framing, spanning the drainboard from front-to-back on both sides of the cone and located not more than 3" to either side.
    g. Disposer control panels or switches shall be supported beneath drainboards, when specified, by means of a #12 gauge stainless steel mounting bracket.

14. Dishtable Tops:

    a. Dishtables shall be constructed of #14 gauge stainless steel with all corners, both vertical and horizontal, coved on a 3/4" radius electrically welded, ground smooth and polished. Solder in filleted corners will not be acceptable.
    b. Fronts and exposed ends shall be fabricated with a 3" high, 1-1/2", 180º rolled edge with rounded corners. The back and ends adjacent to walls or other fixtures shall be turned up with integral coved edge 12" high and returned 2-1/2" at the top on a 45º angle. Cap ends of all exposed splashes.
    c. All tops shall slope 1/8" per foot (minimum).
    d. Dishtables shall be reinforced on the underside with a framework of 1"x4"x1" stainless steel channel underbracing placed at each pair of legs, with exposed ends capped, and one (1) channel running lengthwise fully welded between front-to-back channels.
    e. Where tops fit into dishmachines, they shall turn down and into, forming a sealed watertight fit, and attached according to dishmachine manufacturers instructions.
    f. On each side of dishmachine, tables shall be provided with integral splash shields as part of the backsplash.
    g. Silicon filling of gaps caused by poor fit will not be acceptable.
    h. On corner-type door machines, provide #14 gauge stainless steel wall-mounted, splash panel to protect adjacent wall, full width of door opening.

15. Cafeteria Style Counters:

    a. All counters shall be constructed as previously specified under Enclosed Bases.
    b. Provide top and bottom framing for each counter food pan, cold pan, coffee urn, ice cream unit, ice bin, dish dispenser, etc., whether a drop-in unit or a cutout for a portable unit.
    c. Where plate shelves occur, frame horizontally 8-1/2" back from counter edge or as design dictates, and at bottom of shelf at counteredge.
    d. The countertop shall be constructed of #14 gauge stainless steel, as previously specified, with all joints welded, ground and polished.
    e. Fronts and exposed ends shall be stainless steel, plastic laminate or other material as noted in the Item Specifications.
    f. All display glass shelving shall be 1/4" polished plate glass and fully trimmed with #18 gauge stainless steel formed channels. Top shelves shall be the same width as the shelf below. Shelves shall be supported on 5/8" square, #16 gauge stainless steel perimeter tubing fully welded to 1-1/4" square, #16 gauge stainless steel tubing uprights.

g. Provide appropriate adjustable glass sneeze or breath guards trimmed in stainless steel along front, entire length, mounted in Klein 4465-A brackets.
h. Protector shelf over hot food wells shall be #16 gauge stainless steel supported on 1-1/4" square, #16 gauge stainless steel tubing uprights, with 1/4" polished plate glass front and end panels trimmed in #18 gauge stainless steel channels. When specified for self-service, mount bottom edge of front panel 8" above countertop.
i. All display and protector shelves shall be furnished with full-length fluorescent lights wired to on/off switch in counter apron, with lamps and protective shields. Conceal all wiring in tubular uprights.
j. Refer to Item Specification for changes, as required.
k. Counter shall be internally wired complete by the K.E.C., and in such a way as to meet the requirements of the Electrical Code of the job location.

2.4 EQUIPMENT

A. All items listed on the Contract Documents under the heading "Equipment Schedule" shall be furnished in strict accordance with the foregoing specifications and with the following detailed Itemized Specifications.

B. Manufacturer's names and model numbers are shown establishing quality, size, and finish required, representing the Owner's and Consultant's requirements and basis for bid. Equipment is listed hereinafter with same item numbers as shown on Contract Documents.

PART 3 - EXECUTION

3.1 INSPECTION

A. Before beginning the installation of foodservice equipment, the spaces and existing conditions shall be examined by the K.E.C. and any deficiencies, discrepancies, or unsatisfactory conditions for proper installation of foodservice equipment shall be reported to the Architect in writing.

1. Do not proceed with installation until unsatisfactory conditions have been corrected in a manner satisfactory to the installer.
2. Beginning installation shall constitute acceptance of the area.

3.2 PREPARATION

A. Foodservice equipment drawings are diagrammatic and intended to show layout, arrangement, mechanical and electrical requirements.

B. Field verify all measurements at the building prior to fabrication of custom equipment. Coordinate measurements and dimensions with rough-in and space requirements.

3.3 INSTALLATION

A. The K.E.C. shall coordinate his delivery schedule with the Contractor to ensure adequate openings in the building to receive the equipment.

B. Equipment shall be un-crated, fully assembled and set level in position for final connections. Parts shipped loose but required for connection shall be properly tagged and shall be accompanied by the necessary installation instructions.

C. Provide a competent, experienced foreman to supervise installation and final connections with other trades.

D. Remote Refrigeration Systems:

1. All refrigeration work where applicable to this contract shall be accomplished in an approved manner, using finest quality fittings, controls, valves, etc.
2. Refrigeration items shall be started up, tested, adjusted, and turned over to the Owner in first class condition and left running in accordance with the manufacturer's instructions.
3. Refrigeration lines and hook-ups shall be completed by the K.E.C. with the exception of electric, water, and drain line final connections unless otherwise specified.
4. All copper tubing shall be refrigerant grade A.C.R. or type "L".
5. Silver solder and/or Sil-Fos shall be used for all refrigerant piping. Soft solder is not acceptable.
6. All refrigerant lines in pipe sleeves or conduit shall be effectively caulked at ends to prevent entrance of water or vermin and at penetrations through walls or floors.
7. All tubing shall be securely anchored with clamps, and suspended lines shall be supported with adjustable hangers at 6'-0" o.c. maximum.
8. Wrap drain line in freezer compartment(s) with approved heat-tape for final connection by Electrical Contractor.

E. Sealing and Caulking:

1. Prior to the application of sealant, all surfaces shall be thoroughly cleaned and de-greased.
2. Apply around each unit of permanent installation at all intersections with walls, floors, curbs or other permanent items of equipment.
3. Joints shall be air-tight, water-tight, vermin-proof, and sanitary for cleaning purposes.
4. In general, joints shall be not less than 1/8" wide, with backer rod to shape sealant bead properly at 1/4" depth. Shape exposed surfaces of sealant slightly concave, with edges flush with faces of materials at joint.
5. At internal corner joints, apply sealant or gaskets to form a sanitary cove, of not less than 3/8" radius.
6. Provide sealant-filled joints up to 3/4" in joint width. Trim strips for wider joints shall be set in a bed of sealant and attached with stainless steel fasteners, 48" o.c., or less, to insure suitable fastening and prevent buckling of the metals fastened.

F. Cutting:

1. All cutting, fitting, or patching required during installation shall be accomplished by the K.E.C., at his own expense, so as to make the work conform to the plans and specifications.
2. The K.E.C. shall not cut or otherwise alter, except with the consent of the Owner, the work of any other Contractor.
3. Provide cut-outs in foodservice equipment where required to run plumbing, electric, or steam lines through equipment items for final connections.

3.4 FIELD QUALITY CONTROL

A. Inspection:

1. Provide access to shop fabrication areas during normal working hours to facilitate inspection of the equipment, during construction, by the Architect or his authorized representative.
2. Errors found during these inspections shall be corrected to the extent required within the scope of the plans, specifications, and approved drawings.

B. Start-Up and Testing:

1. Delay start-up of foodservice equipment until service lines have been tested, balanced, and adjusted for pressure, voltage, and similar considerations; and until water and steam lines have been cleaned and treated for sanitation.
2. Before testing, lubricate each equipment item in accordance with manufacturer's recommendations.
3. Supply a trained person or persons who shall start up all equipment, test and make adjustments as necessary, resulting in each item of equipment, including controls and safety devices, performing in accordance with the manufacturer's specifications.
4. All gas-fired equipment shall be checked by the local gas company as to calibration, air adjustments, etc., and adjustments made as required.
5. Repair or replace any equipment found to be defective in its operation, including items which are below capacity or operating with excessive noise or vibration.

C. Demonstration:

1. Provide an operating demonstration of all equipment at a time of Owner's convenience, to be held in the presence of authorized representatives of the Architect and Owner.
2. Demonstration shall be performed by manufacturer's representative knowledgeable in all aspects of his equipment.
3. During the demonstration, instruct the Owner's operating personnel in the proper operation and maintenance of the equipment.
4. Furnish complete, bound, operation/maintenance manuals and certificates of warranty for all items of equipment provided, in accordance with Article 1.5 Submittals, Paragraph F, at this demonstration time.

3.5 ADJUST AND CLEAN

A. Upon completion of installation and tests, clean and sanitize foodservice equipment, and leave in condition ready for use in food service.

B. Remove all protective coverings, and thoroughly clean equipment both internally and externally.

C. Make and check final adjustments required for proper operation of the equipment.

D. Restore finishes marred during installation to remove abrasions, dents, and other damages. Polish stainless steel surfaces, and touch-up painted surfaces with original paint.

E. Clean up all refuse, rubbish, scrap materials, and debris caused by the work of this Section, and put the site in a neat, orderly, and broom-clean condition.

3.6 ITEMIZED EQUIPMENT

ITEM #1: FLY FAN

QUANTITY: One (1)
MANUFACTURER: Mars Air Doors
MODEL NO.: LPN242-1UA OB (N058)
PERTINENT DATA: 42" Long, Wall-Mounted, NSF Model, Un-Heated
UTILITIES REQ'D: 1/6HP, 120V, 1PH
ALTERNATE MFRS.: Berner

Furnish and install per Equipment Plan, Sheet K-101; Manufacturer's Instructions and the following:

1. Accessories:
   -- Plunger-type micro-switch.
   -- Stainless steel mounting bracket.

ITEM #1: (Continued)

2. Attach to wall with expansion bolts centered over door opening.

ITEM #2: UTILITY CART, MOBILE

QUANTITY: Six (6)
MANUFACTURER: Lakeside Manufacturing Company
MODEL NO.: 544 (N058)
PERTINENT DATA: 700-Lb. Capacity, Three-Shelf, N.S.F. Model
UTILITIES REQ'D: ----
ALTERNATE MFRS.: Piper Products

Furnish and set-in-place per Equipment Plan, Sheet K-101; Manufacturer's Instructions and the following:

1. All four (4) casters swivel-type.

ITEM #3: SHELVING

QUANTITY: Nine (9)
MANUFACTURER: InterMetro Industries Corporation
MODEL NO.: MetroMaxQ (N058)
PERTINENT DATA: Five-Tier High, Free-Standing, Polymer
UTILITIES REQ'D: ----
ALTERNATE MFRS.: None

Furnish and set-in-place per Equipment Plan, Sheet K-101; Manufacturer's Instructions and the following:

Dry Storage:

1. Two (2) #MQ2442G sections; 24" W x 42" L x 5-tier high.

2. Seven (7) #MQ2448G sections; 24" W x 48" L x 5-tier high.

3. Thirty-six (36) #MQ74PE polymer posts; 74" high.

4. Plastic wedge lock connectors, quantity as required.

5. Locate bottom shelf @ 12" A.F.F.; space remaining shelves equally.

ITEM #4: DUNNAGE RACK

QUANTITY: Two (2)
MANUFACTURER: InterMetro Industries Corporation
MODEL NO.: MetroMax i (N058)
PERTINENT DATA: Open-Grid Shelf Mat, Heavy-Duty Assembly, Polymer
UTILITIES REQ'D: ----
ALTERNATE MFRS.: None

Furnish and set-in-place per Equipment Plan, Sheet K-101; Manufacturer's Instructions and the following:

Dry Storage:

1. Two (2) #MHP2448G units, 24" W x 48" L.

2. Two (2) #M3TF2448E three-sided frames.

ITEM #4: (Continued)

3. Eight (8) #MX13P polymer posts, 13" high.

ITEM #5: CAN RACK, MOBILE

QUANTITY: Two (2)
MANUFACTURER: New Age Industrial Corp., Inc.
MODEL NO.: 97294CK (N058)
PERTINENT DATA: All Welded Aluminum Construction, (156) #10 Can Capacity
UTILITIES REQ'D: ----
ALTERNATE MFRS.: Win-Holt; Channel

Furnish and set-in-place per Equipment Plan, Sheet K-101 and Manufacturer's Instructions.

ITEM #6: WALK-IN COOLER/FREEZER

QUANTITY: One (1)
MANUFACTURER: Thermo-Kool
MODEL NO.: Indoor Installation (N058)
PERTINENT DATA: 4" Thick Durathane Construction - Class I; NSF Construction
UTILITIES REQ'D: 1750W, 120V, 1PH; (2) 3/4" IW
ALTERNATE MFRS.: American Panel; Bally; ThermalRite

Furnish and set-in-place per Equipment Plan, Sheet K-101; Building Conditions Plan, Sheet K-102; Manufacturer's Shop Drawing and the following:

1. Two Section Unit: 29'-9½" L x 12'-6½" W x 8'-6" H. Size width of interior compartments equally.

2. Exterior Finish:
   -- 26 GA stucco embossed galvanized steel where unexposed.
   -- 20 GA stucco embossed stainless steel where exposed.

3. Interior Finish:
   -- White acrylic enamel baked-on .040 stucco embossed aluminum walls.
   -- White acrylic enamel baked on 26 GA smooth galvanized steel ceiling.

4. Interior Floor:
   -- 4" prefabricated floor panels installed in 6" deep floor recess over hot asphalt paper or 10 MIL polyethylene sheets on building floor slab.
   -- 2" setting bed with two (2) layers of wire reinforcing mesh fabric and quarry tile floor material with 6" high integral coved base, interior and exterior of box, installed over prefabricated floor panel by Flooring Contractor.

5. Entrance Door:
   -- Two (2) flush-mounted, self-closing right-hand hinged doors with 34" x 76" net opening.
   -- Polished chrome camlift hinges with lift-off capability. One (1) extra hinge per door, three (3) total.
   -- Kason #1236 polished chrome lever-action handle with knob-turn release and cylinder lock.
   -- Kason #09440004 polished chrome mortise dead-bolt lock, factory mounted.
   -- Hydraulic door closer.
   -- Standard 2" diameter dial indicating thermometer factory mounted, each compartment.
   -- 36" high aluminum diamond tread kickplates, interior and exterior of door, frame and jamb.
   -- 14" x 24" heated observation windows, both compartments.
   -- Undercut doors for recessed floor application.
   -- Kason #1806 LED light fixture with high-impact plastic cover centered over door opening to avoid conflict with shelving, each compartment. Extend wiring in conduit, foamed within door panel header, to junction box mounted on top of walk-in ceiling, each compartment.

ITEM #6: (Continued)

- -- Kason #907 interior door handle, factory mounted, with concealed metal backing plate.
- -- Round vinyl door bumper mounted to front exterior face to protect handle from puncturing wall when door in full open position.
- -- Foot treadle door opener.
- -- Engraved phenolic plastic compartment sign - 12" long x 2" high; white in color with 1" high blue CAPITAL letters mounted on each door above observation window; (1) - COOLER, (1) - FREEZER.
- -- #10 gauge stainless steel flat heated threshold, all compartments.

6. Heated pressure relief port in freezer.

7. Four (4) Kason #1810L21248LB 48" long twin-tube LED light fixtures with shatter-proof high impact plastic covers centrally-mounted to walk-in ceiling per Detail, Sheet K-104; two (2) for the cooler, two (2) for the freezer. Shipped loose and installed by K.E.C. Final connection by Electrical Contractor.

8. Modularm Model #75LC recessed digital thermometer with audio-visual temperature alarm factory mounted in door frames for both cooler and freezer compartments inter-wired with building monitoring system by Electrical Contractor, as required. Extend temperature probe to rear wall of each compartment.

9. Provide and install trim strips of matching exterior finish between ends of walk-in panels and building walls from finish floor to 6" above finish ceiling; verify finished ceiling height.

10. Provide and install closure panels of matching exterior finish between top of walk-in and finish ceiling per Detail Sheet K-102; K.E.C. to verify finished ceiling height.

11. All electrical conduit shall be run concealed above walk-in ceiling, per Detail Sheet K-104.

12. Evaporator coil drain lines shall be run to floor drain with "P"-trap on exterior of box by K.E.C. Pitch drain lines 1" per foot of horizontal run.

13. Black flexible "Armaflex" insulation applied to exposed drain lines and fittings within interior of box by K.E.C.

14. Spiral heat tape applied to drain line within interior of freezer compartment prior to application of insulation by K.E.C.

15. Coordinate location of sprinkler head drops and provide penetrations, where necessary.

16. Seal and insulate all openings to prevent infiltration of warm air into cooler/freezer compartments by K.E.C.

17. Quality Inspection Requirement:
    - -- Walk-In shall be completely erected at the manufacturer’s facility prior to shipment and a quality control inspection performed on the assembled structure. A digital photograph of factory assembled walk-in shall be provided for the K.E.C. permanent records and included in the operation and maintenance manuals.

18. Accessories:
    - -- Two (2) Mars Air LoPro #LPN36-IU air door curtains with optional on/off microswitch. Electrical Contractor to provide power receptacle and final connection. Center fan over each entrance door opening and attach to wall panel with thru-bolts.
    - -- #16 ga. stainless steel hat-channel bumper rail with closed ends installed to front face of walk-in, full-length, mounted @ 36" A.F.F. Provide 1/8" diamond tread kickplates from top of finish floor coved base to bottom of bumper rail.

ITEM #7: COOLER REFRIGERATION SYSTEM

QUANTITY: One (1)
MANUFACTURER: ColdZone
MODEL NO.: CFO200E4S-E (N058)
PERTINENT DATA: Uni-Pak, Air Cooled, Outdoor Installation,
UTILITIES REQ'D: 11.6A, 208V, 3PH
ALTERNATE MFRS.: RDT, OmniTemp

Furnish and install per Equipment Plan, Sheet K-101; Manufacturer's Shop Drawing and the following:

1. Condensing Unit: Factory Pre-Assembled, Glacier Scroll, Medium Temperature, R-404A.

2. Mounted on building roof above walk-in cooler on roof curb. Curb with pitch-pocket furnished and installed by General Contractor. Refer to mechanical roof plan for exact location.

3. Complete winterization package and condensing unit weatherproof cover.

4. Overall size: 28.25" L x 40" W x 22" H.

5. Weight: 215 lbs.

6. Evaporator Coil with High-Efficiency EC Motor: Low-Profile, End-Mount Type, Model AA36-170B; 2.7A, 120V, 1PH.
   -- System to operate at +35° F.
   -- Furnished complete with Thermostat, Solenoid & expansion values. Factory mounted ready for final connection by refrigeration contractor.

7. Complete refrigeration system warrantee: five (5) years for the compressor, Two (2) years for the condensing unit, and Two (2) years for all parts of the evaporator coil.

8. Factory installed main-fused disconnect switch.

ITEM #8: FREEZER REFRIGERATION SYSTEM

QUANTITY: One (1)
MANUFACTURER: ColdZone
MODEL NO.: CFO500L4S-E (N058)
PERTINENT DATA: Uni-Pak, Air Cooled, Outdoor Installation, Remote, Surveillant Demand Defrost Controller
UTILITIES REQ'D: 21.1A, 208V, 3PH
ALTERNATE MFRS.: RDT, OmniTemp

Furnish and install per Equipment Plan, Sheet K-101; Manufacturer's Shop Drawing and the following:

1. Condensing Unit: Factory Pre-Assembled, Glacier Scroll, Low Temperature, R-404A.

2. Mounted on building roof above walk-in freezer on roof curb. Curb with pitch-pocket furnished and installed by General Contractor. Refer to mechanical roof plan for exact location.

3. Complete winterization package and condensing unit weatherproof cover.

4. Overall size: 33" L x 44" W x 22" H.

5. Weight: 352 lbs.

6. Evaporator Coil with High-Efficiency EC Motor: Low-Profile, End-Mount Type, Model AE46-164B, 1.8A, 208V, 1PH (Fan); 17.4A, 208V, 1PH (Defrost Heater).
   -- System to operate at -10º F.

ITEM #8: (Continued)

-- Surveillant Demand Defrost Controller to consist of a microprocessor driven controller that reduces the energy used by the evaporator coil in refrigeration system through precise control of superheat, fan management and demand defrosts, factory-mounted.
-- Furnish Cat5 cable and interwire to building monitoring system by Electrical Contractor.

7. Complete refrigeration system warrantee: five (5) years for the compressor, Two (2) years for the condensing unit, and Two (2) years for all parts of the evaporator coil.

8. Factory installed main-fused disconnect switch.

ITEM #9: DUNNAGE RACK, MOBILE

QUANTITY: Two (2)
MANUFACTURER: InterMetro Industries Corporation
MODEL NO.: MetroMax i (N058)
PERTINENT DATA: Open-Grid Shelf Mat, Heavy-Duty, Polymer
UTILITIES REQ'D: ----
ALTERNATE MFRS.: None

Furnish and set-in-place per Equipment Plan, Sheet K-101; Manufacturer's Instructions and the following:

Cooler:

1. One (1) #MHP2448G unit; 24" W x 48" L.

2. One (1) #M3TF2448E three-sided frame.

3. Four (4) #MX9UP polymer posts, 9" high.

4. Two (2) #5MPX polyurethane swivel casters with bumpers.

5. Two (2) #5MPBX polyurethane swivel casters with brakes and bumpers.

Freezer:

1. One (1) #MHP2448G unit; 24" W x 48" L.

2. One (1) #M3TF2448E three-sided frame.

3. Four (4) #MX9UP polymer posts, 9" high.

4. Two (2) #5MPX polyurethane swivel casters with bumpers.

5. Two (2) #5MPBX polyurethane swivel casters with brakes and bumpers.

ITEM #10: SHELVING, MOBILE

QUANTITY: Eighteen (18)
MANUFACTURER: InterMetro Industries Corporation
MODEL NO.: MetroMax i (N058)
PERTINENT DATA: Four-Tier High, Open-Grid Shelf Mat, Polymer
UTILITIES REQ'D: ----
ALTERNATE MFRS.: None

Furnish and set-in-place per Equipment Plan, Sheet K-101; Manufacturer's Instructions and the following:

ITEM #10: (Continued)

Cooler:

1. Three (3) #MX2436G sections; 24" W x 36" L x 4-tier high.
2. Three (3) #MX2442G sections; 24" W x 42" L x 4-tier high.
3. Three (3) #MX2448G sections; 24" W x 48" L x 4-tier high.
4. Thirty-six (36) #MX63UP polymer posts for stem casters, 63" high.
5. Eighteen (18) #5MPX polyurethane swivel casters with bumpers.
6. Eighteen (18) #5MPBX polyurethane swivel casters with brakes and bumpers.
7. Plastic wedge lock connectors, quantity as required.
8. Locate bottom shelf @ 12" A.F.F.; space remaining shelves equally.

Freezer:

1. Three (3) #MX2436G sections; 24" W x 36" L x 4-tier high.
2. Three (3) #MX2442G sections; 24" W x 42" L x 4-tier high.
3. Three (3) #MX2448G sections; 24" W x 48" L x 4-tier high.
4. Thirty-six (36) #MX63UP polymer posts for stem casters, 63" high.
5. Eighteen (18) #5MPX polyurethane swivel casters with bumpers.
6. Eighteen (18) #5MPBX polyurethane swivel casters with brakes and bumpers.
7. Plastic wedge lock connectors, quantity as required.
8. Locate bottom shelf @ 12" A.F.F.; space remaining shelves equally.

ITEM #11: BLAST CHILLER/ SHOCK FREEZER

QUANTITY:	One (1)
MANUFACTURER:	Victory
MODEL NO.:	VBCF-8-70U (N058)
PERTINENT DATA:	One-Section, Reach-In, Self-Contained, Stainless Steel Interior/Exterior, (8)-Half-Size Sheet Pans or (4)-Full Size Sheet Pans Capacity
UTILITIES REQ'D:	10.1A, 208V, 1PH
ALTERNATE MFRS.:	Delfield, ThermoKool, American Panel

Furnish and set-in-place per Equipment Plan, Sheet K-101; Manufacturer's Instructions and the following:

1. Accessories:
   - Door hinged left.
   - Finished back.

2. Cord and plug set with matching receptacle furnished and installed by Electrical Contractor.

ITEM #12: WORKTABLE

QUANTITY: One (1)
MANUFACTURER: Custom Fabricated
MODEL NO.: #14 GA Stainless Steel
PERTINENT DATA: 9'-8" Long x 2'-6" Wide x 3'-0" High
UTILITIES REQ'D: ----
ALTERNATE MFRS.: None

Fabricate and set-in-place per Equipment Plan, Sheet K-101; Fabrication Detail, Sheet K-501 and the following:

1. Perimeter edge roll per Detail 1.02M.

2. Framework per Detail 1.05.

3. Legs per Detail 1.07.

4. Full-length stainless steel undershelf per Detail 1.11.

5. Full-length stainless steel overshelf per Detail 1.12.

6. Two (2) stainless steel drawer assemblies per Detail 1.14, Type I, with locks.

7. Worktable per Detail 2.01.

8. Sound-deaden underside of worktable with NSF-approved sound dampening material.

ITEM #13: HAND SINK

QUANTITY: Five (5)
MANUFACTURER: Eagle Foodservice Equipment Company
MODEL NO.: HSA-10-FAW-LRS (N058)
PERTINENT DATA: Wall Mounted, Wrist Action Faucet
UTILITIES REQ'D: 1/2" HW, 1/2" CW, 1-1/2" W
ALTERNATE MFRS.: Advance/Tabco

Furnish and set-in-place per Equipment Plan, Sheet K-101; Manufacturer's Instructions and the following:

1. Complete sink assembly consisting of: gooseneck faucet, p-trap, tailpiece and basket drain.

2. Accessories (each unit):
   -- #606215 skirt assembly.
   -- Integral right and left stainless steel splash shield.

ITEM #14: SOAP & TOWEL DISPENSER - (N.I.K.E.C. – VENDOR PROVIDED AND INSTALLED)

QUANTITY: Five (5)

ITEM #15: PREP SINK

QUANTITY: One (1)
MANUFACTURER: Custom Fabricated
MODEL NO: #14 GA Stainless Steel
PERTINENT DATA: 9'-0" Long x 2'-6" Wide x 2'-10" High
UTILITIES REQ'D: 1/2" HW, 1/2" CW, (2) 1-1/2" IW
ALTERNATE MFRS.: None

ITEM #15: (Continued)

Fabricate and set-in-place per Equipment Plan, Sheet K-101; Fabrication Detail, Sheet K-501; and the following:

1. Front and end edge rolls per Detail 1.02B.

2. 13" high backsplash per Detail 1.04B with finished back.

3. Framework per Detail 1.05.

4. Legs per Detail 1.07.

5. Stainless steel undershelf on both ends per Detail 1.11.

6. Sound-deaden underside of sinks and drainboards with NSF-approved sound dampening material.

7. Accessories:
   -- One (1) T&S #B-0133-ADF-12-B pre-rinse spray faucet with 12" swing-spout add-on faucet, 6" wall bracket and backflow preventer. Provide 2"x4" stainless steel column for pre-rinse unit bracket.
   -- Two (2) T&S #B-3950-01 twist waste valves with overflow assemblies and #010387-45 basket strainers.

8. Item will remain shrink-wrapped until ready for final connection by Plumbing Contractor. Immediately following completion of final connections, K.E.C. shall re-shrink-wrap tubs or provide removable panel to avoid use by construction trades. Post sign on wall above sink tubs in English and Spanish stating: WARNING! NOT TO BE USED BY CONSTRUCTION TRADES. FAILURE TO COMPLY WILL RESULT IN $500.00 FINE AND ALL COSTS TO REPLACE ITEM WITH NEW.

ITEM #16: MICROWAVE STEAMER OVEN

QUANTITY:	One (1)
MANUFACTURER:	Panasonic
MODEL NO.:	NE2180 (N058)
PERTINENT DATA:	2,100 Watts, Large Oven Capacity, Stainless Steel Interior/Exterior; Sonic Steamer®
UTILITIES REQ'D:	20.0A, 208V, 1PH
ALTERNATE MFRS.:	None

Furnish and set-in-place per Equipment Plan, Sheet K-101; Manufacturer's Instructions and the following:

1. Cord and plug set.

ITEM #17: WORKTABLE WITH SINK

QUANTITY:	One (1)
MANUFACTURER:	Custom Fabricated
MODEL NO.:	#14 GA Stainless Steel
PERTINENT DATA:	7'-10" Long x 3'-0" Wide x 3'-0" High
UTILITIES REQ'D:	½" HW, ½" CW, 1-½" IW
ALTERNATE MFRS.:	None

Fabricate and set-in-place per Equipment Plan, Sheet K-101; Fabrication Detail, Sheet K-501; and the following:

1. Perimeter edge roll per Detail 1.02M.

ITEM #17: (Continued)

2. Framework per Detail 1.05.

3. Legs per Detail 1.07. Flanged feet on each corner leg.

4. Crossbracing per Detail 1.10.

5. Stainless steel undershelf per Detail 1.11.

6. Two (2) stainless steel drawer assemblies per Detail 1.14, Type I, with locks.

7. Worktable per Detail 2.01.

8. 18" x 18" x 10" deep utility sink per Detail 3.04.

9. Sound-deaden underside of tabletop and sink with NSF-approved sound dampening material.

10. Accessories:
    -- One (1) T&S #B-0325 deck-mounted swivel gooseneck faucet with #B-199-2 aerator.

ITEM #18: WORKTABLE

QUANTITY:	One (1)
MANUFACTURER:	Custom Fabricated
MODEL NO.:	#14 GA Stainless Steel
PERTINENT DATA:	8'-0" Long x 3'-0" Wide x 3'-0" High
UTILITIES REQ'D:	----
ALTERNATE MFRS.:	None

Fabricate and set-in-place per Equipment Plan, Sheet K-101; Fabrication Detail, Sheet K-501 and the following:

1. Perimeter edge roll per Detail 1.02M.

2. Framework per Detail 1.05.

4. Legs per Detail 1.07.

5. Full-length stainless steel undershelf per Detail 1.11.

6. Two (2) stainless steel drawer assemblies per Detail 1.14, Type I, with locks.

7. Full-length table-mounted, double-sided utensil rack per Detail 1.18B.

8. Worktable per Detail 2.01.

9. Sound-deaden underside of worktable with NSF-approved sound dampening material.

ITEM #19: PAN RACK CART, MOBILE

QUANTITY:	Six (6)
MANUFACTURER:	CresCor
MODEL NO.:	207-UA-13A (N058)
PERTINENT DATA:	Universal Angles, Channel Posts, (18) 22x20 Pan Capacity
UTILITIES REQ'D:	----
ALTERNATE MFRS.:	Lakeside; InterMetro

ITEM #19: (Continued)

Furnish and set-in-place per Equipment Plan, Sheet K-101, Manufacturer's Instructions and the following:

1. Accessories:
   -- Full perimeter non-marking wrap-around vinyl bumper.

ITEM #20: SPARE NUMBER

ITEM #21: WORKTABLE WITH SINK

QUANTITY: One (1)
MANUFACTURER: Custom Fabricated
MODEL NO.: #14 GA Stainless Steel
PERTINENT DATA: 9'-0" Long x 2'-6" Wide x 3'-0" High
UTILITIES REQ'D: ½" HW, ½" CW, 1-½" IW
ALTERNATE MFRS.: None

Fabricate and set-in-place per Equipment Plan, Sheet K-101; Fabrication Detail, Sheet K-501 and the following:

1. Front and end edge roll per Detail 1.02M.

2. 6" high backsplash per Detail 1.04A.

3. Framework per Detail 1.05.

4. Legs per Detail 1.07.

5. Crossbracing per Detail 1.10.

6. Stainless steel undershelf per Detail 1.11.

7. 18" x 18" x 10" deep utility sink per Detail 3.04 with waste lever angle bracket welded to underside of sink.

8. Worktable per Detail 2.01.

9. Sound-deaden underside of tabletop and sink with NSF-approved sound dampening material.

10. Accessories:
    -- One (1) T&S #B-0325 deck-mounted swivel gooseneck faucet with #B-199-1 aerator.

ITEM #22: SLICER

QUANTITY: One (1)
MANUFACTURER: Hobart Corporation
MODEL NO.: HS7N-1 (N058)
PERTINENT DATA: Automatic, Variable 4-Speed Carriage Drive, 13" Knife
UTILITIES REQ'D: 1/2 HP, 120V, 1PH
ALTERNATE MFRS.: Bizerba; Globe

Furnish and set-in-place per Equipment Plan, Sheet K-101; Manufacturer's Instructions and the following:

ITEM #22: (Continued)

1. Accessories:
   -- One (1) #HS-FENFUL product fence.
   -- One (1) #HS-CHUTE food chute.
   -- One (1) #HS-AUTOLEGSET 4½" leg set.

2. Cord and plug set.

ITEM #23: WORKTABLE

QUANTITY: One (1)
MANUFACTURER: Custom Fabricated
MODEL NO.: #14 GA Stainless Steel
PERTINENT DATA: 7'-0" Long x 2'-6" Wide x 3'-0" High
UTILITIES REQ'D: ----
ALTERNATE MFRS.: None

Fabricate and set-in-place per Equipment Plan, Sheet K-101; Fabrication Detail, Sheet K-501 and the following:

1. Front and end edge roll per Detail 1.02M.

2. 6" high backsplash per Detail 1.04A.

3. Framework per Detail 1.05.
4. Legs per Detail 1.07.

5. Full-length stainless steel undershelf per Detail 1.11.

6. Two (2) stainless steel drawer assemblies per Detail 1.14, Type I, with locks.

7. Worktable per Detail 2.01.

8. Sound-deaden underside of worktable with NSF-approved sound dampening material.

ITEM #24: FOOD PROCESSOR

QUANTITY: One (1)
MANUFACTURER: Robot Coupe, USA
MODEL NO.: R602VV (N058)
PERTINENT DATA: Combination Vegetable Prep & Cutter/Mixer, Variable Speed, 7-Qt. Capacity
UTILITIES REQ'D: 15.0A, 120V, 1PH
ALTERNATE MFRS.: Electrolux

Furnish and set-in-place per Equipment Plan, Sheet K-101; Manufacturer's Instructions and the following:

1. Standard food processor package consisting of: food processor, 7-qt. stainless steel bowl, continuous feed vegetable preparation attachment, (1) #28064 1/8" slicing disc and (1) #28058 1/8" grating disc, each unit.

2. Accessories:
   -- One (1) #101230 wall mount disc rack.

3. Cord and plug set.

ITEM #25: UTILITY RACEWAY

QUANTITY:	One (1)
MANUFACTURER:	Captive-Aire Systems, Inc.
MODEL NO.:	UDI (N058)
PERTINENT DATA:	Island Type
UTILITIES REQ'D:	80.0A, 120/208V, 3PH; 3/4"HW, 1"CW; 1-1/2" Natural Gas @ 1,360MBH (Looped Service)
ALTERNATE MFRS.:	Avtec; Gaylord, Caddy

Furnish and install per Equipment Plan, Sheet K-101; Utility Raceway Details, Sheet K-502; Manufacturer's Instructions and the following:

1. All components and labor necessary for a complete system manufactured in accordance with NEC latest edition, NEMA, NFPA No. 96 and No. 54, Uniform Plumbing Code, ASME, OSHA using only U.L. Listed certified components.

2. One (1) 21'-0" long, 12" wide x 6'-10" high with risers, completely pre-wired and pre-plumbed to one final connection point for electric, hot water, cold water and gas. All connections shall face down on horizontal member.

3. System shall extend up to bottom edge of Ventilator, Item #26.
4. 54" overall height less risers with peaked top.

5. Risers on each end with 2" penetration into ventilator at 6'-8" A.F.F.

6. Entire raceway shall be constructed of #16 gauge Type 304 stainless steel with a #4 mill finish.

7. Removable link plates constructed of #16 gauge stainless steel.

8. Electrical compartment shall be completely enclosed with stainless steel housing accessible by the removal of link plates. Internal electrical feeder shall be cable wireway having balanced load and phases and with connection lugs for main service. Branch circuit wiring for each electrical connection shall be phase identified and sized in accordance with circuit breaker rated capacity. Raceway shall provide electrical, gas and water service for items #21, #22, #24, #27, #28, #30 and #31.

9. Provide 12" long interchangeable 16 gauge stainless steel link connection plate for each electrical connection equipped with individual circuit breaker(s) installed in breaker panel mounted in left-hand riser, and grounding type receptacle with twist-lock feature or pre-wired flexible sealtite conduit.

10. On each connection plate provide U.L. listed GFIC ground fault interrupter circuits and matching power supply cords on each 120-volt single-phase connection.

11. Hot water and cold water plumbing compartment shall be isolated from electrical compartment. All piping and disconnects in system shall be color coded.

12. At each individual gas branch connection, provide 1/4-turn ball valve and 48" long Dormont PVC coated AGA and NSF approved flexible hose with SnapFast quick-disconnect device and double SwivelMAX gas connectors.

13. Provide fire/fuel shut-off for electric equipment per NFPA No. 96. System shall require one final connection by Contractor from fire protection system.

14. All hot and cold water piping, including individual branch pipe connection, shall be hard temper type "L" copper tubing with copper sweat type solder fittings. At each individual connection, provide A.G.A approved flexible hose(s) with two wall brass and stainless steel construction with quick-disconnect fittings.

15. Provide matching cord sets for all electric equipment, ten (10) total.

ITEM #25: (Continued)

16. Neoprene bumper strips, full length.

17. Provide each mobile piece of equipment with an A.G.A. recognized restraining device protecting respective gas disconnect assemblies and connectors.

18. Electronic gas solenoid valve factory installed at each in-coming gas service ready for final connection per local codes by Plumbing Contractor; inter-wired by Electrical Contractor.

19. U.L. listed, solid-state control panel mounted in right-hand riser end, with the following integral accessories:
    -- Ventilator start/stop station with adjustable time-delay to exhaust residual heat.
    -- Ventilator light switch, pre-wired in 10ft. flexible conduit ready for connection to light junction box in ventilator by Electrical Contractor.

20. Accessories:
    -- One (1) OptiPure #OP350/50 water treatment system. Provide one (1) independent pre-piped water line to each service point for Item #27: Convection Steamer and Item #31: Hydrovection Oven.

21. Fabricated in four (4) sections, assembled in field to present integral one-piece appearance.

22. Main electrical shunt-type circuit breakers mounted in left-hand riser for 80A, 120/208V, 3PH service.

23. Factory System Design Verification (SDV) shall be performed after all inspections are complete. SDV report shall be available once completed.

24. Raceway shall be of same manufacturer as Ventilator, Item #26.

ITEM #26: VENTILATOR

QUANTITY:	One (1)
MANUFACTURER:	Captive-Aire Systems, Inc.
MODEL NO.:	6630ND-2-PSP-F (N058)
PERTINENT DATA:	Island Configuration, Captrate Solo Filter Type, Perforated Ceiling Make-Up Air Plenum, With Demand Control Ventilation (DCV) System & Fire Protection System
UTILITIES REQ'D:	4,800 CFM Exhaust/ 3,840 CFM Supply (Tempered), 800W, 120V, 1PH (Lights); 20A, 120V, 1PH, 24-Hour Dedicated Service (Fire Protection System)
ALTERNATE MFRS.:	Avtec; Gaylord, Caddy

Furnish and install per Equipment Plan, Sheet K-101; Ventilator Detail Drawing, Sheet K-503; Manufacturer's Instructions and the following:

1. 5'-6" Wide x 20'-0" Long x 2'-6" High, with bottom edge mounted at 6'-8" A.F.F. Length comprised of two (2) 10'-0" sections. Entire unit constructed of 18 GA stainless steel with liquid tight all welded external continuous seams and joints per N.F.P.A. 96, U.L. and State of Delaware Codes.

2. Six (6) U.L. Listed, NSF-Approved, 12"x12" recessed LED light fixtures; three (3) equally spaced each section. Bulbs furnished and installed by K.E.C.

3. Matching stainless steel perimeter closure panels to finished ceiling; K.E.C. to verify ceiling height.

4. Surface fire protection system nozzles and piping to be factory installed, chrome plated or stainless steel where exposed, ready for final connections by fire protection system sub-contractor.

ITEM #25: (Continued)

5. Hanger rods and support system from structure above by General Contractor. K.E.C. to coordinate method and location with other trades.

6. Stainless steel hanger brackets.

7. 12" wide stainless steel angle framing and closure panels to accommodate Utility Raceway, Item #25.

8. 14'-0" long rear-mounted and full-length, front-mounted completely insulated, perforated stainless steel ceiling-mounted make-up air plenum with integral supply air balancing dampers.

9. Stainless steel U.L. Classified 20" captrate solo grease filters with hook.

10. Semi-concealed stainless steel grease trough sloped to removable grease cups.

11. 3" integral stand-off @ rear and right end for semi-combustible compliance.

12. Factory System Design Verification shall be performed after all inspections are complete. SDV report shall be available once completed.

13. Ventilator shall be of same manufacturer as Utility Raceway, Item #25.

14. Accessories:
    - -- 12" wide utility cabinet mounted on right end of hood section with factory pre-piped Ansul R-102 fire suppression system and Demand Control Ventilation System #DCV1111 with light and fan switches and optional Smart Controls DCV.
    - -- Six-month and twelve-month inspections, servicing, and replacement of components of fire protection system as per NFPA-96 Latest Edition.
    - -- One (1) Ansul Model K01-2 hand-held fire extinguisher, 1.6 gallon, wall-mounted.
    - -- Field wrapper.

ITEM #27: CONVECTION STEAMER

QUANTITY:	One (1)
MANUFACTURER:	Market Forge
MODEL NO.:	Sirius II-10 (N058)
PERTINENT DATA:	Two-Compartment, Boilerless, Sirius II, (10) Pan Capacity, With Auto Water System
UTILITIES REQ'D:	(2)120V, 1PH, (2) ½" Natural Gas @ 27 MBH; (2) 3/4" CW; (2) 1" IW
ALTERNATE MFRS.:	None

Furnish and set-in-place per Equipment Plan, Sheet K-101; Manufacturer's Instructions and the following:

1. Accessories:
    - -- Water filter system provided under Item #25.

2. Backflow preventer furnished and installed by Plumbing Contractor.

3. Mechanical and electrical services provided thru Utility Raceway, Item #25.

ITEM #28: TILTING KETTLE, 20-GALLON

QUANTITY: One (1)
MANUFACTURER: Blodgett Oven Company
MODEL NO.: KLT-30E (N058)
PERTINENT DATA: Floor Mounted, Self-Contained, 2/3-Jacketed
UTILITIES REQ'D: 15.0A, 480V, 3PH; ½" HW, ½" CW, 2" IW
ALTERNATE MFR.: None

Furnish and set-in-place per Equipment Plan, Sheet K-101; Manufacturer's Instructions and the following:

1. Accessories:
   -- One (1) 2" tangent draw-off valve with strainer.
   -- One (1) kettle brush utensil kit.
   -- One (1) pan support.
   -- One (1) food strainer.
   -- One (1) counter balanced hinged cover.
   -- One (1) graduated measuring stick.
   -- One (1) double pantry faucet with swing spout and bracket.
   -- One (1) Type 316 stainless steel liner.

2. Electrical and mechanical services supplied through Utility Raceway, Item #25.

ITEM #29: FLOOR TROUGH

QUANTITY: One (1)
MANUFACTURER: IMC Teddy Foodservice Corporation
MODEL NO.: ASFT1830-SGAS (N058)
PERTINENT DATA: Anti-Spill, 14 GA S/S
UTILITIES REQ'D: 4" W
ALTERNATE MFRS.: Made to Drain

Furnish and install per Equipment Plan, Sheet K-101; Manufacturer's Instructions and the following:

1. 2'-6" long x 1'-6" wide, constructed and installed per Detail, Sheet K-102.

2. SGAS-30 anti-slip stainless steel subway style removable floor grate in equal sections, the lessor of 30 lbs. and/or 20" long.

3. Bottom of trough pitched to integral stainless steel waste cup with removable perforated stainless steel basket.

4. Top of trough installed flush with top of kitchen finished floor.

5. Unit furnished by K.E.C.; installed by Plumbing Contractor.

ITEM #30: RANGE, MOBILE

QUANTITY: One (1)
MANUFACTURER: Garland/U.S. Range
MODEL NO.: MST44S-E (N058)
PERTINENT DATA: Heavy-Duty Gas Range with Storage Base, (4) Open Burners, Master Series, Electronic Ignition, Flame Failure Protection
UTILITIES REQ'D: 0.1A, 120V, 1PH; 3/4" Natural Gas @ 140MBH
ALTERNATE MFRS.: None

Furnish and set-in-place per Equipment Plan, Sheet K-101; Manufacturer's Instructions and the following:

ITEM #30: (Continued)

1. Accessories:
   - -- Four (4) heavy-duty 5" diameter polyurethane swivel casters, front two (2) with brakes.
   - -- Stainless steel front and both sides.
   - -- ¾" rear gas connection. Cap and cover manifold ends.
   - -- 34" wide Model #M34LPBG, 10" low-profile backguard.
   - -- Pressure regulator.

2. Mechanical and electrical services supplied through Utility Raceway, Item #25.

ITEM #31: HYDROVECTION OVEN, MOBILE

QUANTITY:	Two (2)
MANUFACTURER:	Blodgett Oven Company, Inc.
MODEL NO.:	HVH-100G-DOUBLE (N058)
PERTINENT DATA:	Double Section, Standard Depth, HydroVection™ Oven With Helix Technology, SmartTouch™ Touchscreen Control
UTILITIES REQ'D:	(2)10.0A, 120V, 1PH; (2)3/4" CW, (2)1" IW; (2)3/4" Natural Gas @ 60 MBH
ALTERNATE MFRS.:	None

Furnish and set-in-place per Equipment Plan, Sheet K-101; Manufacturer's Instructions and the following:

1. Accessories (each unit):
   - -- Stacking kit.
   - -- Dormont Safety-Set equipment placement system.
   - -- Ten (10) multi-purpose fry pans.
   - -- Five (5) additional stainless steel wire racks.
   - -- Water pressure regulator, each compartment.
   - -- Backflow preventer.
   - -- One (1) Optipure #OP350/50 water treatment system to service Item #27: Convection Steamer and Item #31: Hydrovection Oven. Ship to Utility Raceway manufacturer for factory installation.

2. Electrical and mechanical services supplied through Utility Raceway, Item #25.

ITEM #32: PASS-THRU WARMING CABINET, MOBILE

QUANTITY:	Three (3)
MANUFACTURER:	Traulsen & Company, Inc.
MODEL NO.:	RHF132 WP-HHS/HHG (N058)
PERTINENT DATA:	One-Section, Self-Contained, Stainless Steel Exterior/Interior, Spec Line Series, Standard Depth
UTILITIES REQ'D:	7.8A, 120/208V, 1PH
ALTERNATE MFRS.:	Victory, True

Furnish and set-in-place per Equipment Plan, Sheet K-101; Manufacturer's Instructions and the following:

1. Half-height doors hinged per Equipment Plan. Glass doors on kitchen side, solid doors on serving side.

2. Cylinder locks, keyed-alike.

3. #16 gauge stainless steel, universal angle type, bottom support tray slides in lieu of wire shelves installed on 5" centers, five (5) pair per compartment, ten (10) total, per unit.

4. Exterior mounted digital thermometer installed on kitchen side.

ITEM #32: (Continued)

5. Plastic laminate finish with stainless trim factory applied to exterior door fronts on serving side only; color as selected by Architect; K.E.C. to verify.

6. 5" diameter heavy-duty swivel casters, two (2) with brakes.

7. Cord and plug set with matching receptacle furnished and installed by Electrical Contractor.

ITEM #33: PASS-THRU REFRIGERATOR, MOBILE

QUANTITY:	Three (3)
MANUFACTURER:	Traulsen & Company, Inc.
MODEL NO.:	RHT232NPUT-HHS/HHG (N058)
PERTINENT DATA:	Two-Section, Self-Contained, Stainless Steel Exterior/Interior, Spec Line Series, Standard Depth
UTILITIES REQ'D:	8.6A, 120V, 1PH
ALTERNATE MFRS.:	Victory, True

Furnish and set-in-place per Equipment Plan, Sheet K-101; Manufacturer's Instructions and the following:

1. Half-height doors hinged per Equipment Plan. Glass doors on kitchen side, solid doors on serving side.

2. Cylinder locks, keyed-alike.

3. No. 1 - #16 gauge stainless steel, angle type, bottom support tray slides for 18"x26" pans installed on 3" centers, nine (9) pair per compartment, eighteen (18) each unit, thirty six (36) total.

4. Exterior mounted digital thermometer installed on kitchen side.

5. Plastic laminate finish with stainless trim factory applied to exterior door fronts on serving side only; color as selected by Architect; K.E.C. to verify.

6. 5" diameter heavy-duty swivel casters, two (2) with brakes.

7. Cord and plug set.

ITEM #34: ICE MACHINE/BIN

QUANTITY:	One (1)
MANUFACTURER:	Manitowoc Equipment Works
MODEL NO.:	ID-0452A/B-570 (N058)
PERTINENT DATA:	Air-Cooled, 420-LB. Maker, 430-LB. Bin, Dice Cube Size
UTILITIES REQ'D:	13.2A, 120V, 1PH; 3/8" CW, 1/2" IW (Maker Drain), 3/4" IW (Bin Drain)
ALTERNATE MFRS.:	Scotsman

Furnish and set-in-place per Equipment Plan, Sheet K-101; Manufacturer's Instructions and the following:

1. Stainless steel exterior finish, ice machine and bin.

2. Accessories:
   - -- One (1) Everpure Model EV9324-21 InsurIce i2000² single water filter system with 20" Coarse Filter factory assembled to common wall mounting rack.
   - -- 6" high stainless steel leg set with adjustable bullet feet.
   - -- Custom fabricated stainless steel ice scoop holder bracket mounted to right-side of bin per Detail, Sheet K-501.

ITEM #34: (Continued)

3. Backflow preventor installed on incoming water line by Plumbing Contractor.

4. Cord and plug with matching receptacle furnished and installed by Electrical Contractor.

ITEM #35: SPARE NUMBER

ITEM #36: MILK COOLER, MOBILE

QUANTITY:	One (1)
MANUFACTURER:	Continental
MODEL NO.:	MC3-SS-D (N058)
PERTINENT DATA:	34" Wide, Dual Access, Forced-Air, 8-Crate Capacity
UTILITIES REQ'D:	1/4HP, 120V, 1PH
ALTERNATE MFRS.:	True

Furnish and set-in-place per Equipment Plan, Sheet K-101; Manufacturer's Instructions and the following:

1. Stainless steel exterior and interior.

2. Cord and plug set.

3. Cylinder lid lock.

4. Swivel casters with brakes.

5. Accessories:
   - -- #5-223 corner bumpers.
   - -- Foot pedal floor lock.
   - -- Digital thermometer.
   - -- Laminate finish to match Serving Counter,

ITEM #37: SERVING COUNTER

QUANTITY:	Three (3)
MANUFACTURER:	Shelleysteel by The Delfield Company
MODEL NO.:	Modular Stainless Steel Interlocking Sections
PERTINENT DATA:	Straight Line Configuration, #14 Gauge S/S Tops
UTILITIES REQ'D:	----
ALTERNATE MFRS.:	ColorPoint by Low-Temp Industries; Piper Products

Refer to individual counter components listed under alpha headings for specification.

ITEM #37A: HOT FOOD COUNTER

QUANTITY:	Three (3)
MANUFACTURER:	Shelleysteel by The Delfield Company
MODEL NO.:	SH-5-NU (N058)
PERTINENT DATA:	Electrically Heated, Open Base, Five (5) Wells, With Drains
UTILITIES REQ'D:	40.0A, 120/208V, 1PH; 1/2" HW, 3/4" IW
ALTERNATE MFRS.:	ColorPoint by Low-Temp Industries; Piper Products

Furnish and set-in-place per Equipment Plan, Sheet K-101; Manufacturer's Shop Drawing and the following:

ITEM #37A: (Continued)

1. (A) - 10" wide full-length solid stainless steel tray slide mounted on rigid brackets @ 29" A.F.F.

2. (E) – 6" wide, full-length solid stainless steel fold-down work shelf on server's side.

3. FlexiShield® #DCFSFS full-length food shields with stainless steel finish uprights, radiant heat lamp and LED light with shatterproof shield.

4. (F) - Line-up interlocks for counter body and tray slide.

5. Cord and plug set. Provide cord support clips. Double cord hooks on bottom of unit.

6. (V) – 6" high stainless steel legs with adjustable bullet feet. Stainless steel skirting on front.

7. (P) - Open understorage with bottom stainless steel shelf.

8. (QQ) - Food wells with individual drains and quarter-turn ball valves manifolded to common valve assembly with master shut-off valve housed within counter base located on end with hinged stainless steel access door per Detail, Sheet K-103.

9. Standard counter height of 36" A.F.F. Turn end down to align and interlock with adjacent solid top counter.

10. Provide drain line <u>less</u> shut-off valve. Plumber to extend copper drain line to nearest floor sink.

11. Front panels and exposed end with decorative accent; design and color as selected by Architect, K.E.C. to verify.

12. Accessories:
    - -- One (1) T&S #B-0208 deck-mounted single pantry fill faucet with swivel nozzle mounted on end opposite solid top counter, each unit.
    - -- Vollrath Company stainless steel pans and lids in the following configurations:
    - -- Five (5) #77200, 12x20 solid dome covers.
    - -- Five (5) #77250, 12x20 flat lids.
    - -- Fifteen (15) #30245, 12x10x 4" deep pans.
    - -- Twenty-five (25) #75025, 12x10 tight fitting lids.
    - -- Four (4) #90043 full-size, 4" deep perforated pans.
    - -- Two (2) #90023 full-size, 2" deep perforated pans.
    - -- Six (6) #3024-5 half-size, 4" deep pans.
    - -- Eight (8) #75120 half-size pan lids.
    - -- Three (3) #3034-2 third-size, 4" deep pans.
    - -- Three (3) #75130 third-size lids.
    - -- Four (4) #3022-5 full-size, 2.5" deep pans.
    - -- Two (2) #30243 half-size, 4" deep perforated pans.

ITEM #37B: SOLID TOP COUNTER

QUANTITY:	Three (3)
MANUFACTURER:	Shelleysteel by The Delfield Company
MODEL NO.:	SC-60-NU-MOD (N058)
PERTINENT DATA:	Open Base, 60" Long
UTILITIES REQ'D:	----
ALTERNATE MFRS.:	ColorPoint by Low-Temp Industries; Piper Products

Furnish and set-in-place per Equipment Plan, Sheet K-101; Manufacturer's Shop Drawing and the following:

ITEM #37B: (Continued)

1. (A) - 10" wide full-length solid stainless steel tray slide with mitered end mounted on rigid brackets@ 29" A.F.F.

2. (F) - Line-up interlocks for counter body and tray slide.

3. Provide cut-out in top for Item #40: Air-Screen Merchandiser compressor assembly. Counter base shall have isolated compressor housing with louvered stainless steel removable access panels and remote on/off switches for air-screen merchandiser lights and compressor, operator's side.

4. (V) - 6" high stainless steel legs with adjustable bullet feet. Stainless steel skirting on front.

5. (P) - Open understorage with bottom stainless steel shelf.

6. Modified counter height set @ 30" A.F.F.

7. Front panels with decorative accent; design and color as selected by Architect, K.E.C. to verify.

ITEM #37C: SOLID TOP COUNTER

QUANTITY:	Three (3)
MANUFACTURER:	Shelleysteel by The Delfield Company
MODEL NO.:	SC-36-NU-MOD (N058)
PERTINENT DATA:	Open Base, 36" Long
UTILITIES REQ'D:	----
ALTERNATE MFR.:	ColorPoint by Low-Temp Industries; Piper Products

Furnish and set-in-place per Equipment Plan, Sheet K-101; Manufacturer's Shop Drawing and the following:

1. (F) - Line-up interlocks for counter body and tray slide.

2. (V) – 6" high stainless steel legs with adjustable bullet feet.

3. Cord and plug set. Provide cord support clips. Double cord hooks on bottom of unit.

4. Open understorage with bottom and intermediate stainless steel shelf.

5. Modified counter height set @ 30" A.F.F.

6. Provide one (1) unit with cut-out in top for Item #39: Ice Cream Merchandiser. Counter base shall have isolated compressor housing with louvered stainless steel removable access panel and remote on/off compressor switch, operator’s side.

7. Front panels with decorative accent; design and color as selected by Architect, K.E.C. to verify.

ITEM #37D: CASHIER STAND

QUANTITY:	Two (2)
MANUFACTURER:	Shelleysteel by The Delfield Company
MODEL NO.:	SCS-50-NU-MOD (N058)
PERTINENT DATA:	Open Base, 50" Long
UTILITIES REQ'D:	15A, 120V, 1PH (Dedicated Circuit)
ALTERNATE MFR.:	ColorPoint by Low-Temp Industries; Piper Products

Furnish and set-in-place per Equipment Plan, Sheet K-101; Manufacturer's Shop Drawing and the following:

ITEM #37D: (Continued)

1. (A) - 10" wide full-length solid stainless steel tray slide with mitered end mounted on rigid brackets, at 29” A.F.F.

2. (F) - Line-up interlocks for counter body and tray slide.

3. (V) – 6" high stainless steel legs with adjustable bullet feet. Stainless steel skirting on front and exposed sides.

4. (Q) – 15-amp convenience outlet mounted below top in counter body. Provide die-raised opening in top for power cord access.

5. Cashier's utility drawer with locking provision mounted on end.

6. Cord and plug set. Double cord hooks on bottom of unit.

7. Modified counter height set @ 30" A.F.F.

8. Provide cut-out in top for Item #39: Ice Cream Merchandiser. Counter base shall have isolated compressor housing with louvered stainless steel removable access panel and remote on/off compressor switch, operator’s side.

9. Provide 6” high stainless steel platform sized to fit Cash Register.

10. Front panels with decorative accent; design and color as selected by Architect, K.E.C. to verify.

ITEM #37E: CASHIER STAND

QUANTITY:	One (1)
MANUFACTURER:	Shelleysteel by The Delfield Company
MODEL NO.:	SCS-30-NU-MOD (N058)
PERTINENT DATA:	30" Long
UTILITIES REQ'D:	15A, 120V, 1PH (Dedicated Circuit)
ALTERNATE MFR.:	ColorPoint by Low-Temp Industries; Piper Products

Furnish and set-in-place per Equipment Plan, Sheet K-101; Manufacturer's Shop Drawing and the following:

1. (A) - 10" wide full-length solid stainless steel tray slide mounted on rigid brackets at 29” A.F.F.

2. (F) - Line-up interlocks for counter body and tray slide.

3. (V) – 6" high stainless steel legs with adjustable bullet feet. Stainless steel skirting on front and exposed sides.

4. (Q) –15-amp convenience outlet mounted below top in counter body. Provide die-raised opening in top for power cord access.

5. Cashier's utility drawer with locking provision mounted on end.

6. Cord and plug set. Double cord hooks on bottom of unit.

7. Standard counter working height of 36" A.F.F. Turn top down to align & interlock with adjacent solid top counter.

8. Front panels with decorative accent; design and color as selected by Architect, K.E.C. to verify.

ITEM #38: CASH REGISTER -- (N.I.C. - FURNISHED BY OWNER)

QUANTITY: Three (3)

ITEM #39: DROP-IN ICE CREAM MERCHANDISER

QUANTITY: Three (3)
MANUFACTURER: Silver King
MODEL NO.: SKED123-TL-1-BA1 (N058)
PERTINENT DATA: Drop-In, Hinged Lid
UTILITIES REQ'D: 2.7A, 120V, 1PH
ALTERNATE MFRS.: ColorPoint by Low-Temp Industries

Furnish and set-in-place per Equipment Plan, Sheet K-101; Manufacturer's Instructions and the following:

1. Accessories:
   -- #10315-08 lock bar kit, each unit.

2. Cord and plug set.

ITEM #40: AIR-SCREEN MERCHANDISER

QUANTITY: Three (3)
MANUFACTURER: Structural Concepts
MODEL NO.: DOS3623R (N058)
PERTINENT DATA: Drop-in, Self-Contained, Rear-Loading
UTILITIES REQ'D: 11.67A, 120V, 1PH; 3/4" IW
ALTERNATE MFRS.: None

Furnish and set-in-place per Equipment Plan, Sheet K-101; Manufacturer's Instructions, and the following:

1. Accessories:
   -- Shelf lights.
   -- Locking solid security cover, removable.
   -- 5-year compressor warranty.
   -- Hinged rear access doors with locks.

2. Cord and plug set.

3. Mount securely to Solid Top Counter, Item #37B.

4. GFCI receptacle to be located at building electrical panel. Furnished and installed by Electrical Contractor.

ITEM #41: MILK COOLER, MOBILE

QUANTITY: One (1)
MANUFACTURER: Continental
MODEL NO.: MC5-SS-D (N058)
PERTINENT DATA: 58" Wide, Dual Access, Forced-Air, 16-Crate Capacity
UTILITIES REQ'D: 1/3HP, 120V, 1PH
ALTERNATE MFRS.: True

Furnish and set-in-place per Equipment Plan, Sheet K-101; Manufacturer's Instructions and the following:

1. Stainless steel exterior and interior.

ITEM #41: (Continued)

2. Cord and plug set.

3. Cylinder lid lock.

4. Swivel casters with brakes.

5. Accessories:
   -- #5-223 corner bumpers.
   -- Foot pedal floor lock.
   -- Digital thermometer.
   -- Laminate finish to match Serving Counter.

ITEM #42: CONDIMENT COUNTER, MOBILE

QUANTITY: Two (2)
MANUFACTURER: Shelleysteel by The Delfield Company
MODEL NO.: SC-50-NU (N058)
PERTINENT DATA: Stainless Steel, #14GA Stainless Steel Top, With Storage Base
UTILITIES REQ'D: ----
ALTERNATE MFR.: ColorPoint by Low-Temp Industries; Piper Products

Furnish and set-in-place per Equipment Plan, Sheet K-101; Manufacturer's Shop Drawing and the following:

1. (A) - 10" wide full-length solid tray slides mounted on fold-down brackets mounted @ 29" A.F.F.

2. Enclosed understorage base with bottom and intermediate stainless steel shelf and stainless steel sliding doors with lock.

3. 5" diameter heavy-duty swivel casters, all four (4) with brakes.

4. Modified counter height set @ 30" A.F.F.

5. Front panels and exposed sides with decorative accent; design and color as selected by Architect, K.E.C. to verify.

ITEM #43: ELECTRONIC MENU BOARD -- (N.I.K.E.C. –FURNISHED BY OWNER)

QUANTITY: Two (2)

ITEM #44: TRASH CONTAINER, MOBILE

QUANTITY: Four (4)
MANUFACTURER: Rubbermaid Commercial Products, Inc.
MODEL NO.: FG263200GRAY (N058)
PERTINENT DATA: 32-Gallon Capacity
UTILITIES REQ'D: ----
ALTERNATE MFRS.: Continental Plastic

Furnish and set-in-place per Equipment Plan, Sheet K-101; Manufacturer's Instructions and the following:

1. Accessories:
   -- Four (4) #FG263100GRAY matching flat lids.
   -- Four (4) #FG264000BLA conversion dollies.

ITEM #45: POT WASHING SINK/SOILED DISHTABLE

QUANTITY:	One (1)
MANUFACTURER:	Custom Fabricated
MODEL NO.:	#14 GA Stainless Steel
PERTINENT DATA:	13'-6"± Long x 2'-6" Wide x 2'-10" High
UTILITIES REQ'D:	(2) 3/4" HW, (2) 3/4" CW, (3) 2" IW
ALTERNATE MFRS.:	None

Fabricate and set-in-place per Equipment Plan, Sheet K-101; Fabrication Detail, Sheet K-501 and the following:

Pot Washing Sink:

1. Front edge rolls per Detail 1.02B.

2. 13" high back and right end splash per Detail 1.04A.

3. Framework per Detail 1.05.

4. Legs per Detail 1.07.

5. Crossbracing per Detail 1.10.

6. Stainless steel undershelf on right end per Detail 1.11.

7. 8'-0" long stainless steel overshelf per Detail 1.12.

8. Pot sink and drainboards per Detail 3.01.

9. Sound-deaden underside of sinks and drainboards with NSF-approved sound dampening material.

10. Accessories:
    -- Two (2) T&S #B-0290 backsplash mounted swing spout faucets.
    -- Three (3) T&S #B-3950-01 twist waste valves with overflow assemblies and #010387-45 basket strainers.

11. Item will remain shrink-wrapped until ready for final connection by Plumbing Contractor. Immediately following completion of final connections, K.E.C. shall re-shrink-wrap tubs or provide removable panel to avoid use by construction trades. Post sign on wall above sink tubs in English and Spanish stating: WARNING! NOT TO BE USED BY CONSTRUCTION TRADES. FAILURE TO COMPLY WILL RESULT IN $500.00 FINE AND ALL COSTS TO REPLACE ITEM WITH NEW.

Soiled Dishtable:

1. Front edge roll per Detail 1.02B.

2. 13" high backsplash per Detail 1.04A.

3. Framework per Detail 1.05.

4. Legs per Detail 1.07.

5. Soiled dishtable per Detail 2.02.

6. Table trough at entrance to dishmachine per Detail 2.03.

7. Weld disposer cone to underside of left-hand drainboard.

8. Stainless steel disposer switch bracket.

ITEM #45: (Continued)

9. Sound-deaden underside of sink and drainboard with NSF-approved sound dampening material.

10. Accessories:
    -- One (1) T&S #B-0133 backsplash-mounted pre-rinse spray with built-in back flow preventer and #B-0109 wall bracket.

ITEM #46: POT & PAN SHELVING, MOBILE

QUANTITY: One (1)
MANUFACTURER: InterMetro Industries Corporation
MODEL NO.: MetroMax i (N058)
PERTINENT DATA: Open Grid Shelf, Polymer
UTILITIES REQ'D: ----
ALTERNATE MFR.: None

Furnish and set-in-place per Equipment Plan, Sheet K-101, Manufacturer's Instructions and the following:

1. One (1) #MX2448G section; 24" W x 48" L x 4-tier high.

2. Four (4) #MX63UP polymer posts for stem casters, 63" high.

3. Two (2) #5MPX polyurethane swivel casters with donut bumpers.

4. Two (2) #5MPBX polyurethane casters with brakes and donut bumpers.

5. Plastic wedge lock connectors, quantity as required.

6. Locate bottom shelf @ 18" A.F.F., space remaining shelves equally.

7. Accessories:
    -- Two (2) #MTR2448XE tray drying racks.
    -- Ten (10) #MXD24-8 shelf dividers.

ITEM #47: DISPOSER

QUANTITY: One (1)
MANUFACTURER: In-Sink-Erator
MODEL NO.: SS-200-12C-AS101 (N058)
PERTINENT DATA: 12" Diameter Cone Assembly
UTILITIES REQ'D: 2 HP, 480V, 3PH; 1/2" CW, 2" W
ALTERNATE MFRS.: Salvajor

Furnish and install per Equipment Plan, Sheet K-101; Manufacturer's Instructions and the following:

1. #AS-101 Aqua saver control mounted on 14 GA stainless steel bracket.

2. Weld cone to underside of left-hand drainboard, Item #45.

3. Accessories:
    -- One (1) T&S Model #B-0455 vacuum breaker in lieu of standard unit.

ITEM #48: DISHMACHINE

QUANTITY:	One (1)
MANUFACTURER:	Hobart Corporation
MODEL NO:	AM-15T (N058)
PERTINENT DATA:	Fully-Automatic, High-Temp, Door-Type, With Built-in Booster Heater (70°F Rise), Tall Series
UTILITIES REQ'D:	23.6A, 480V, 3PH; 10.0A, 120V, 1PH; 3/4"HW (140°F.), 1/2"CW (Drain Water Cooling Kit), 1-1/2" IW
ALTERNATE MFRS:	Meiko

Furnish and set-in-place per Equipment Plan, Sheet K-101; Manufacturer's Instructions and the following:

1. Factory installed vacuum breaker.

2. Soap dispensing system and rinse additive system.

3. Stainless steel feet, frame, legs and front panel.

4. Electric tank heat.

5. Straight-thru installation.

6. Vent fan control.

7. Accessories:
   - -- Two (2) #DISHRAK-PEG20 peg-type dish racks.
   - -- Two (2) #DISHRAK-COM20 combination-type dish racks.
   - -- One (1) #DWT-AM15 drain water tempering kit.
   - -- One (1) built-in booster heater.
   - -- One (1) WTRHAM-ARREST water hammer arrestor kit with brass pressure regulator valve.
   - -- One (1) SPEC-KIT single-point electrical connection.
   - -- One (1) PRESREG-3/40BR ¾" brass pressure regulator.
   - -- Two (2) sheet pan racks.

ITEM #49: CONDENSATE CANOPY

QUANTITY:	One (1)
MANUFACTURER:	Captive-Aire Systems, Inc.
MODEL NO:	4230VHB-G (N058)
PERTINENT DATA:	Stainless Steel, Exhaust Only Canopy
UTILITIES REQ'D:	525 CFM; 3/4" IW
ALTERNATE MFRS:	Avtec; Gaylord, Caddy

Fabricate and install per Equipment Plan, Sheet K-101; Canopy Details, Sheet K-503 and the following:

1. 3'-6" wide x 3'-6" long x 2'-6" high with bottom edge mounted at 6'-8" A.F.F. Entire unit constructed of 18 GA type 304 stainless steel with #4 finish on all exposed surfaces.

2. 2" wide full perimeter integral gutter with 1/2" turn-up and 3/4" stainless steel drain connection.

3. Integral stainless steel rod hanger brackets, each corner.

4. Stainless steel duct tap collar with removable aluminum mesh filter.

5. Stainless steel perimeter closure panels to finished ceiling by K.E.C.; verify ceiling height.

ITEM #49: (Continued)

6. Accessories:
   -- #18 gauge stainless steel wall flashing full length of hood to extend from top of finish floor coved base up to bottom edge of hood body. Attach to wall with non-exposed fasteners and seal with clear silicone sealant.
   -- Field wrapper.

ITEM #50: CLEAN DISHTABLE

QUANTITY: One (1)
MANUFACTURER: Custom Fabricated
MODEL NO.: #14 GA Stainless Steel
PERTINENT DATA: 6'-6"± Long x 2'-6" Wide x 2'-10" High
UTILITIES REQ'D: ----
ALTERNATE MFRS: None

Fabricate and set-in-place per Equipment Plan, Sheet K-101; Fabrication Detail, Sheet K-501, and the following:

1. Front and left end edge roll per Detail 1.02B.

2. 13" high back and partial left end splash per Detail 1.04A.

3. Framework per Detail 1.05.

4. Legs per Detail 1.07.

5. Stainless steel undershelf per Detail 1.11.

6. 5'-0" long stainless steel overshelf per Detail 1.12.

7. Dishtable per Detail 2.02.

8. Sound-deaden underside of drainboard with NSF-approved sound dampening material.

ITEM #51: MOP SINK & RACK

QUANTITY: One (1)
MANUFACTURER: Eagle Group
MODEL NO.: F1916 (N058)
PERTINENT DATA: Floor Mounted, Stainless Steel
UTILITIES REQ'D: 1/2" HW, 1/2" CW, 2" W
ALTERNATE MFRS.: Advance/Tabco; IMC/Teddy

Furnish and set-in-place per Equipment Plan, Sheet K-101; Manufacturer's Instructions and the following:

1. Accessories:
   -- One (1) #312690 service sink wall faucet.

   -- One (1) #321561 mop holder.
   -- One (1) #312689 hose and bracket assembly.

2. K.E.C. to furnish #16 gauge stainless steel wall flashing along two (2) walls adjacent sink, 48" high. Attach to wall with non-exposed fasteners and seal to wall and sink.

ITEM #52: SHELVING

QUANTITY: One (1)
MANUFACTURER: InterMetro Industries Corporation
MODEL NO.: MetroMaxQ (N058)
PERTINENT DATA: Five-Tier High, Free-Standing, Polymer
UTILITIES REQ'D: ----
ALTERNATE MFRS.: None

Furnish and set-in-place per Equipment Plan, Sheet K-101; Manufacturer's Instructions and the following:

Soap Storage:

1. One (1) #MQ1842G section; 18" W x 42" L x 5-tier high.

2. Four (4) #MQ74PE polymer posts; 74" high.

3. Plastic wedge lock connectors, quantity as required.

4. Locate bottom shelf @ 12" A.F.F.; space remaining shelves equally.

ITEM #53: WASHER -- (N.I.K.E.C.) – FURNISHED BY OWNER

QUANTITY: One (1)

ITEM #54: DRYER -- (N.I.K.E.C.) – FURNISHED BY OWNER

QUANTITY: One (1)

ITEM #55: ADA HAND SINK

QUANTITY: One (1)
MANUFACTURER: Eagle Foodservice Equipment Company
MODEL NO.: HSAP-14-ADA-FE-B (N058)
PERTINENT DATA: Wall-Mounted Special Purpose - Hands Free ADA Type
UTILITIES REQ'D: 1/2" HW, 1/2" CW, 1-1/2" W
ALTERNATE MFR.: Advance/Tabco

Furnish and set-in-place per Equipment Plan, Sheet K-101; Manufacturer's Instructions and the following:

1. Physically challenged unit furnished complete with splash mounted battery-powered electronic-eye faucet with low battery indicator light, basket drain, front loading C-fold paper towel dispenser, deck-mounted soap dispenser, stainless steel skirt and stainless steel wall brackets.

2. Accessories:
   -- One (1) #326015 temperature adjustment valve.
   -- One (1) #326696 anti-scald valve.
   -- Left and right side splashes.

ITEM #56: ELECTRIC WEIGHING SCALE

QUANTITY: One (1)
MANUFACTURER: Edlund Company, Inc.
MODEL NO.: EDL-10 OP (N058)
PERTINENT DATA: Countertop, Stainless Steel Construction
UTILITIES REQ'D: ----
ALTERNATE MFRS.: None

Furnish and set-in-place per Equipment Plan, Sheet K-101 and Manufacturer's Instructions.

ITEM #57: ELECTRIC CAN OPENER

QUANTITY: One (1)
MANUFACTURER: Edlund Company, Inc.
MODEL NO.: 270B (N058)
PERTINENT DATA: Countertop, Dual-Speed, 200 Cans/Day Capacity
UTILITIES REQ'D: 1.5A, 120V, 1PH
ALTERNATE MFRS.: None

Furnish and set-in-place per Equipment Plan, Sheet K-101; Manufacturer's Instructions and the following:

1. Cord and plug set.

ITEM #58: FRUIT SECTIONIZER

QUANTITY: One (1)
MANUFACTURER: Sunkist
MODEL NO.: S-105
PERTINENT DATA: 3-in-1, 2 HALVES scored in 3 wedges ea., NSF Listed
UTILITIES REQ'D: ----
ALTERNATE MFRS.: None

Furnish and set-in-place per Equipment Plan, Sheet K-101; Manufacturer's Instructions and the following:

1. Accessories:
   - -- 6 slice Blade cup, w/cover, fits S-10 (S-4B)
   - -- Plunger slicer, fits part S-04, 6 wedge blade cup (S-10)
   - -- 8 wedge blade cup (S-29B)
   - -- Apple Plunger, fits S-32 (S-33, S-32)
   - -- Apple corer cup, fits S-33 (S-32B)
   - -- Plastic production stand (S-31)

ITEM #59: TILT TRUCK, MOBILE

QUANTITY: One (1)
MANUFACTURER: SpecialMade
MODEL NO.: SMFG130400BLA
PERTINENT DATA: Rotational Molded, Utility Duty, 450 lb. capacity
UTILITIES REQ'D: ----
ALTERNATE MFRS.: None

Furnish and set-in-place per Equipment Plan, Sheet K-101 and Manufacturer's Instructions.

ITEM #60: PLATFORM TRUCK, MOBILE

QUANTITY:	One (1)
MANUFACTURER:	Rubbermaid
MODEL NO.:	FG440100BLA
PERTINENT DATA:	Triple Trolley, Standard Duty, 500 lb. capacity
UTILITIES REQ'D:	----
ALTERNATE MFRS.:	None

Furnish and set-in-place per Equipment Plan, Sheet K-101 and Manufacturer's Instructions.

(END OF FOODSERVICE ITEMIZED SPECIFICATIONS)

STANDARD DETAILS

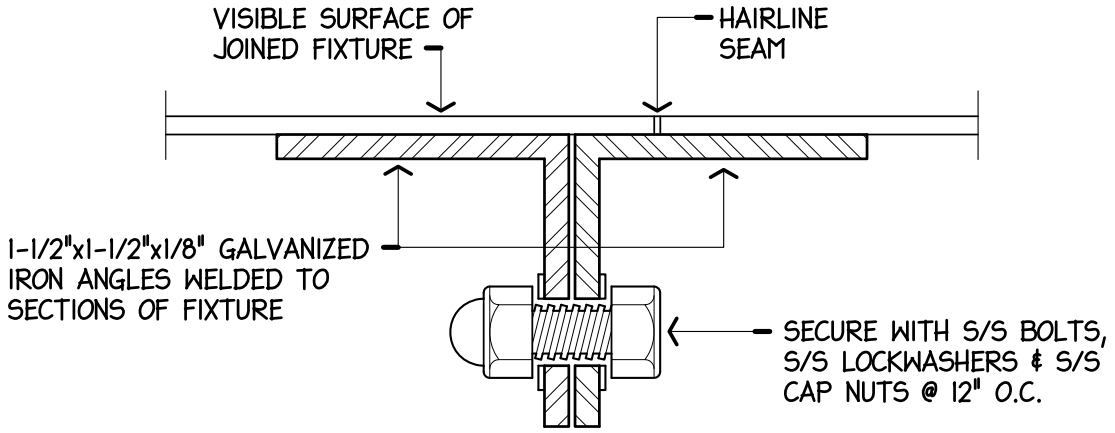

NOTE! JOINED SECTIONS SHALL BE DRAWN TOGETHER LEAVING ONLY A HAIRLINE SEAM.

A. BOLT DRAWN JOINT

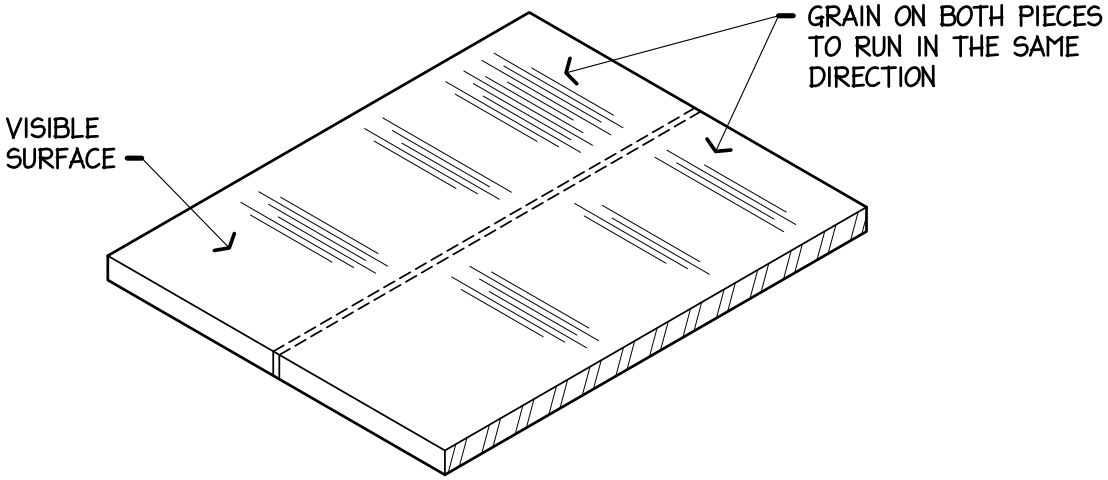

NOTE! ON FIXTURES SPECIFIED WITH WELDED FIELD JOINTS, WELDS SHALL BE CONTINUOUS, GROUND & POLISHED LEAVING NO VISIBLE EVIDENCE OF WELD.

B. WELDED BUTT JOINT

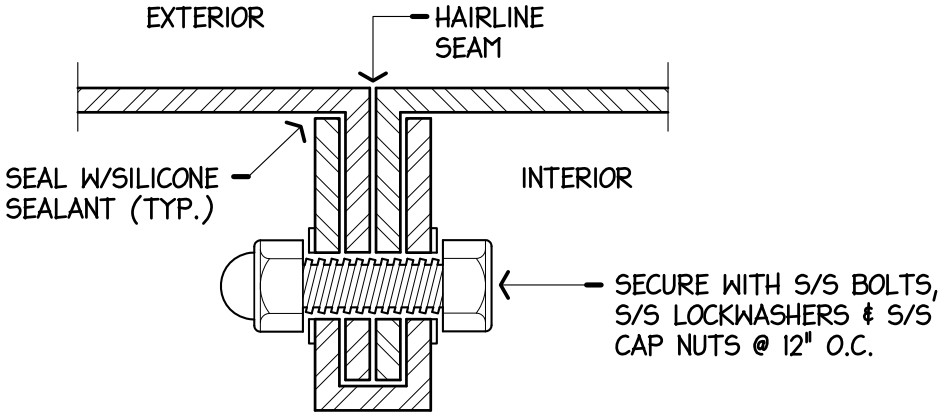

NOTE! JOINED SECTIONS SHALL BE DRAWN TOGETHER LEAVING ONLY A HAIRLINE SEAM.

C. RAISED CAP SEAM - KNUCKLE JOINT

NYIKOS ASSOCIATES, INC. Food Facilities Design/Consulting	DESCRIPTION: FIELD JOINTS & ASSEMBLY	STANDARD DTL: 1.01 PAGE: 114000-56

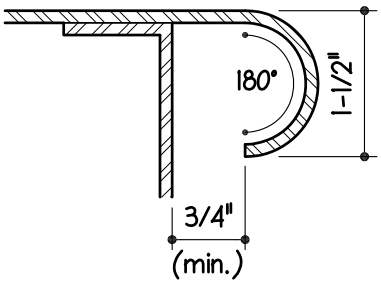

ROLLED A.

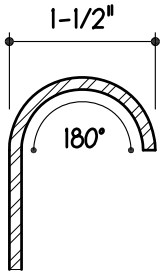

RAISED ROLLED B.

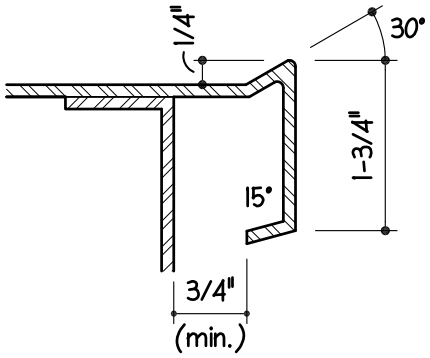

INVERTED "V" EDGE C.

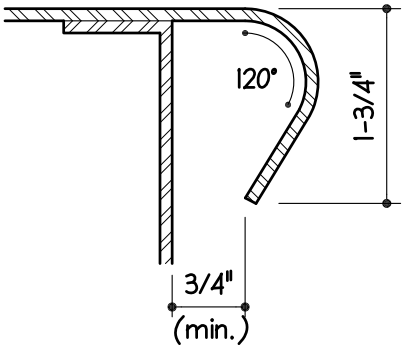

BULL NOSE ROLLED D.

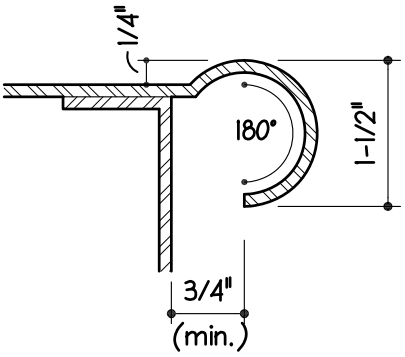

MARINE EDGE E.

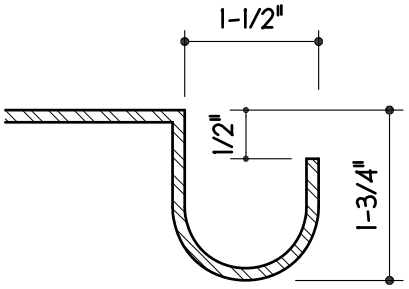

FLOUR GUTTER F.

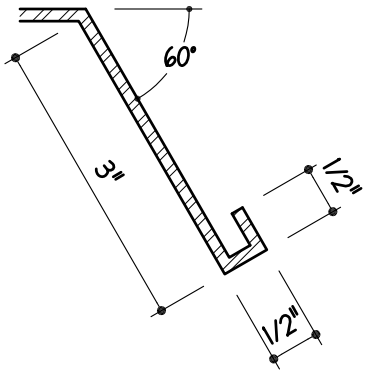

RECIPE CARD HOLDER G.

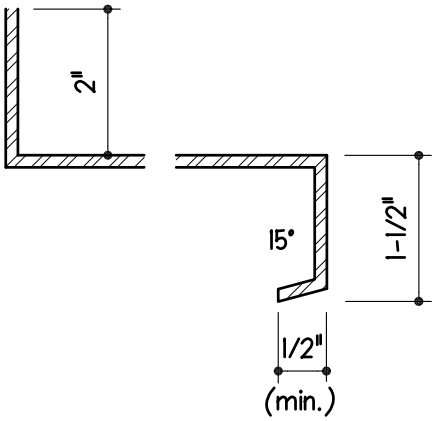

UNDERSHELF EDGE H.

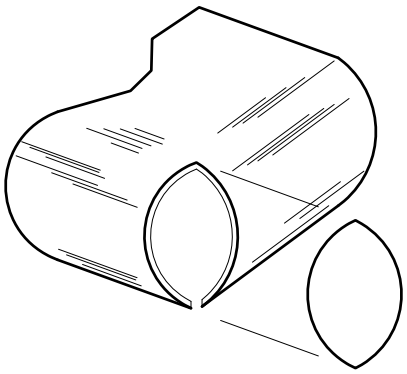

BULL NOSE CORNER I.

NYIKOS ASSOCIATES, INC. Food Facilities Design/Consulting	DESCRIPTION: EDGES	STANDARD DTL: 1.02 PAGE: 114000-57

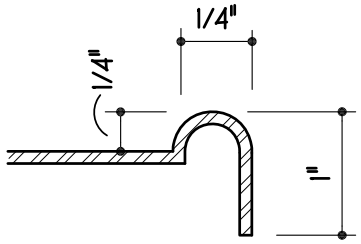

RAISED OPENING EDGE J.

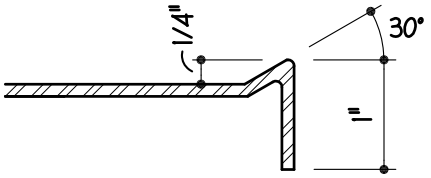

RAISED OPENING EDGE K.

a. AS SPECIFIED. TO MATCH ADJACENT ROLLED EDGES

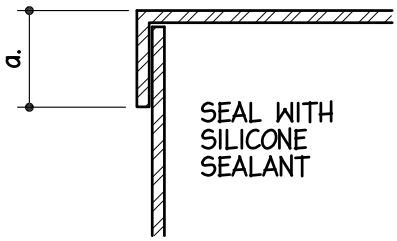

STRAIGHT TURN DOWN L.

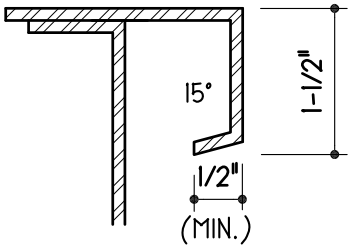

TURNED DOWN EDGE M.

NYIKOS ASSOCIATES, INC.
Food Facilities Design/Consulting

DESCRIPTION:

EDGES

STANDARD DTL: 1.02.1

PAGE: 114000-58

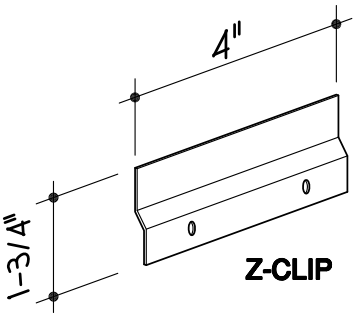

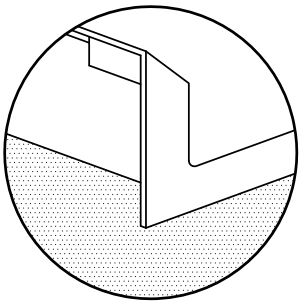

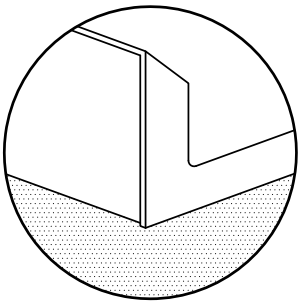

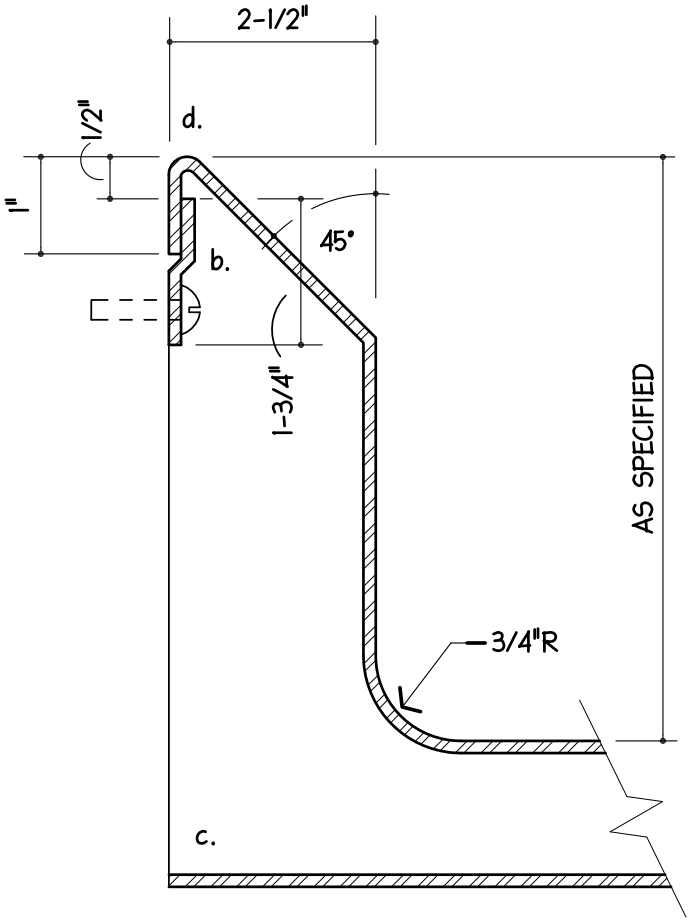

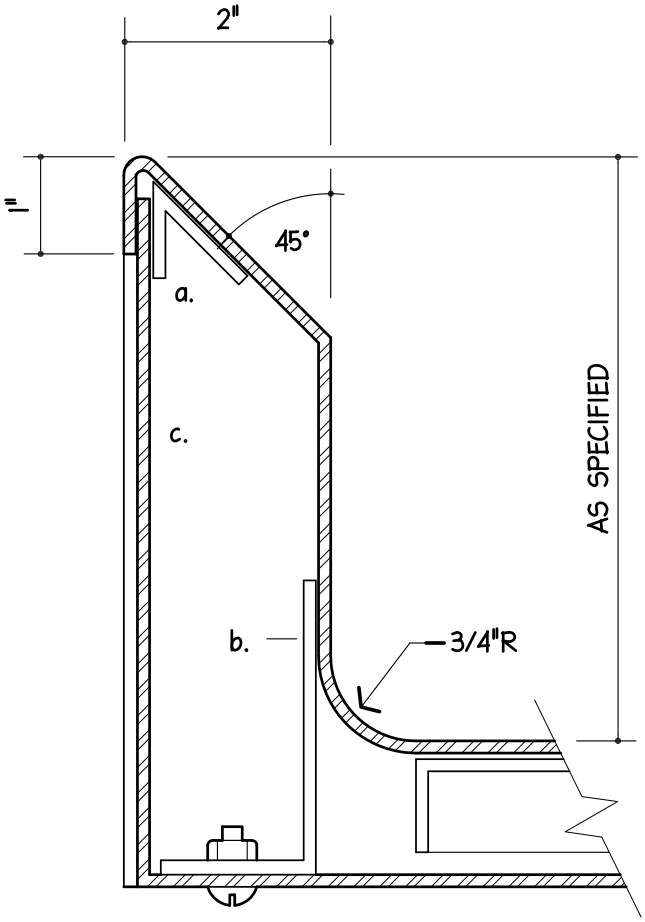

WALL UNIT

DETAIL A

a. 2-1/2" AT SINK TO ALLOW FOR CONNECTED OVERFLOW

b. 12 GA. S/S CLIPS, 4" LONG, FASTENED TO EACH WALL END OF EACH UNIT ¢ 4'-0" ON CENTER. SECURE TO WALL W/A MINIMUM OF TWO 1/4"x20 S/S TOGGLE BOLTS OR EXPANSION SHIELDS.

c. EXPOSED ENDS TO BE FULLY WELDED CLOSED.

d. SEAL ALL AROUND TO WALL WITH SILICONE SEALANT.

FREE STANDING UNIT

DETAIL B

a. 1"x1"x14 GA. S/S x1-1/2"LONG RETAINING CLIP WELDED IN PLACE. ONE AT EACH END OF UNIT AND 12" ON CENTER.

b. 2-1/2"x1-1/2x1-1/2" 14 GA.S/S CLIP WELDED TO SPLASH. ONE AT OF EACH UNIT ¢ 12" ON CENTER.

c. 14 GA S/S PANEL SECURED TO CLIPS W/ S/S OVALHEAD BOLT. WELD NUT TO CLIP.

d. EXPOSED ENDS TO BE FULLY WELDED.

NYIKOS ASSOCIATES, INC. Food Facilities Design/Consulting	DESCRIPTION: BACKSPLASHES	STANDARD DTL: 1.04 PAGE: 114000-59

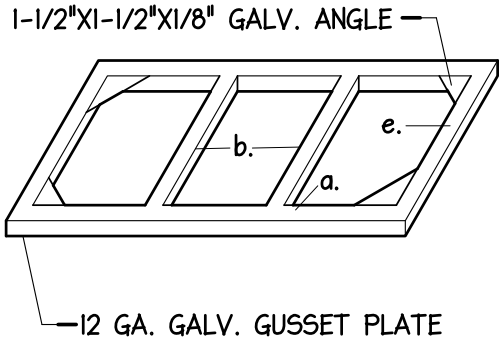

TABLES

A.

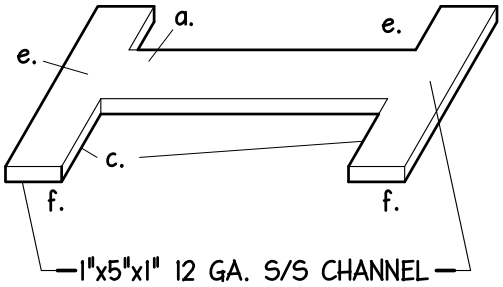

DISHTABLES

B.

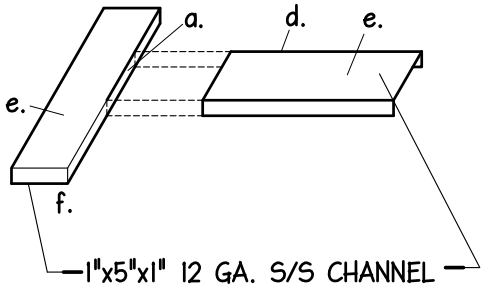

SINK DRAINBOARDS

C.

a. FULLY WELDED CONSTRUCTION.

b. ANGLE LOCATION - ENDS; SIDES OF TOP INSETS; INTERMEDIATES 24" ON CENTER.

c. CHANNEL LOCATION - ENDS AND INTERMEDIATE MAXIMUM 6'-6" O.C.

d. ADD CENTER CHANNEL WHEN DRAINBOARD LENGHT EXCEEDS 5'-6".

e. SECURE TOP TO FRAMEWORK WITH WELDED STUDS, S/S LOCKWASHERS AND CAP NUTS.

f. CLOSE CHANNEL AT FRONT ONLY.

NYIKOS ASSOCIATES, INC. Food Facilities Design/Consulting	DESCRIPTION: TABLE & DRAINBOARD FRAMEWORK	STANDARD DTL: 1.05 PAGE: 114000-60

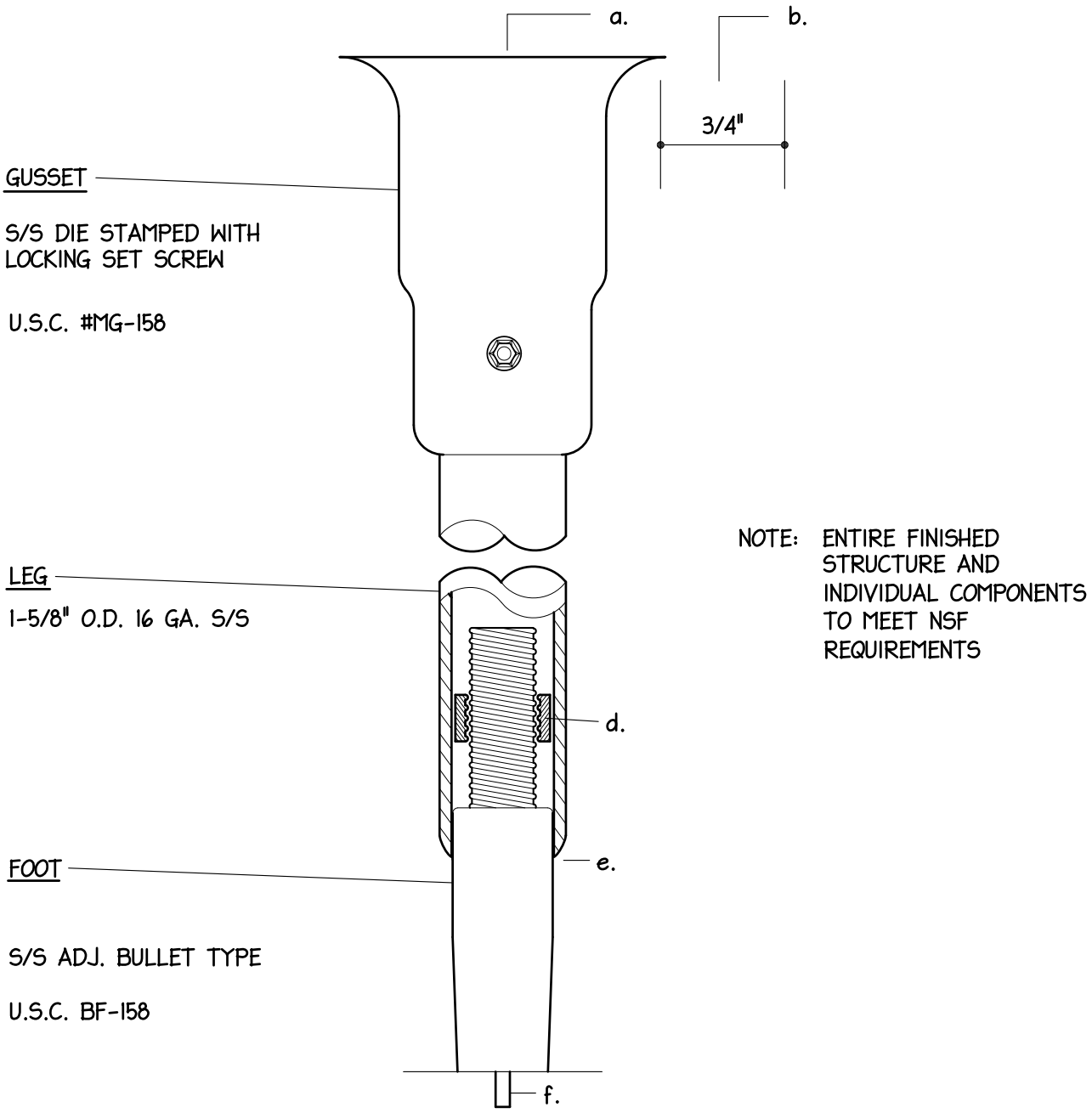

a. FULLY WELD GUSSET TO FRAMEWORK OR SINK

b. 3/4" MINIMUM CLEARANCE ALL AROUND

c. SET SCREW NOT VISIBLE TO WORKING SIDE OF EQUIPMENT.

d. MAXIMUM 1/32" CLEARANCE BETWEEN LEG AND FOOT

e. FOOT SET AT MIDPOINT TO ALLOW 1" ADJUSTMENT UP AND 1" DOWN. WITHOUT THREAD EXPOSURE.

f. LEGS UNSUPPORTED LATERALLY BY CROSSBACKING OR UNDERSHELVES SHALL BE PINNED TO FLOOR USING 1/4" DIA. X 1/2" PINS WELDED TO FOOT AND SET IN MATCHING HOLES IN THE FLOOR.

NYIKOS ASSOCIATES, INC. Food Facilities Design/Consulting	DESCRIPTION: TABLE & SINK LEGS	STANDARD DTL: 1.07 PAGE: 114000-61

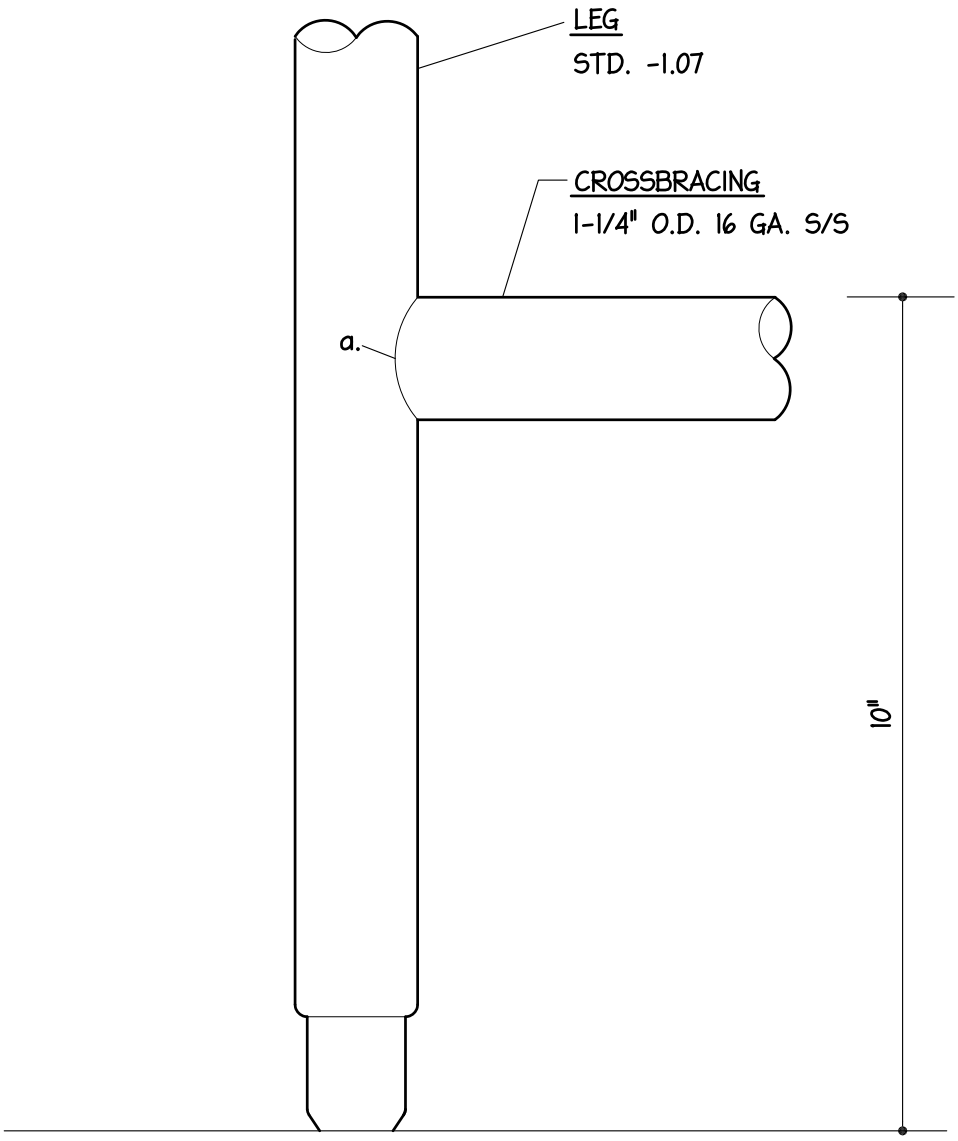

a. FULLY WELD, GRIND SMOOTH AND POLISH.

NYIKOS ASSOCIATES, INC. Food Facilities Design/Consulting	DESCRIPTION: CROSSBRACING	STANDARD DTL: 1.10 PAGE: 114000-62

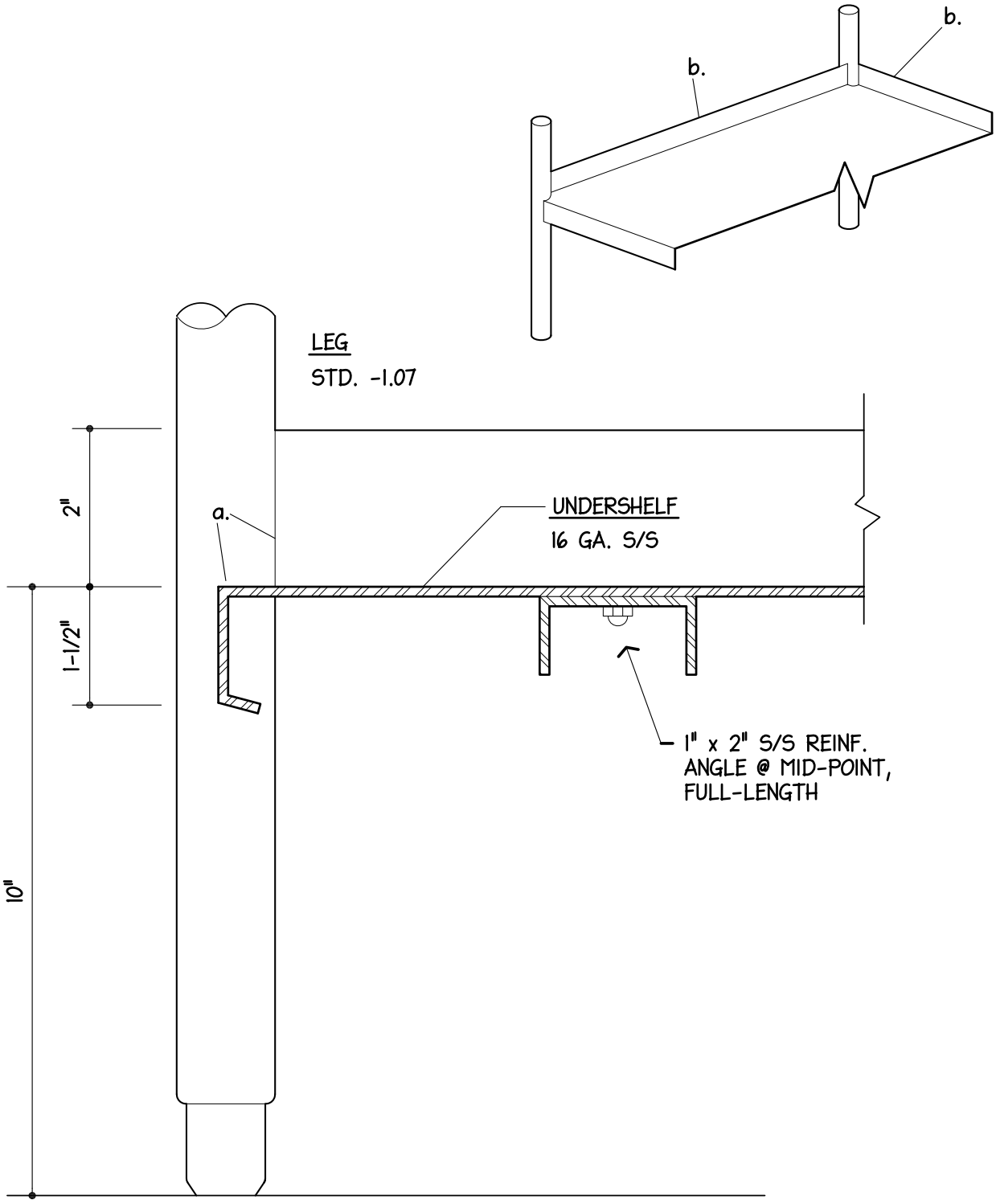

a. FULLY WELD, GRIND SMOOTH AND POLISH.

b. WHEN SPECIFIED, TURN REAR AND ENDS UP 2".

NYIKOS ASSOCIATES, INC. Food Facilities Design/Consulting	DESCRIPTION: UNDERSHELF	STANDARD DTL: 1.11 PAGE: 114000-63

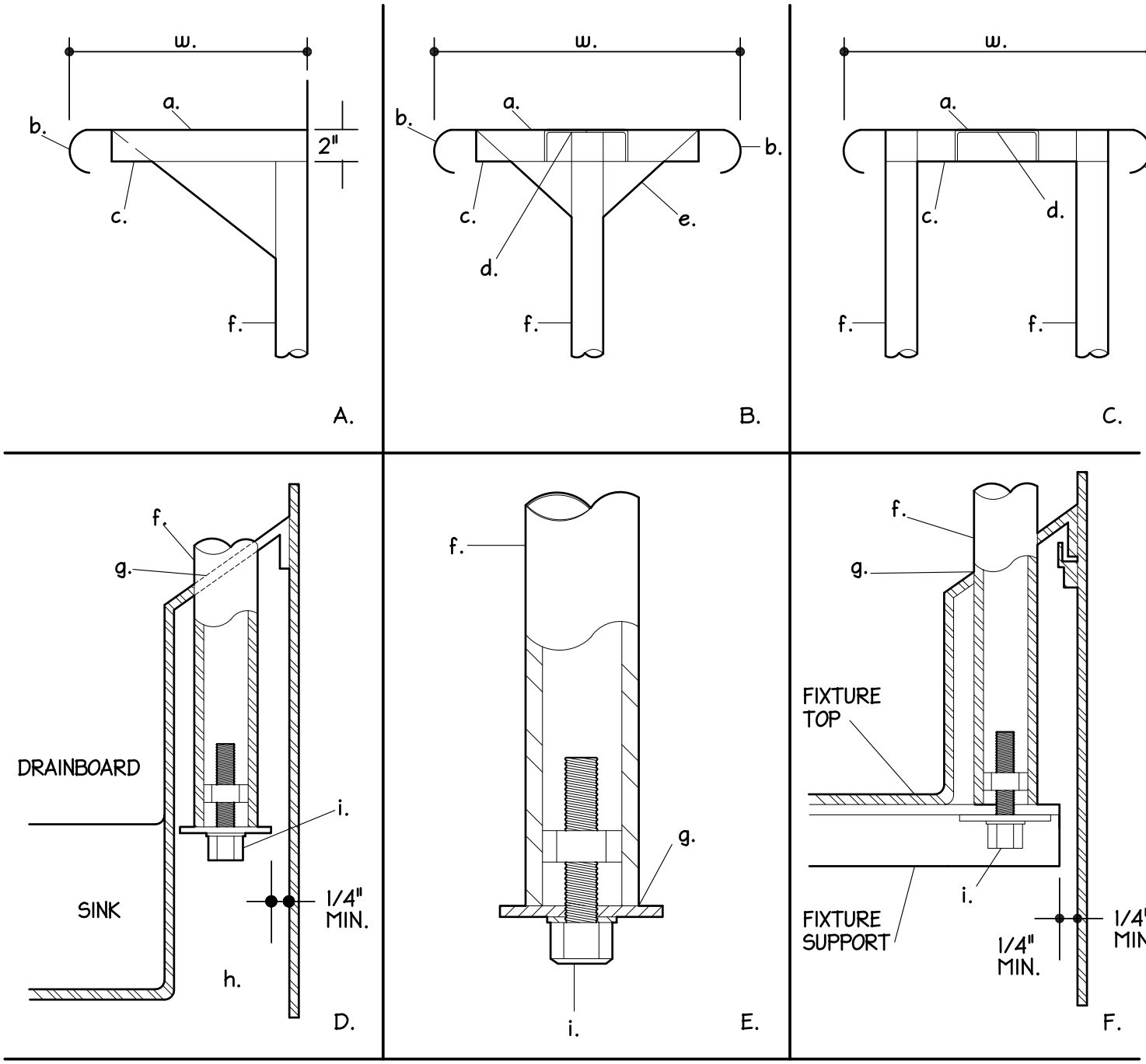

a. 16 GA S/S SHELF

b. STD.- 1.02 EDGE

c. 1"x 3"x 1" 14 GA. S/S CROSS CHANEL

d. 1'x 3"x 1" 14 GA. S/S LENGTHWISE CHANNEL WHEN LENGTH BETWEEN SUPPORTS EXCEEDS 42"

e. 14 GA. S/S BRACKETS FULLY WELDED TO SUPPORT AND CHANNEL..

f. 1-1/4" O.D. 16 GA. S/S UPRIGHT. MAXIMUM 5'-0" ON CENTER.

g. TIGHT FIT. SEAL WITH SILICONE SEALANT.

h. 1-1/2"x 1-1/2" 12 GA. S/S CLIPS WELDED TO REAR OF SPLASH AT DRAINBOARD HEIGHT.

i. 3/8"x 16 S.S. HEX HEAD BOLT, S/S NUT & S/S LOCKWASHER. NUT WELDED IN TUBE.

w. WIDTH AS SPECIFIED.

NYIKOS ASSOCIATES, INC. Food Facilities Design/Consulting	DESCRIPTION: **OVERSHELVES & SUPPORTS**	STANDARD DTL: **1.12** PAGE: **114000-64**

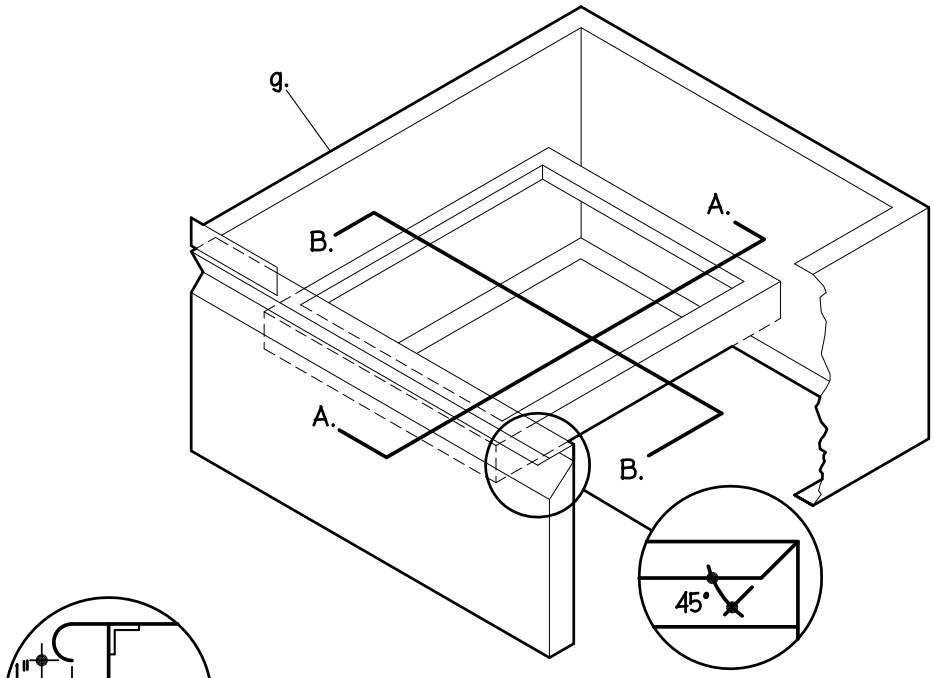

e. 16 GA. S/S ALL WELDED.

f. 3 PIECE SELF CLOSING DWR. SLIDE AS MFD. BY COMPONENT HARDWARE, S52 SERIES WITH S/S ROLLER BEARINGS. PITCH SLIDE DOWNWARD 3/8" PER FOOT FOR SELF-CLOSING ACTION.

g. 18 GA. S/S DWR. ENCLOSURE. ALL WELDED.

h. SEMI - RIGID FIBERGLASS SOUND DAMPENING.

j. HARD RUBBER DRAWER BUMPER EACH CORNER.

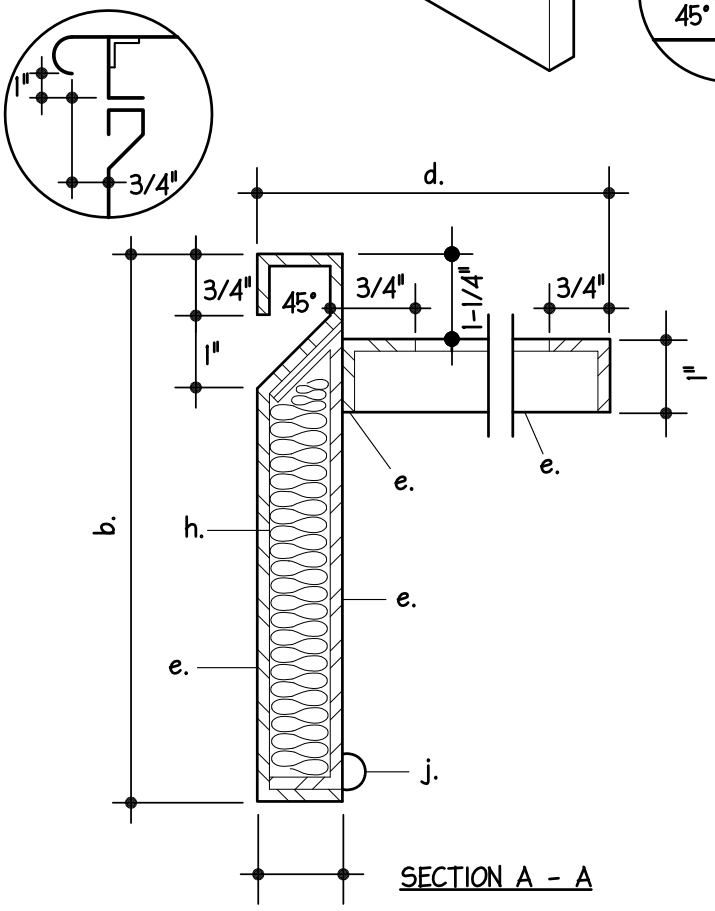

SECTION A - A

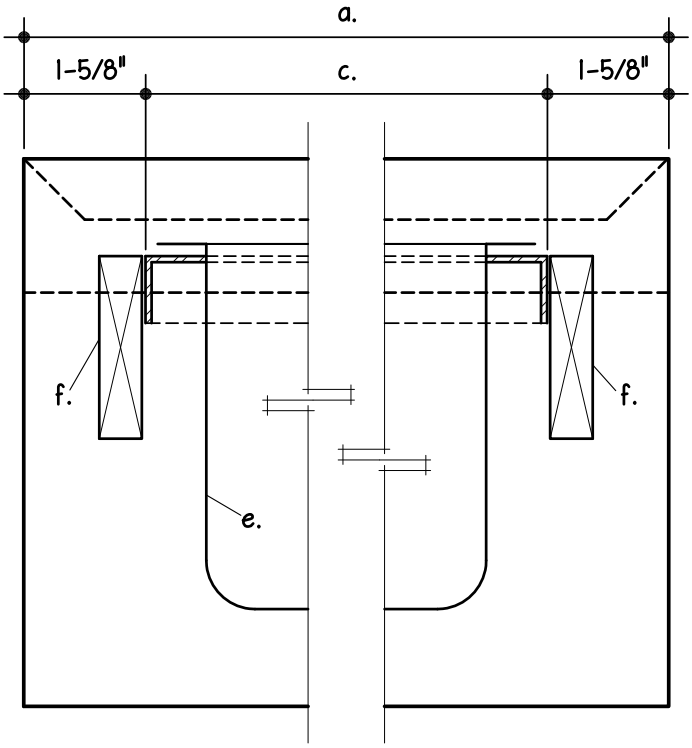

SECTION B -B

i. PROVIDE DIE - STAMPED #18 GA. S/S DWR. PANS AS FOLLOWS:

TYPE	NO.	PANS	a.	b.	c.	d.
I	1	20x20x5 DP.	25	7-1/2	21-3/4	22-3/4
II	1	20x20x8 DP.	25	10-1/2	21-3/4	22-3/4
III	1	12x20x4 DP.	25	6-1/2	21-3/4	14-1/2
IV	2	12x20x4 DP.	28	6-1/2	26-1/4	22-1/2
V	1	12x20x4 DP.	17	13-1/2	13-1/2	22-1/2

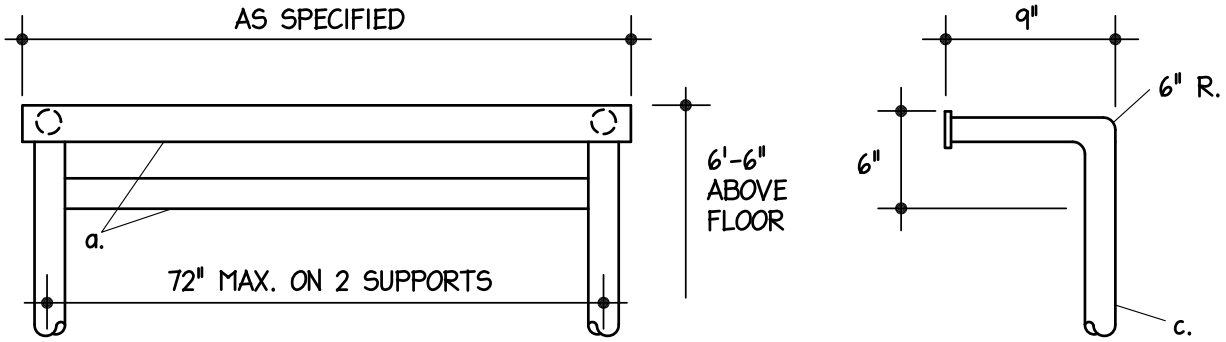

TABLE MTD. SINGLE SIDE a.

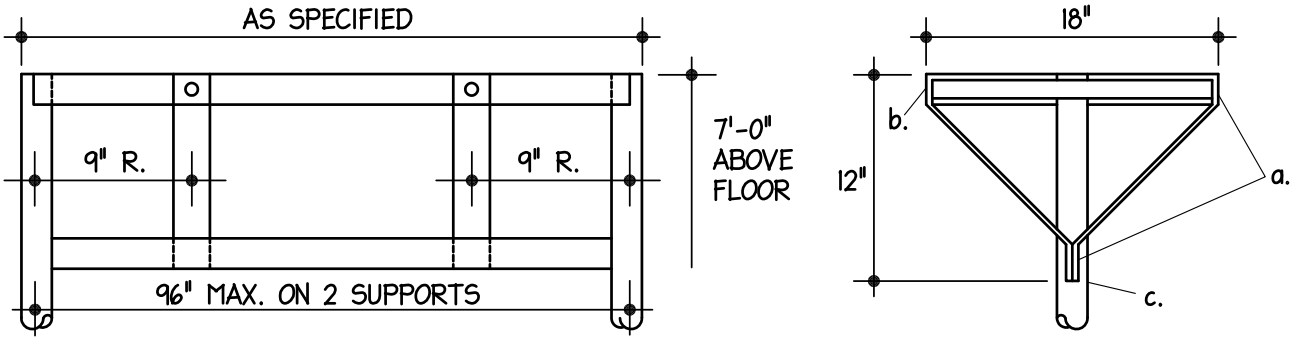

TABLE MTD. DOUBLE SIDE b.

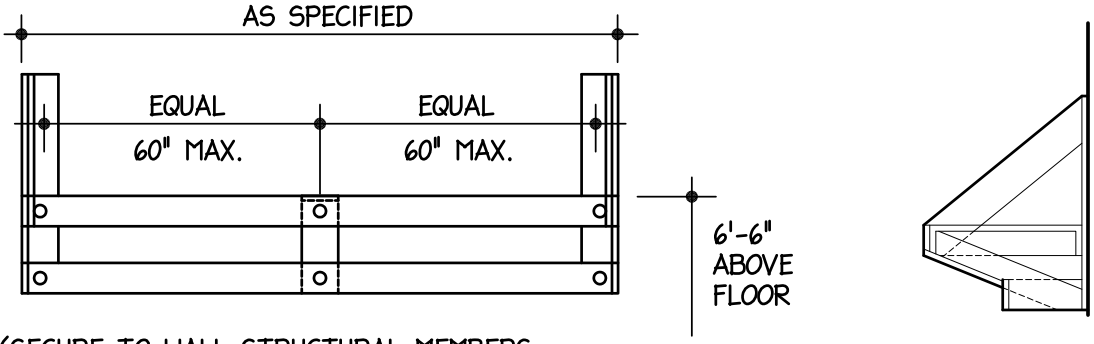

(SECURE TO WALL STRUCTURAL MEMBERS
WITH S/S BOLTS)

WALL MOUNTED c.

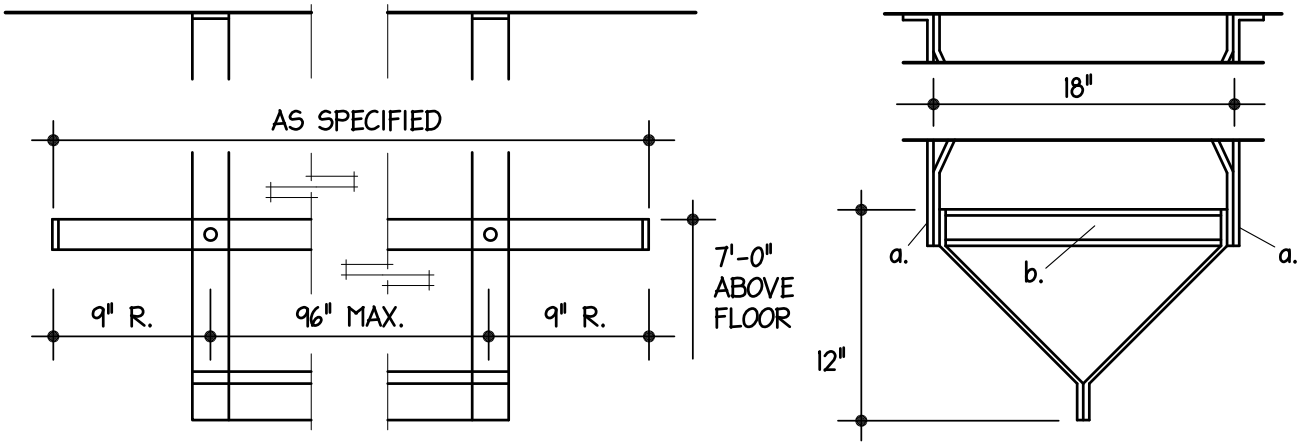

CEILING MOUNTED d.

RACKS TO BE ALL WELDED CONSTRUCTION, GROUND SMOOTH AND POLISHED

a. BANDS - 1/4"x2 S/S BAR.
b. SPREADERS - 1" O.D. 16 GA. S/S.
c. UPRIGHTS - 1-5/8" O.D. 16 GA. S/S.
d. HOOKS - S/S DOUBLE PRONG SNAP-OVER STANDARD KEIL - #1576-1010-1351, 6" O/C.

NYIKOS ASSOCIATES, INC. Food Facilities Design/Consulting	DESCRIPTION: POT RACKS	STANDARD DTL: 1.18 PAGE: 114000-66

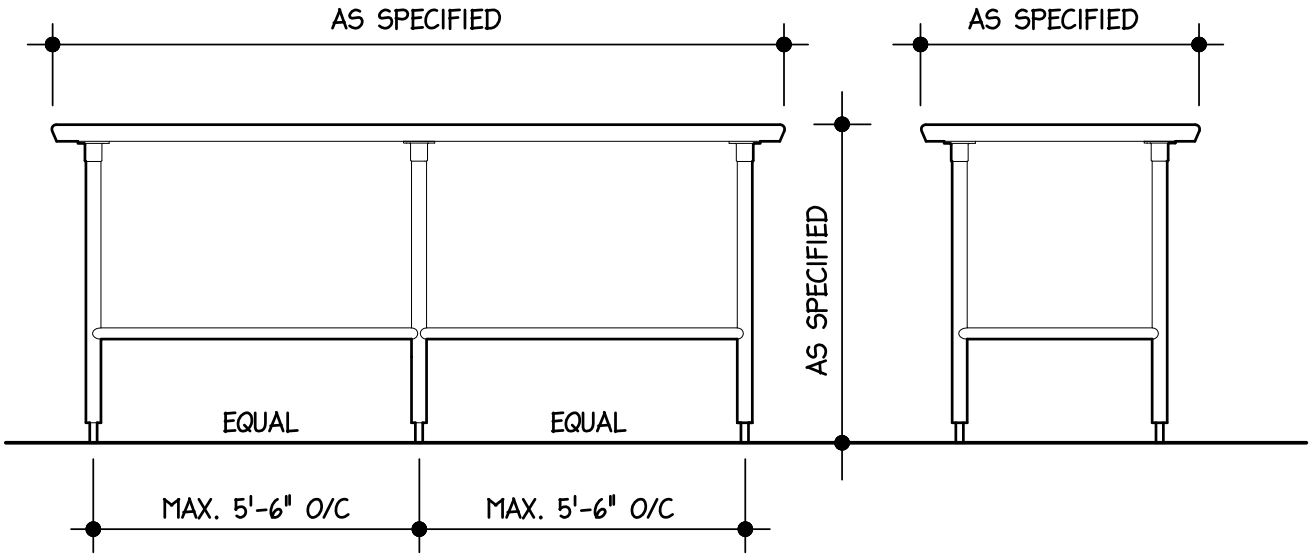

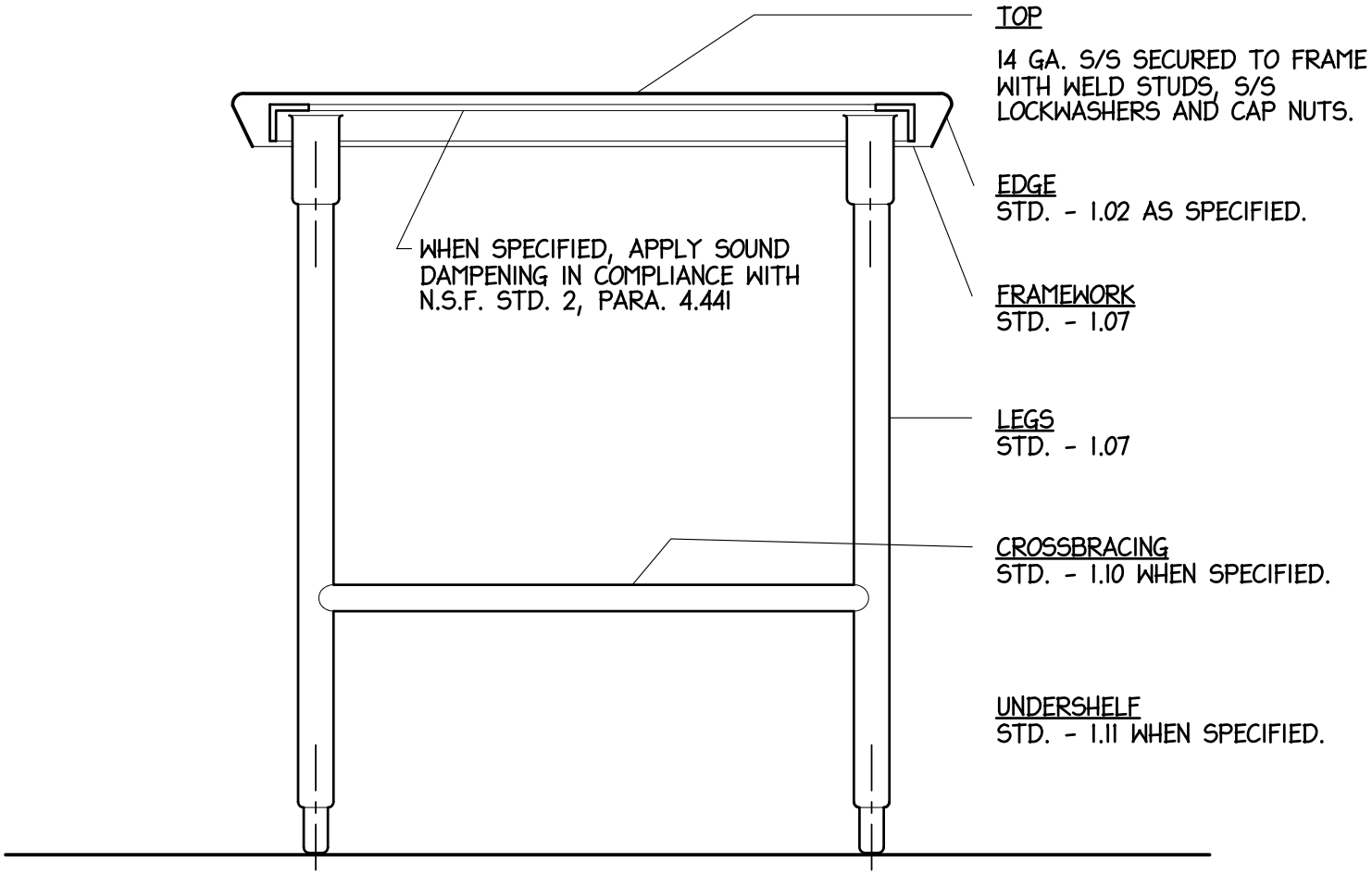

NYIKOS ASSOCIATES, INC. Food Facilities Design/Consulting	DESCRIPTION: **WORKTABLE**	STANDARD DTL: **2.01** PAGE: **114000-67**

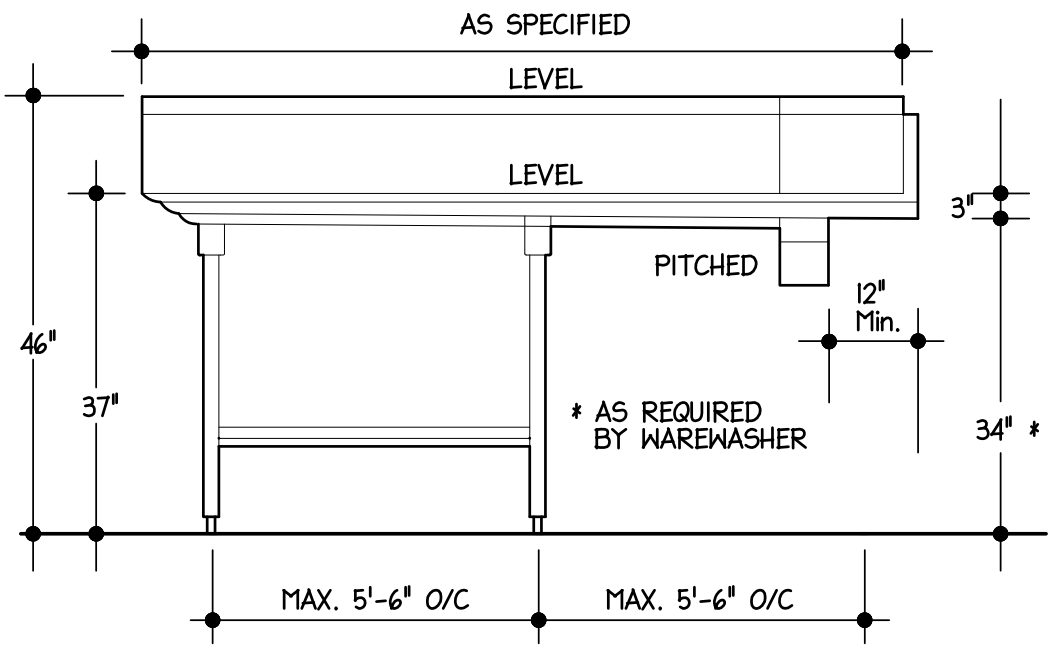

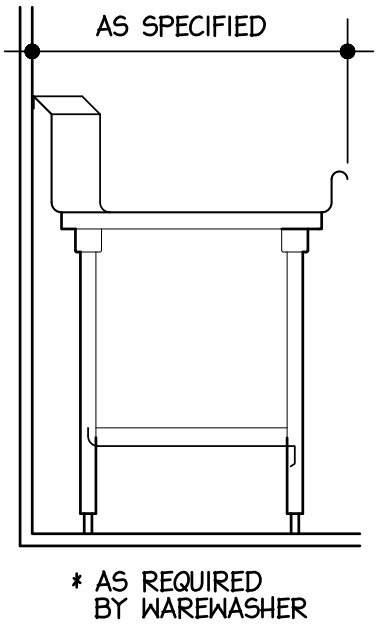

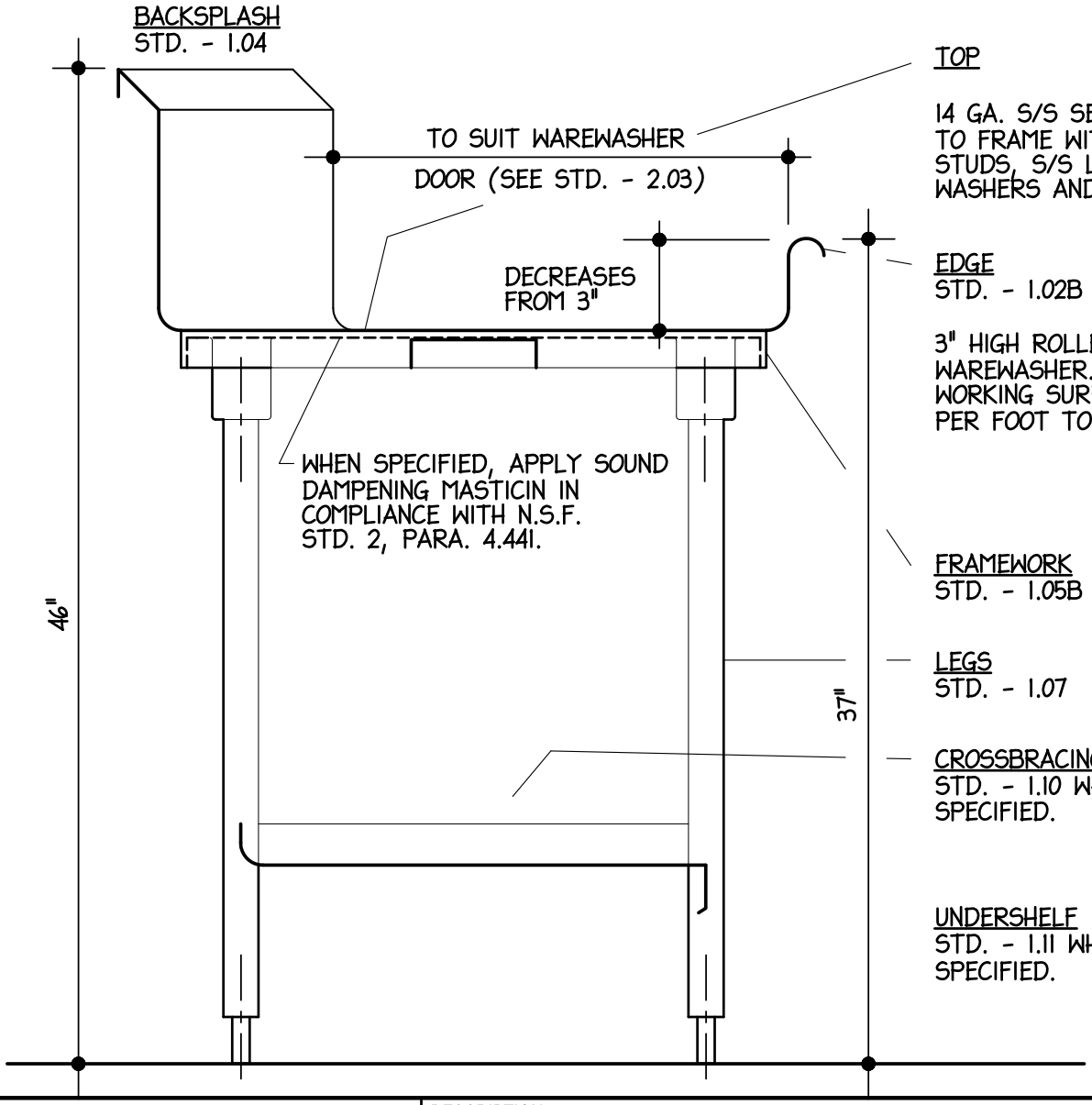

TOP

14 GA. S/S SECURED TO FRAME WITH WELDED STUDS, S/S LOCK-WASHERS AND CAP NUTS.

EDGE
STD. - 1.02B

3" HIGH ROLLED EDGE AT WAREWASHER. PITCH WORKING SURFACE 1/8" PER FOOT TO WAREWASHER.

FRAMEWORK
STD. - 1.05B

LEGS
STD. - 1.07

CROSSBRACING
STD. - 1.10 WHEN SPECIFIED.

UNDERSHELF
STD. - 1.11 WHEN SPECIFIED.

NYIKOS ASSOCIATES, INC. Food Facilities Design/Consulting	DESCRIPTION: DISHTABLE	STANDARD DTL: 2.02 PAGE: 114000-68

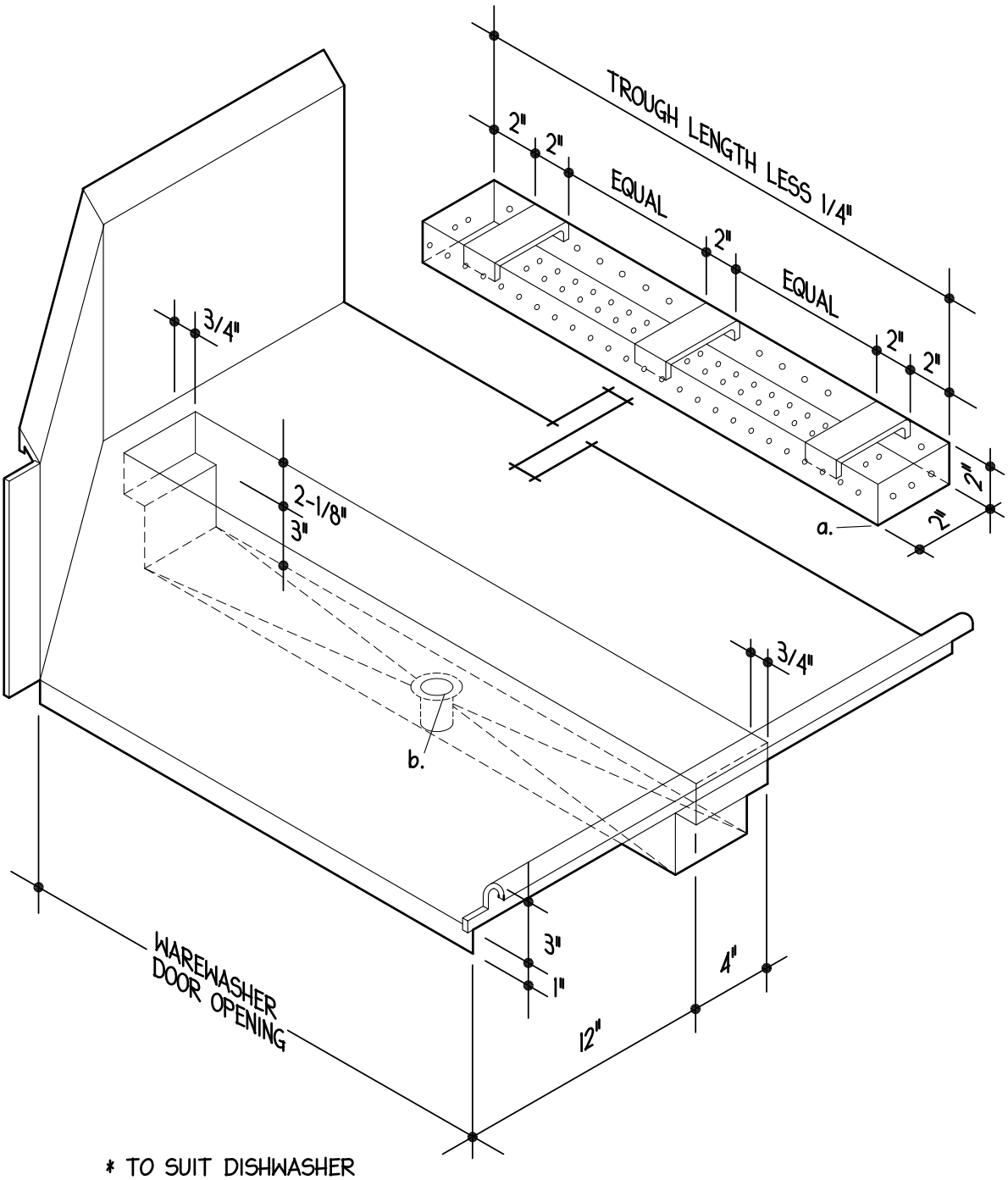

* TO SUIT DISHWASHER

a. BASKET - 16 GA. PERFORATED S/S, ALL WELDED CONSTRUCTION.

b. WASTE - 1-1/2" CHROME PLATED BRASS DRAIN -- STANDARD-KEIL #1816-1812-1368

NYIKOS ASSOCIATES, INC. Food Facilities Design/Consulting	DESCRIPTION: WAREWASHER CONNECTION AND TABLE TROUGH	STANDARD DTL: 2.03 PAGE: 114000-69

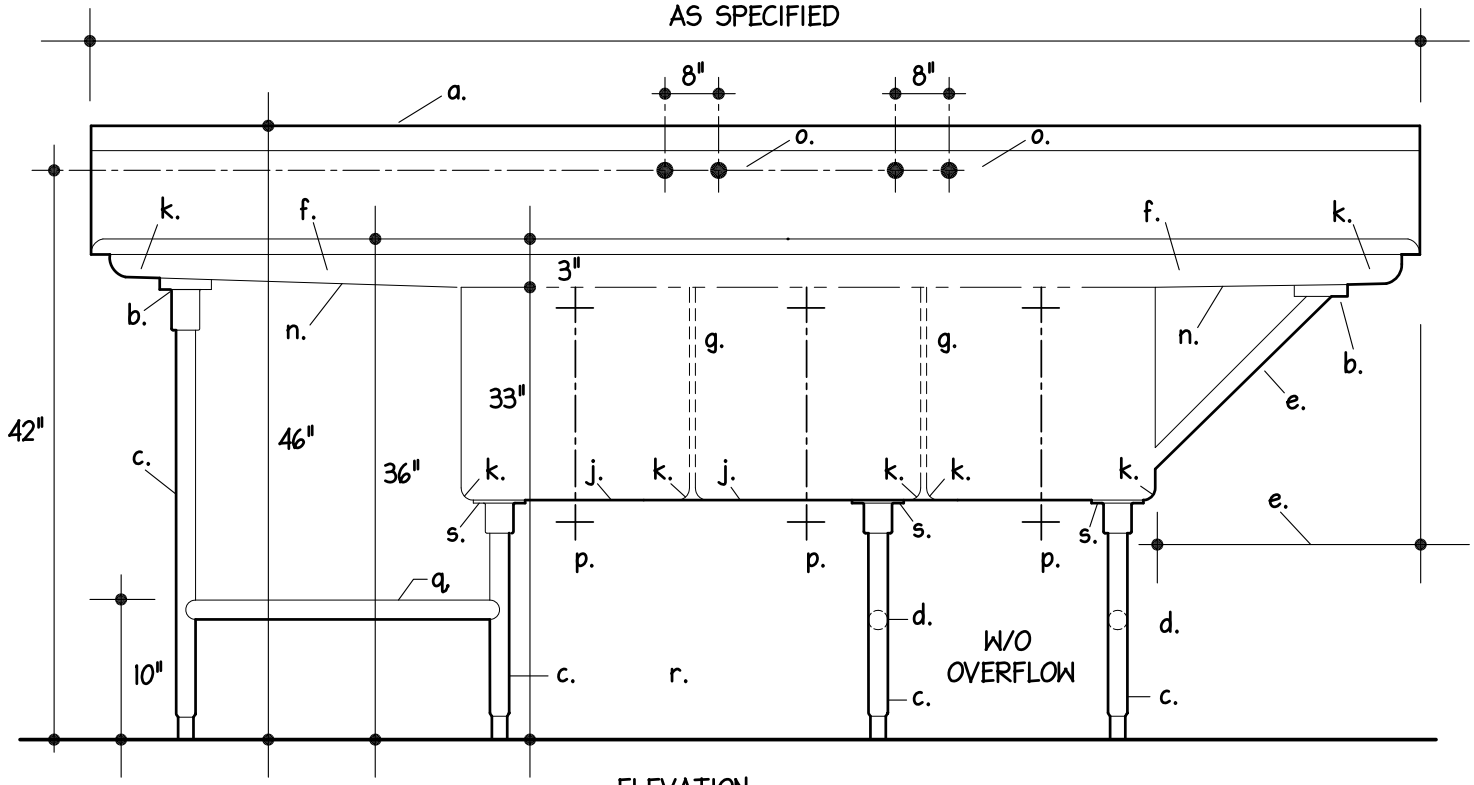

ELEVATION

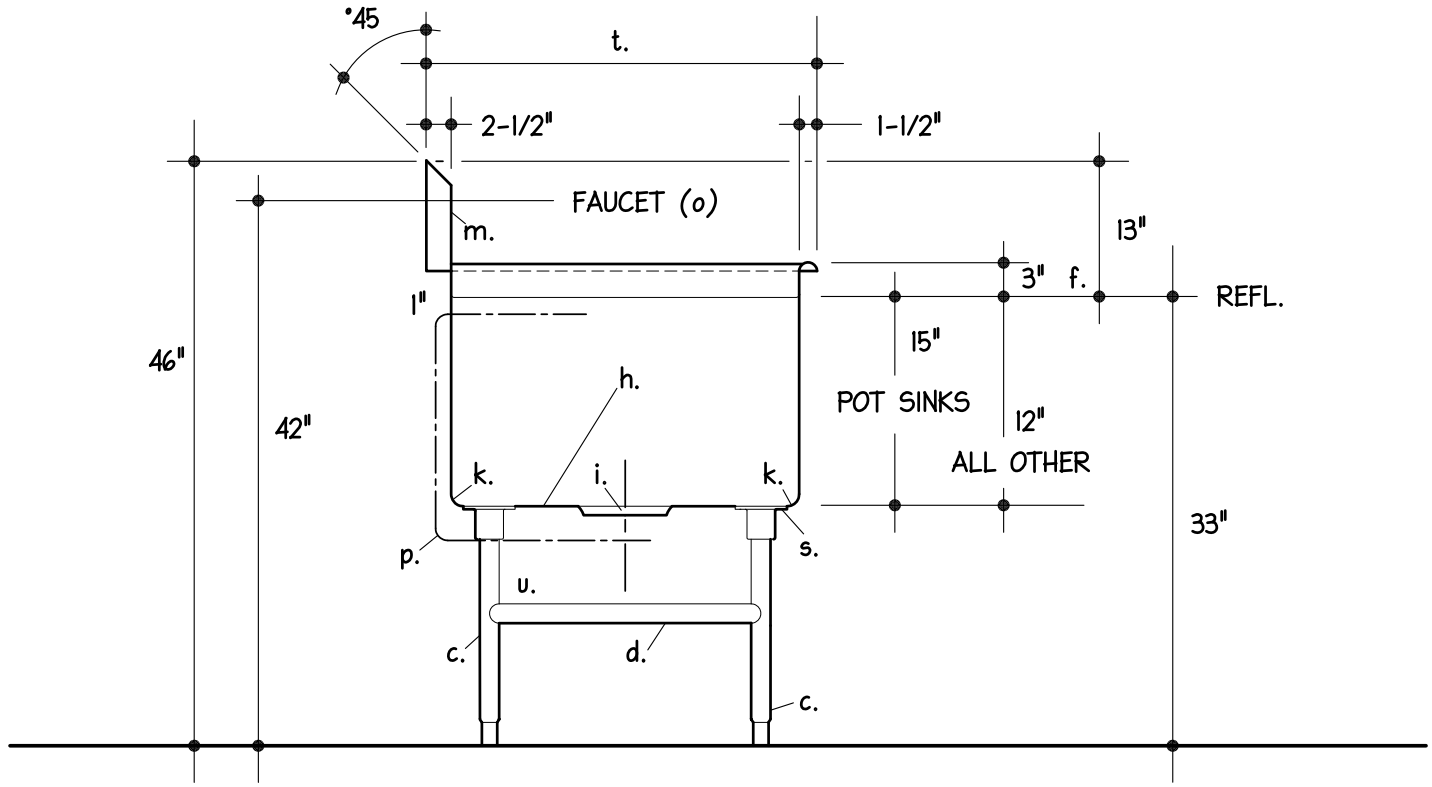

TYPICAL SECTION

a. MATERIAL - 14 GA. S/S.

b. STD. - 1.05c.

c. STD. - 1.07

d. STD. - 1.10

CONTINUED ON STD.- 3.01.1

e. DRAINBOARDS UP TO 24" IN LENGTH REQUIRE NO LEGS OR BRACES. DRAINBOARDS 25" TO 30" REQUIRE 1" O.D. 16 GA. S/S BRACE. DRAINBOARDS OVER 30" REQUIRE LEGS AND CHANNEL FRAMEWORK.

f. DRAINBOARDS SHALL PITCH TO SINK 1/8" PER FOOT OF LENGTH TO PROVIDE COMPLETE DRAINING WITHOUT POOLING. THE 3" HIGH RAISED ROLLED RIM AT THE SINK SHALL DECREASE IN HEIGHT TOWARD THE OUTER ENDS OF THE DRAINBOARD.

g. PARTITIONS BETWEEN COMPARTMENTS TO BE DOUBLE WALLED CONSTRUCTION WITH ROUNDED TOP, ALL WELDED INTEGRAL WITH SINK BODY.

h. BACK, BOTTOM, AND FRONT SHALL BE ONE CONTINUOUS PIECE WITH ENDS WELDED INTEGRAL, WITHOUT OVERLAPPING JOINTS OR OPEN SPACES, BETWEEN COMPARTMENTS.

i. WASTES SHALL BE SEATED IN DIE STAMPED DEPRESSIONS WITHOUT USE OF SOLDER, RIVETS OR WELDING. INSTALLED COMPONENTS SHALL BE FLUSH WITH SURROUNDING SURFACE.

j. EACH SINK COMPARTMENT TO BE PITCHED AND CREASED TO WASTE TO ASSURE COMPLETE DRAINING WITHOUT POOLING.

k. ENTIRE UNIT SHALL BE ALL WELDED COVE CORNERED CONSTRUCTION WITH VERTICAL AND HORIZONTAL AND INTERIOR CORNERS HAVING A 3/4" RADIUS.

l. STD.- 1.02 b EDGE.

m. STD. - 1.04a. BACKSPLASH.

n. UNDERSIDE OF DRAINBOARDS AND SINKS TO BE SPRAYED WITH SOUND DAMPENING IN COMPLIANCE WITH N.S.F. STD. 2 PARA 4.441 WHEN SPECIFIED.

o. FAUCETS - T¢S MODEL B-232 WITH AERATOR B-199, REMOVABLE MONEL SEATS AND 1/2" I.P.S. MALE INLETS.

p. WASTES - 2" NICKEL PLATED BRONZE ROTARY HANDLE WASTE S/S STRAINER PLATE WITH CHROME WITH CHROME PLATED BRASS CONNECTED OVERFLOW, STANDARD- KIEL HARDWARE MFG. CO. #1770-1015-1000.

q, REAR CROSS BRACING ONLY.

r. OMIT FRONT AND REAR LENGTHWISE CROSSBRACIG UNDER SINKS.

s. 12 GAUGE STAINLESS STEEL 6"x 6" TRIANGULAR SUPPORT PLATE WELDED TO UNDERSIDE OF SINKS.

t. WIDTH AS SPECIFIED.

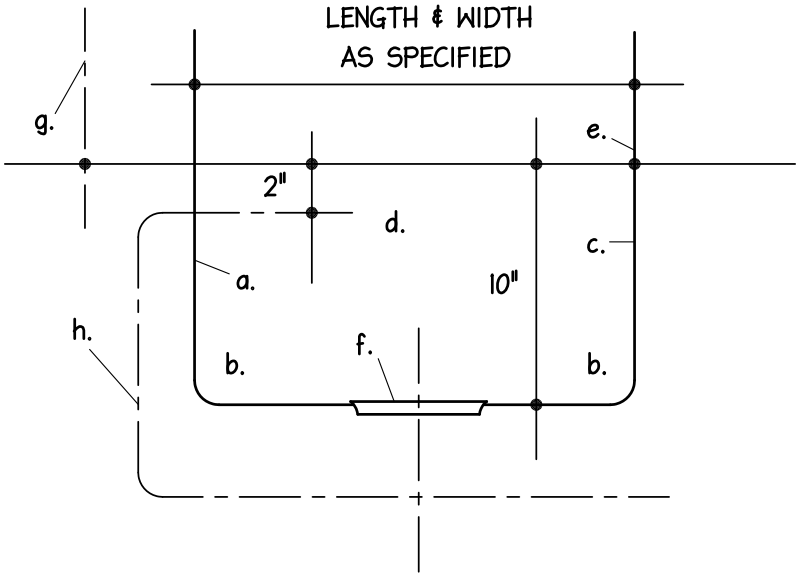

TYPICAL SECTION

a. MATERIAL - 14 GA. S/S

b. ENTIRE UNIT SHALL BE ALL WELDED COVE CORNERED CONSTRUCTION WITH VERTICAL AND HORIZONTAL AND INTERIOR CORNERS HAVING A 3/4" RADIUS.

c. TWO SIDES AND BOTTOM SHELL BE ONE CONTINUOUS PIECE WITH ENDS WELDED INTEGRAL WITHOUT OVERLAPPING JOINTS.

d. PARTITIONS BETWEEN COMPARTMENTS TO BE DOUBLE WALLED CONSTRUCTION WITH ROUNDED TOP, ALL WELDED INTEGRAL WITH SINK.

e. FULLY WELD SINK TO TOP WITHOUT OVERLAPPING JOINTS.

f. WASTES SHALL BE SEATED IN DIE STAMPED DEPRESSIONS WITHOUT USE OF SOLDER RIVETS OR WELDING . INSTALLED COMPONENTS SHALL BE FLUSH WITH SURROUNDING SURFACE.

g. FAUCET - T¢S MODEL B-222 FAUCET WITH B-199 AERATOR, REMOVABLE MONEL SEATS AND 1/2" IPS MALE INLETS.

h. WASTES - 1-1/2" NICKEL PLATED BRONZE ROTARY HANDLE WASTE AND S/S STRAINER PLATE WITH CHROME PLATED BRASS CONNECTED OVERFLOW, STANDARD-KEIL HARDWARE COMPANY NO. #1770-1015-1000.

(END OF SECTION 114000)

SECTION 115213

PROJECTION SCREENS

PART 1 - GENERAL

1.1 RELATED DOCUMENTS

A. Drawings and general provisions of the Contract, including General and Supplementary Conditions and Division 01 Specification Sections, apply to this Section.

1.2 SUMMARY

A. Section Includes:

1. Electrically operated, front-projection screens and controls.

1.3 DEFINITIONS

A. Gain of Front-Projection Screens: Ratio of light reflected from screen material to that reflected perpendicularly from a magnesium carbonate surface as determined per SMPTE RP 94.

1.4 ACTION SUBMITTALS

A. Product Data: For each type of product.

B. Shop Drawings: Show layouts and types of front-projection screens. Include the following:

1. Drop lengths.
2. Location of seams in viewing surfaces.
3. Location of screen centerline relative to ends of screen case.
4. Anchorage details, including connection to supporting structure for suspended units.
5. Details of juncture of exposed surfaces with adjacent finishes.
6. Location of wiring connections for electrically operated units.
7. Wiring diagrams for electrically operated units.
8. Accessories.

1.5 CLOSEOUT SUBMITTALS

A. Maintenance Data: For projection screens to include in maintenance manuals.

1.6 DELIVERY, STORAGE, AND HANDLING

A. Environmental Limitations: Do not deliver or install front-projection screens until spaces are enclosed and weathertight, wet work in spaces is complete and dry, and temporary HVAC system is operating and maintaining ambient temperature and humidity conditions at occupancy levels during the remainder of the construction period.

1.7 COORDINATION

A. Coordinate layout and installation of projection screens with adjacent construction, including ceiling framing, light fixtures, HVAC equipment, fire-suppression system, and partitions.

PART 2 - PRODUCTS

2.1 ELECTRICALLY OPERATED, FRONT-PROJECTION SCREENS

A. General: Manufacturer's standard units consisting of case, screen, motor, controls, mounting accessories, and other components necessary for a complete installation. Provide units that are listed and labeled as an assembly by UL or another testing and inspecting agency acceptable to authorities having jurisdiction.

1. Electrical Components, Devices, and Accessories: Listed and labeled as defined in NFPA 70, by a qualified testing agency, and marked for intended location and application.
2. Line Voltage Control: Remote, key-operated, 3-position control switch installed in recessed metal device box with flush cover plate.
3. End-Mounted Motor: Instant-reversing, gear-drive motor of size and capacity recommended by screen manufacturer; with permanently lubricated ball bearings, automatic thermal-overload protection, preset limit switches to automatically stop screen in up and down positions, and positive-stop action to prevent coasting. Locate motor in its own compartment.
4. Tab Tensioning: Units have stainless-steel tensioning cables on both sides of screen connected to edges of screen by tabs to pull screen flat horizontally.

B. Suspended, Electrically Operated Screens with Automatic Ceiling Closure, with Motor-in Roller, and with Tab Tensioning: Units designed and fabricated for suspended mounting; with bottom of case composed of two panels, fully enclosing screen, motor, and wiring; one panel hinged and designed to open and close automatically when screen is lowered and fully raised, the other removable or openable for access to interior of case.

1. Basis of Design Product: Subject to compliance with requirements, provide product by Da-Lite Screen Company, or comparable product by one of the following:

   a. Draper Inc.
   b. Stewart Filmscreen Corporation.

2. Provide metal or metal-lined motor enclosure on units with end-mounted motor.
3. Screen Case: Made from metal, wood, wood products, and fire-retardant materials.
4. Provide screen case constructed to be installed with underside flush with ceiling.
5. Prime paint surfaces of screen case that will be exposed to view in the finished work.
6. Screen Mounting: Bulkhead recessed. Include mounting hardware.

2.2 FRONT-PROJECTION SCREEN MATERIAL

A. Matte-White Viewing Surface: Peak gain of 0.9 to 1.0, and gain of not less than 0.8 at an angle of 50 degrees from the axis of the screen surface.

1. Available Products:

a. Da-Lite Screen Co., Inc.; Matte White.
b. Draper Inc. Fiberglass Matte White.

B. Material: Vinyl-coated, glass-fiber fabric; black backed.

C. Mildew-Resistance Rating: Zero or 1 when tested according to ASTM G 21.

D. Flame Resistance: Passes NFPA 701.

E. Seamless Construction: Provide screens, in sizes indicated, without seams.

F. Edge Treatment: Black masking borders.

G. Size of Viewing Surface: 123 by 164 inches; 210 inches diagonal

H. Provide 12 inches extra drop length at top of screen.

1. Color: Black.

PART 3 - EXECUTION

3.1 INSTALLATION

A. Install front-projection screens at locations indicated to comply with screen manufacturer's written instructions.

B. Install front-projection screens with screen cases in position and in relation to adjoining construction indicated. Securely anchor to supporting substrate in a manner that produces a smoothly operating screen with vertical edges plumb and viewing surface flat when screen is lowered.

1. Install low-voltage controls according to NFPA 70 and manufacturer's written instructions.

a. Wiring Method: Install wiring in raceway except in accessible ceiling spaces and in gypsum board partitions where unenclosed wiring method may be used. Use UL-listed plenum cable in environmental air spaces, including plenum ceilings. Conceal raceway and cables except in unfinished spaces.

2. Test electrically operated units to verify that screen controls, limit switches, closure, and other operating components are in optimum functioning condition.

END OF SECTION

SECTION 116143

STAGE CURTAINS

PART 1 - GENERAL

1.1 RELATED DOCUMENTS

A. Drawings and general provisions of the Contract, including General and Supplementary Conditions and Division 01 Specification Sections, apply to this Section.

1.2 SUMMARY

A. Section Includes:

1. Stage curtains, scrims, and drops.
2. Draw-curtain tracks.
3. Curtain rigging.

1.3 PREINSTALLATION MEETINGS

A. Preinstallation Conference: Conduct conference at Project site.

1.4 ACTION SUBMITTALS

A. Product Data: For each type of product and the following:

1. Draw-Curtain Machines: Include rated capacities, operating characteristics, and electrical characteristics.
2. Tracks: Capability of each track to support the weight and operation of curtains that it supports.

B. Shop Drawings: For each installation and for special components not dimensioned or detailed in manufacturer's product data.

1. Include plans, elevations, sections, and attachment details of curtains.
2. Include fabric assembly and hanging details.
3. Dimension operating clearances.
4. Include documentation of capacity of each batten, track, attachment, and rigging component to support loads.
5. Locations of equipment components, switches, and controls. Differentiate between manufacturer-installed and field-installed wiring.
6. Wiring Diagrams: For power, signal, and control wiring.

C. Samples for Initial Selection: For each type of stage curtain indicated. Include color charts showing full range of colors, textures, and patterns available, together with 12-inch-square Sample of each fabric type and seam.

1.5 INFORMATIONAL SUBMITTALS

A. Coordination Drawings: Reflected ceiling plans and other details, drawn to scale, on which the following items are shown and coordinated with each other, using input from installers of the items involved:

1. Structural members to which tracks, battens, and other stage-curtain equipment will be attached.
2. Locations of lighting fixtures and cabling, ductwork, piping, and sprinklers.
3. Rigging equipment for stage equipment.
4. Access panels.

B. Qualification Data: For Installer.

C. Product Certificates: For the following, from manufacturer:

1. Fabric: Provide name of flame-retardant chemical used, identification of applicator, treatment method, application date, allowable life span for treatment, and details of any restrictions and limitations.
2. Rigging: Compliance of suspended battens and tracks with requirements.

D. Sample Warranty: For manufacturer's special warranty.

1.6 CLOSEOUT SUBMITTALS

A. Operation and Maintenance Data: For stage curtains and rigging to include in operation and maintenance manuals.

1.7 QUALITY ASSURANCE

A. Installer Qualifications: Manufacturer of stage curtains.

1.8 FIELD CONDITIONS

A. Environmental Limitations: Do not install stage curtains until spaces are enclosed and weathertight, wet work in spaces is complete and dry, work at and above ceilings is complete, and ambient temperature and humidity conditions are maintained at the levels indicated for Project when occupied for its intended use.

B. Field Measurements: Verify locations of supporting structural elements and construction contiguous with stage curtains and rigging by field measurements before fabrication and indicate measurements on Shop Drawings.

1.9 WARRANTY

A. Manufacturer's Special Warranty: Manufacturer agrees to repair or replace components of stage-curtain systems that fail in materials or workmanship within specified warranty period.

1. Failures include, but are not limited to, faulty operation of rigging.
2. Warranty Period: Two years from date of Substantial Completion.

PART 2 - PRODUCTS

2.1 STAGE-CURTAIN SYSTEMS

A. Description: Complete stage-curtain systems, including stage curtains, tracks, draw-curtain machines, and rigging; with necessary accessories for support and operation.

1. Manufacturers: Subject to compliance with requirements, available manufacturers offering products that may be incorporated into the Work include, but are not limited to the following:

a. Janson Industries; (800) 548-8982.
b. J. R. Clancy Company; (800) 836-1885.
c. Pittsburgh Stage, Inc; (412) 534-4500.
d. Melfabco, Inc; (866) 635-3222.
e. Frankel Associates; (800) 221-4670.
f. Valley Forge Fabrics, Inc; (954) 971-1776.
g. Automatic Device Company; (800) 360-2321.
h. H & H Specialties Inc; (800) 221-9995.

B. Source Limitations: Obtain stage-curtain systems from single manufacturer. Obtain each color, grade, finish, type, and variety of fabric from single source with resources to provide materials of consistent quality in appearance and physical properties.

2.2 PERFORMANCE REQUIREMENTS

A. Fire-Test-Response Characteristics: Provide stage curtains meeting the following requirements as determined by testing identical products by UL or another testing and inspecting agency acceptable to authorities having jurisdiction.

1. Flame-Propagation Resistance: Passes NFPA 701.

a. Permanently attach label to each fabric of curtain assembly indicating whether fabric is inherently and permanently flame resistant or is treated with flame-retardant chemicals and whether it requires retreatment after cleaning or after a designated time period of use.
b. Permanently attach 12-inch-square swatch of same fabric and dye lot for each fabric of a curtain assembly to the back of assembly for use as fire-resistance test strip.

B. Electrical Components, Devices, and Accessories: Listed and labeled as defined in NFPA 70, by a qualified testing agency, and marked for intended location and application.

2.3 CURTAIN FABRICS

A. General: Provide fabrics inherently and permanently flame resistant or chemically flame resistant by immersion treatment according to performance requirements indicated. Provide fabrics of each type and color from same dye lot.

B. Synthetic Boucle: Rough-textured woven fabric of synthetic boucle yarn; blend of modacrylic fibers, monofilament, rayon, and other synthetic fibers; permanently and inherently flameresistant; 48" minimum width, and other characteristics as follows:

1. Heavy Weight: Fabric weighing not less than 14 oz per linear yard.
2. Products: Subject to compliance with requirements, provide one of the following heavy weight boucle fabrics:

    a. “Bolero Boucle #202"; Frankel Associates.
    b. “Vegas”; Melfabco.
    c. “Reno”; Valley Forge Fabrics

C. Front Curtain Color: Refer to Section 090600.

D. Front Curtain Lining: Gramercy Verel of same fiber type as face fabric.

E. Cyclorama Curtain: Plain-woven heavy weight fabric of 100 percent cotton with raised, rounded chevron ribs running from selvage to selvage; 48-inch minimum width, 12 oz or more per lineal yard.

1. Products: Subject to compliance with requirements, provide one of the following cotton repp fabrics:

    a. “Nassau Chevron”; Frankel Associates.
    b. “Atlas Oxford”; Melfabco.
    c. “Atlas Oxford”; Valley Forge Fabrics LINING

2.4 CURTAIN FABRICATION

A. General: Provide not less than 50 percent additional fullness for curtains, unless otherwise indicated. Horizontal seams and fabric less than half-width are not permitted.

1. Vertical Hems: Provide vertical hems not less than 3 inches wide, double-stitched and machine-sewn with no selvage material visible from front of curtain.
2. Turnbacks: Provide turnbacks, formed by folding 24 inches of face fabric back at each end of panels and securing by sewing across top hem and grommeting through both layers of fabric. Do not sew turnbacks vertically.
3. Top Hems: Reinforce top hems by double-stitching 3-1/2 inches wide heavy jute webbing to top edge with minimum 1 inch of face fabric turned under.
4. Pleats: Provide fullness in curtains with round pleats formed by grommeting. Provide not less than #2 brass grommets along top hem reinforcing, spaced so that 6 inches of material can be gathered into pleat every 12 inches, by means of Gerwin #42 “S” hooks. Sewn-in pleats may be provided.

    a. Arrange vertical seams of valances and borders so that they fall within pleats.

5. Bottom Hems: Except for curtains which hang to floor, provide bottom hems not less than 6 inches deep. For floor-length curtains, provide 6-inch hems with separate interior heavy canvas chain pockets equipped with No. 8 cadmium-plated jack chain. Stitch chain pocket so chain rides 2 inches above bottom edge of curtain.
6. Lining: Provide lining for each curtain in same fullness as face fabric, and finished 2 inches shorter than face fabric. Unless otherwise specified, provide lining constructed of same fiber type as face fabric. Attach lining to face fabric along bottom line at seams with 4 inches long strips of heavy woven cotton tape.

B. Front Setting:

1. Valance: Fabricate valance of heavy weight Synthetic Boucle.

2. Front Curtain: Fabricate front curtain of heavy weight Synthetic Boucle with 24-inch turnbacks at each end of both panels.

C. Borders and Legs: Fabricate border and leg curtains of cotton repp.

D. Rear Curtain: Fabricate rear curtain of cotton repp.

2.5 CURTAIN TRACK

A. Straight Curtain Tracks:

1. Steel Tracks, General: Fabricate of not less than 0.075-inch (14 gauge) nominal thickness galvanized roll-formed steel, with continuous bottom slot, and with each half of track in one continuous piece.
2. Medium Duty Track: Equip track with adjustable pulley blocks containing sleeve-bearing wheels adequately guarded. Provide curtain carrier of plated or rust-proof steel with pair of polyethylene wheels fastened parallel to body by rust-proof steel rivet. Equip carriers with swivel eye for attachment of curtain snap or “S” hook. Provide end stops for track and adjustable floor block for maintaining proper tension on 1/4-inch stretch-resistant operating line of braided polypropylene or fiberglass center cord. Equip carriers with back pack guide accessory to permit offstage curtain folding.
3. Products: Subject to compliance with requirements, provide one of the following:

   a. Atlas Silk Model No. 101; H&H Specialties.
   b. Besteel Model No. 170; Automatic Devices.
   c. Model No. 731; J.R. Clancy.
   d. Model No. 330 RP; Janson Industries

B. Curved Curtain Tracks:

1. Aluminum Tracks, General: Fabricate of not less than nominal thickness (14 gage) extruded aluminum, with each half of track in one continuous piece. Provide curtain carriers for track spaced at 12-inch o.c.
2. Fabricate curved curtain tracks for walk-along operation without cord or pulleys, designed for rigid attachment to ceiling or hanging clamps. Fabricate track of nominal thickness 11-gage extruded aluminum in I-beam configuration, with intermediate flange. Provide carriers spaced at 12-inch o.c. and constructed of two nylon wheels fastened parallel to zinc-plated steel body by steel rivet, with rubber or neoprene bumpers. Equip carriers with heavy-duty swivel eye for attachment of curtain snap or “S” hook.
3. Shop fabricate curved portions of track in accordance with approved shop drawings.
4. Products: Subject to compliance with requirements, provide one of the following:

   a. Atlas Silk Model No. 301; H&H Specialties.
   b. Rig-I-Flex Model No. 142; Automatic Devices.
   c. Model No. 142; J.R. Clancy.
   d. Model No. 380C; Janson Industries

2.6 MISCELLANEOUS

A. Provide all necessary pipe battens, rigging, supports, winches, counterweights and other mechanisms for items identified on the Electrical Drawings for lighting. Coordinate with the Electrical Contractor.

2.7 CURTAIN RIGGING

A. Battens: Fabricated from steel pipe with a minimum number of joints. Connect pipe at joints with a drive-fit pipe sleeve not less than 18 inches long, and secure with four flush rivets, plug welds, threaded couplings, or another equally strong method.

1. Steel Pipe: ASTM A 53/A 53M, Grade A, standard weight (Schedule 40), black, NPS 1-1/2 nominal diameter unless otherwise indicated.
2. Finish: Shop painted black, with a 1-inch-wide yellow stripe at center of each batten.

B. Galvanized Steel Sheet: Zinc-coated carbon steel sheet of commercial quality, complying with ASTM A526, G60 zinc, coating; 0.075 inch (14 gage) minimum nominal thickness.

C. Aluminum: Alloy and temper recommended by manufacturer for strength and corrosion resistance, mill finish, ASTM B221 for extrusions

D. Supports, Clamps, and Anchors: ASTM A 153/A 153M, Class B, galvanized sheet steel in manufacturer's standard thicknesses, galvanized after fabrication.

E. Trim and Support Chain: ASTM A 391/A 391M, Grade 80, hardened alloy steel chain rated for overhead lifting.

F. Inserts, Bolts, Rivets, and Fasteners: Manufacturer's standard corrosion-resistant units.

PART 3 - EXECUTION

3.1 EXAMINATION

A. Examine areas and conditions, with Installer present, for compliance with requirements for supporting members, blocking, installation tolerances, clearances, and other conditions affecting performance of stage-curtain work.

B. Examine inserts, clips, blocking, or other supports required to be installed by others to support tracks and battens.

C. Proceed with installation only after unsatisfactory conditions have been corrected.

3.2 INSTALLATION, GENERAL

A. Install stage-curtain system according to curtain and track manufacturer's written instructions.

B. Use anchoring devices to suit conditions and substrate materials encountered.

C. Set items plumb and square, securely anchored to building structure.

D. Insulate to prevent electrolysis between dissimilar metals.

E. Field-weld joints in steel work, without open seams. Grind smooth and polish to match adjacent surfaces.

F. Field touch-up blemishes to original finish.

3.3 BATTEN INSTALLATION

A. Install battens by suspending at heights indicated with trim and supports spaced to support load, except do not exceed 10 feet between supports.

B. Secure chains either directly to structures or to inserts, eye screws, or other devices which are secure and appropriate to substrate, and which will not deteriorate or fail with age or elevated temperatures.

C. Close ends of pipe batten units by welding and grinding smooth

3.4 TRACK INSTALLATION

A. Ceiling-Mounted Track: Drill track at intervals not greater than manufacturer's written instructions for spacing, and fasten directly to structure.

B. Wall-Mounted Track: Install track by suspending from brackets securely mounted to wall construction at track-support spacing, according to manufacturer's written instructions.

C. Batten-Hung Track: Install track by suspending from pipe batten with manufacturer's track clamp hangers attached to batten pipe clamps at track-support spacing, according to manufacturer's written instructions.

D. Track-Support Spacing: According to manufacturer's recommendations for applied loads, but not exceeding the following dimensions between supports:

1. Heavy-Duty Track: Do not exceed 7 feet between supports.
2. Medium-Duty Track: Do not exceed 6 feet between supports.
3. Curved Walk-Along Track: Do not exceed 4 feet between supports, and provide additional supports at curves and splices.

E. Install track for center-parting curtains with not less than 24-inch overlap of track sections at center, supported by track lap clamps.

3.5 CURTAIN INSTALLATION

A. Track Hung: Secure curtains to track carriers with track manufacturer’s special heavy-duty S-hooks or snap hooks.

B. Batten Hung: Secure curtains to pipe battens with minimum 1/8-inch-wide by 24 inches long braided soft cotton tie lines.

C. Adjust hardware, fixtures, and other moving or operating parts to function smoothly. The completed Work shall be leveled, tested and left ready for use.

3.6 PROTECTION OF FINISHED WORK

A. Do not permit finished work to be exposed to continued construction activity.

3.7 CURTAIN SCHEDULE

A. The Stage Equipment included in this Section of the Specifications shall consist of items specified and/or indicated the Drawings. The Stage Equipment items shall be supported from system of parallel pipe battens, and stage curtain tracks. Hardware shall be fastened to pipe battens by means of pipe clamps or trim chains.

B. Size given are track size, provide fullness and turnbacks as indicated.

1. Front Valance: 30'-0" wide x 2'-0" drop.

    a. Tie valance to pipe batten.

2. Front Curtain and #170 Bi-parting Track: Each half, 17'-0" wide and 14'-0" high.
3. Back Curtain and #170 Bi-Parting Track: Each half 17’0” wide and 13’0” high.
4. Side Curtains: Each 15'-0" wide x 13'-0" high.

END OF SECTION

SECTION 116623

GYMNASIUM EQUIPMENT

PART 1 - GENERAL

1.1 RELATED DOCUMENTS

A. Drawings and general provisions of the Contract, including General and Supplementary Conditions and Division 01 Specification Sections, apply to this Section.

1.2 SUMMARY

A. Section Includes:

1. Adjustable chin-up bar.
2. Safety pads.

1.3 PREINSTALLATION MEETINGS

A. Preinstallation Conference: Conduct conference at Project site.

1.4 ACTION SUBMITTALS

A. Product Data: For each type of product.

1. Include assembly, disassembly, and storage instructions for removable equipment.

B. Shop Drawings: For gymnasium equipment.

1. Include plans, elevations, sections, and attachment details.
2. Include details of field assembly for removable equipment, connections, installation, mountings, floor inserts, and operational clearances.
3. Include transport and storage accessories for removable equipment.
4. Include diagrams for power, signal, and control wiring.

C. Samples for Verification: For the following products:

1. Pad Fabric: Wall padding minimum 3 inches square, with specified treatments applied. Mark face of material.

1.5 INFORMATIONAL SUBMITTALS

A. Qualification Data: For Installer.

B. Product Certificates: For each type of gymnasium equipment.

C. Sample Warranty: For special warranty.

1.6 CLOSEOUT SUBMITTALS

A. Operation and Maintenance Data: For gymnasium equipment to include in operation and maintenance manuals.

1.7 QUALITY ASSURANCE

A. Installer Qualifications: An entity that employs installers and supervisors who are trained and approved by manufacturer.

1.8 FIELD CONDITIONS

A. Field Measurements: Verify position and elevation of floor inserts and layout for gymnasium equipment.

1.9 WARRANTY

A. Special Warranty: Manufacturer agrees to repair or replace components of gymnasium equipment that fail in materials or workmanship within specified warranty period.

1. Warranty Period: Five years from date of Substantial Completion.

PART 2 - PRODUCTS

2.1 ADJUSTABLE CHIN-UP BAR

A. Basis-of-Design Manufacturer: Subject to compliance with requirements, provide Performance Sports Systems; #109, or comparable product by one of the following:

1. AALCO Manufacturing.
2. Jaypro Sports, LLC.
3. Porter Athletic Equipment Company.

2.2 SAFETY PADS

A. Basis-of-Design Manufacturer: Subject to compliance with requirements, provide Performance Sports Systems; 4100 series wall padding, or comparable product by one of the following:

1. AALCO Manufacturing.
2. Jaypro Sports, LLC.
3. Porter Athletic Equipment Company.

B. Surface-Burning Characteristics: Comply with ASTM E 84; testing by a qualified testing agency. Identify products with appropriate markings of applicable testing agency.

1. Flame-Spread Index: 25 or less.
2. Smoke-Developed Index: 50 or less.

C. Pad Coverings: Provide safety pad fabric covering that is fabricated from puncture- and tear-resistant, PVC-coated polyester or nylon-reinforced PVC fabric, minimum 14-oz./sq. yd. and treated with fungicide for mildew resistance; with surface-burning characteristics indicated.

D. Wall Safety Pads: Padded wall wainscot panels designed to be attached in a continuous row; each panel section consisting of fill laminated to backer board, with visible surfaces fully covered by seamless fabric covering, free of sag and wrinkles and firmly attached to back of backer board.

1. Backer Board: Minimum 7/16-inch-thick OSB exterior grade wood panels with Z-clip attachment method.
2. Fill: Multiple-impact-resistant foam, minimum 1-1/2-inch-thick polyurethane, 3.5-lb/cu. ft. density.
3. Size: 2 ft. wide by 6 ft high.
4. Installation Method: Concealed mounting Z-clips.
5. Fabric Covering Color: As selected by Architect from manufacturer's full range.

PART 3 - EXECUTION

3.1 EXAMINATION

A. Examine substrates, areas, and conditions, with Installer present, for compliance with requirements for court layout, alignment of mounting substrates, installation tolerances, operational clearances, and other conditions affecting performance of the Work.

1. Verify critical dimensions.
2. Examine supporting structure, subfloors, and footings below finished floor.
3. Examine wall assemblies, where reinforced to receive anchors and fasteners, to verify that locations of concealed reinforcements are clearly marked. Locate reinforcements and mark locations.

B. Proceed with installation only after unsatisfactory conditions have been corrected.

3.2 INSTALLATION

A. Comply with manufacturer's written installation instructions.

B. Install gymnasium equipment after other finishing operations, including painting, have been completed unless otherwise indicated.

C. Permanently Placed Gymnasium Equipment and Components: Install rigid, level, plumb, square, and true; anchored securely to supporting structure; positioned at locations and elevations indicated; in proper relationship to adjacent construction; and aligned with court layout.

D. Floor-Insert Setting: Clean oversized, recessed voids in concrete substrate of debris. Position each sleeve, and fill void around sleeve with grout, mixed and placed according to grout manufacturer's written instructions. Protect portion of sleeve above subfloor from splatter. Verify that sleeves are set plumb, aligned, and at correct height and spacing; hold in position during placement and finishing operations until grout is sufficiently cured. Set insert so top surface of completed unit is flush with finished flooring surface.

E. Cutout Trim: Limit cuts in face of padding so that cuts are securely and fully concealed behind trim-kit flange.

F. Anchoring to In-Place Construction: Use anchors and fasteners where necessary to secure built-in and permanently placed gymnasium equipment to structural support and to properly transfer load to in-place construction.

G. Removable Gymnasium-Equipment Components: Assemble in place to verify that equipment and components are complete and in proper working order. Disassemble removable gymnasium equipment after assembled configuration is approved by Owner, and store units in location indicated on Drawings.

3.3 ADJUSTING

A. Adjust movable components of gymnasium equipment to operate safely, smoothly, easily, and quietly; free from binding, warp, distortion, nonalignment, misplacement, disruption, or malfunction, throughout entire operational range; and lubricate as recommended in writing by manufacturer.

3.4 DEMONSTRATION

A. Train Owner's maintenance personnel to adjust, operate, and maintain gymnasium equipment.

END OF SECTION

SECTION 116800
PLAY FIELD EQUIPMENT AND STRUCTURES

PART 1 - GENERAL

1.1 SCOPE

A. Furnish labor, material and equipment necessary for the provision and installation of the playground equipment, structure or modular unit as shown on the drawings and specified herein.

B. Work shall include but not limited to the following: excavation, layout, and the provision and installation of playground equipment, structure or modular unit in accordance with the manufacturer's installation instructions, including all appurtenances and accessories as required for a full and complete installation.

1.2 SUBMITTALS

A. Product Data: The Contractor shall submit within 90 calendar days after receipt of Notice to Proceed, complete sets of the material and equipment submittals, including:

a. Play equipment manufacturer and manufacturer's representative's name(s) and address(es);
b. Plan view drawings with model numbers, descriptive labels (including component names,) deck heights, and notations of compliance with CPSC, ASTM F1487-01 and ADA;
c. Detailed component list with model numbers and catalog descriptions;
d. Color chart;
e. Written material specifications for all components;
f. IPEMA certification certificate from the IPEMA website;
g. Copy of manufacturer's warranty in certificate format;
h. Copy of manufacturer's ISO 9001 Certification.

B. Approval of the submittals shall be the Contractor's authorization to order the required material and equipment. There will be no deviation from the approved submittals without the written authorization of the Owner's representative

1.3 PRODUCTS

A. Products: The layout shown in the plan view is based upon equipment and measurements from Miracle Recreation Equipment Company. Other products may be considered equal if all of the parameters, specifications and design intent of the drawings are met. Acceptable manufacturers include Miracle Recreation Equipment Company, Landscape Structures, Inc., or approved equivalent. Liberty Parks & Playgrounds, Inc. can be contacted at (877) 376-7823 (Phone), (302) 659-5084 (Fax), or info@libertyparks.com (Email.)

B. Design and Fabrication: Playground equipment, structure or modular unit submitted for consideration shall be equivalent in design, layout, deck size, post size, clamping/fastening system, deck/slide/climber height, ADA accessibility, appearance, color and construction detail to playground equipment specified in the drawings. Reasonable variations in size/height (no more than +/- 10%) and manufacturer's standard colors may be allowed at

the Owner's discretion. Color schemes are to match as closely as possible to the originally specified colors. Play value and safety features of components must be equal or superior to specified design as judged by the Owner or Owner's representative.

C. Modification: Any expense of modification, adjustment or revision required to ensure compliance of furnished equipment to specified equipment and playground design shall be the sole expense and responsibility of the Contractor.

1.4 PLAYGOUND SAFETY STANDARDS AND QUALITY ASSURANCE

A. All products shall bear the certification seal of the International Play Equipment Manufacturers Association (IPEMA). All designs shall meet or exceed the Americans with Disabilities Act (ADA) "Final Accessibility Guidelines for Play Areas" regulations as published on October 18, 2000. All manufacturers must be ISO 9001 certified.

1.5 REFERENCES AND STANDARDS

A. ASTM: American Society for Testing and Materials
B. CPSC: Consumer Product Safety Commission
C. IPEMA: International Playground Equipment Manufacturers Association
D. ADA: Americans with Disabilities Act
E. ISO: International Organization for Standardization
F. CPSI: Certified Playground Safety Inspector

1.6 WARRANTY/GUARANTEE

A. The equipment manufacturer shall warrant material and workmanship against defects, from the date of manufacturer's invoice, for the period of time as follows:
   1. LIMITED ONE HUNDRED (100) YEAR WARRANTY against structural failure due to weather corrosion or defects in materials and workmanship on aluminum deck posts, steel deck posts, clamping/fastening (Versalok®), and associated fastening hardware.
   2. LIMITED FIFTEEN (15) YEAR WARRANTY against structural failure due to weather corrosion or defects in materials and workmanship on steel support legs and Mira-Therm™ II components on MEGA TOWER®, TOTS' CHOICE®, KIDS' CHOICE®, CENTER STAGE®, Nexus® and Boulder Ridge® Rock Wall; on playsystem steel components including railings, rungs, and rigid climbers, and Rockite®.
   3. LIMITED ONE (1) YEAR WARRANTY against structural failure caused by defective materials or defective workmanship on TODDLERS' CHOICE® main support materials and decks.
   4. LIMITED ONE (1) YEAR WARRANTY structural failure caused by defective materials or defective workmanship on Slashproof Seats and 360 degree Bucket Tot Seats for Swings.
   5. LIMITED ONE (1) YEAR WARRANTY against structural failure due to defects in materials and workmanship for all products and components that are not specifically listed above, including, without limitation, all moving parts such as swing hangers, swivels, chains, whirls, trolleys and flexible climbers.
   6. Repaired or replacement part(s) are only warranted for the balance of the original limited warranty.
   7. These limited warranties do not include fading of colors, damage due to excessive wear and tear, vandalism, or negligence. These warranties are valid only if products are installed according to manufacturer's installation instructions.

PART 2 - MATERIALS

1.1 EQUIPMENT

A. See drawings for type, style, configuration, size and height of playground equipment, structure or modular unit to be provided.
B. See drawings for the color schedules of the various elements of playground equipment, structure or modular unit to be provided.

1.2 SPECIFICATIONS / COMPONENTS

A. Designs and specifications are based upon equipment from Miracle Recreation Equipment Company. Equivalents will be considered against this standard of quality and design and will be determined at the Owner's discretion.

B. Component list:

Qty	Model No.	Description
1	7147352	5" OD SINGLE POST SWG FRAME ONLY 2 SEATS REQ
2	7147352X	BAY EXTENSION FOR 5" OD SGL POST SWG FRAME
1	7147351HX	5" OD ADD-A-BAY 8' TR (1) THERA SEAT REQ MC
6	2840	SWG PART SLASH PROOF SEAT W/CHAIN (8' TR)
1	2740	SWG PART THERAPEUTIC SWG SEAT W/CHAIN (8' TR)
1	304	TEN SPIN
1	4561	TARANTULA CLIMBER
1	9451	SADDLE SEAT, ANGLED POST
1	9451	SADDLE SEAT, ANGLED POST
1	9451	SADDLE SEAT, ANGLED POST
1	71453459	CST 5' SQUARE DECK FOR ROOF
1	71497049	4' ARCH BRIDGE BETWEEN DECKS
2	714816W	FULL WAVE BARRIER, TUBE
1	71474959U	6'2" TYP SLIDE 405 DEG DOMED WAVE (5' DECK)
1	71485159	SQUARE TRANSFER POINT W/CLOSED HR (5' DECK)
1	7147285	BUMP & GLIDE SLIDE, ONE PIECE (5' DECK)
1	71452459	CST 5' SQUARE DECK
1	7149939	ADA STAIRS BTWN DECKS W/1'6" RISE
1	7145039	1/2 HEX FULL DECK (ATTACHES TO 4 POSTS)
4	714553	5" OD X 160" POST (5'6" TO 6'6" DECKS)
1	7147196	CLIFF CLIMBER (6'6" DECK)
1	714670M31	CHAM II TPRL SLIDE ENTRY/EXIT (5'-6'6" DK)
1	7146705	CHAMELEON II RIGHT SECTION
2	7146704	CHAMELEON II SHORT STRAIGHT SECTION
1	7146704	CHAMELEON II SHORT STRAIGHT SECTION
1	7146704	CHAMELEON II SHORT STRAIGHT SECTION
1	7146707	CHAMELEON II LONG STRAIGHT SECTION
1	7146707	CHAMELEON II LONG STRAIGHT SECTION
1	7146707	CHAMELEON II LONG STRAIGHT SECTION
1	7146706	CHAMELEON II LEFT SECTION
1	7146085	WAVY WEDGE WALL WALKER (5' DECK)
1	7145029	SQUARE DECK (ATTACHES TO 4 POSTS)

1	71485159	SQUARE TRANSFER POINT W/CLOSED HR (5' DECK)
1	71497049	4' ARCH BRIDGE BETWEEN DECKS
2	7145129	PENTAGON DECK (ATTACHES TO 5 POSTS)
1	7146835	HURRICANE CLIMBER (5' DECK)
1	7146701	CHAMELEON II ENTRY & EXIT (5' - 6'6" DECK)
1	7146704	CHAMELEON II SHORT STRAIGHT SECTION
1	7146705	CHAMELEON II RIGHT SECTION
1	714808	CLIMBING POLE (3', 5' OR 6'6" DECK)
1	7149939	ADA STAIRS BTWN DECKS W/1'6" RISE
1	7148161	WIRE MESH ENCLOSURE
1	7147396	30" ID STRAIGHT TUBE SLIDE (6'6"' DECK)
1	7146786	BACKTRACK CLIMBER (6'6" DECK)
1	7146701	CHAMELEON II ENTRY & EXIT (5' - 6'6" DECK)
1	7146706	CHAMELEON II LEFT SECTION
1	7146706	CHAMELEON II LEFT SECTION
1	7146707	CHAMELEON II LONG STRAIGHT SECTION
1	7146078	BRAIDED CLIMBER (8' DECK)
1	714734	SAFETY PANEL AGES 5-12, FREE STANDING
9	714552	5" OD X 136" POST (3' TO 5' DECKS)
5	714553	5" OD X 160" POST (5'6" TO 6'6" DECKS)
1	7146615	DNA CLIMBER (5' DECK)
1	9991Z	BIBA ENTRY SIGN (NO PRICE)
1	9992Z	BIBA 6 POST MARKERS (NO PRICE)

PART 3 - INSTALLATION

1.1 INSTALLATION

A. Instructions: Explicit, printed installation instructions, written in English, shall be provided by the manufacturer, which shall include detailed, scaled plan views, elevations, and footing drawings and details when applicable, as well as sequential assembly instructions to assure proper installation of the playground equipment, structure or modular unit.

B. Equipment must be installed by a manufacturer-certified installer and must be installed in accordance with the manufacturer’s installation instructions. Installation crew leader must be CPSI-certified. If not installed by a manufacturer-certified installer, the equipment shall be inspected after installation by a CPSI not employed by the installer and signed off by said CPSI before the playground is opened for first use.

C. Close Out: Contractor shall provide the Owner with one copy of complete manufacturer’s installation instructions and maintenance kit if provided. Most manufacturers send at least two sets of installation manuals with each order. Additional sets of installation instructions should be purchased from the manufacturer if originals are lost or damaged. It is the Contractor’s responsibility to secure the installation instructions from the installer. Miracle Recreation mails one complete set of installation instructions directly to the Owner, and the Contractor shall not be required to supply additional sets to the Owner.

D. Clean Up: The site shall be kept clean and free of tools, trash, debris and installation materials on a daily basis. Material may be stored on site during installation with appropriate protective measures and approval by the Owner’s representative.

END OF SECTION

PLASTIC LAMINATE CASEWORK SCHEDULE

ITEM NO.	MANUF.	MANUF. NO. TO BE MODIFIED	DESCRIPTION	SIZE (INCHES)			REMARKS
				W	H	D	
MODIFIED AND CUSTOM CABINETS							
4001	TMI	K2032	COMBINATION TALL WARDROBE CABINET ABOVE: DOUBLE DOORS AND ONE ADJUSTABLE SHELF BELOW: OPEN WITH TWO HORIZONTAL DIVIDERS TO CREATE THREE EQUAL CUBES ABOVE AND THREE EQUAL CUBES BELOW AN OPEN AREA FOR COATS. FOUR DOUBLE COAT HOOKS ON BACK PANEL. ONE DOUBLE COAT HOOK ON LEFT END PANEL. ONE DOUBLE COAT HOOK ON RIGHT END PANEL.	36	90	18	SEE DETAIL ON DRAWINGS
4002	TMI	W1000	OPEN MAILBOX UNIT WITH THREE VERTICAL DIVIDERS SPACED EQUALLY AND 1/2" FIXED HORIZONTAL SHELVES SPACED EQUALLY TO PROVIDE A TOTAL OF (48) 3 1/2" HIGH COMPARTMENTS WITH A LABEL HOLDER AT EACH OPENING (A TOTAL OF 48).	45	48	13	-

SECTION 122413

ROLLER WINDOW SHADES

PART 1 - GENERAL

1.1 RELATED DOCUMENTS

A. Drawings and general provisions of the Contract, including General and Supplementary Conditions and Division 01 Specification Sections, apply to this Section.

1.2 SUMMARY

A. Section Includes:

1. Manually operated roller shades with single rollers.

1.3 ACTION SUBMITTALS

A. Product Data: For each type of product.

1. Include construction details, material descriptions, dimensions of individual components and profiles, features, finishes, and operating instructions for roller shades.

B. Shop Drawings: Show fabrication and installation details for roller shades, including shadeband materials, their orientation to rollers, and their seam and batten locations.

C. Samples: For each type of roller shade.

1. Shadeband Material: Not less than 10 inches square. Mark interior face of material if applicable.
2. Roller Shade: Full-size operating unit, not less than 16 inches wide by 36 inches long for each type of roller shade indicated.
3. Installation Accessories: Full-size unit, not less than 10 inches long.

1.4 INFORMATIONAL SUBMITTALS

A. Qualification Data: For Installer.

B. Product Certificates: For each type of shadeband material.

C. Product Test Reports: For each type of shadeband material, for tests performed by manufacturer and witnessed by a qualified testing agency.

1.5 CLOSEOUT SUBMITTALS

A. Operation and Maintenance Data: For roller shades to include in maintenance manuals.

1.6 MAINTENANCE MATERIAL SUBMITTALS

A. Furnish extra materials that match products installed and that are packaged with protective covering for storage and identified with labels describing contents.

1. Roller Shades: Full-size units equal to 5 percent of quantity installed for each size, color, and shadeband material indicated, but no fewer than two units.

1.7 QUALITY ASSURANCE

A. Installer Qualifications: Fabricator of products.

1.8 DELIVERY, STORAGE, AND HANDLING

A. Deliver roller shades in factory packages, marked with manufacturer, product name, and location of installation using same designations indicated on Drawings.

1.9 FIELD CONDITIONS

A. Environmental Limitations: Do not install roller shades until construction and finish work in spaces, including painting, is complete and dry and ambient temperature and humidity conditions are maintained at the levels indicated for Project when occupied for its intended use.

B. Field Measurements: Where roller shades are indicated to fit to other construction, verify dimensions of other construction by field measurements before fabrication and indicate measurements on Shop Drawings. Allow clearances for operating hardware of operable glazed units through entire operating range. Notify Architect of installation conditions that vary from Drawings. Coordinate fabrication schedule with construction progress to avoid delaying the Work.

PART 2 - PRODUCTS

2.1 MANUFACTURERS

A. Source Limitations: Obtain roller shades from single source from single manufacturer.

2.2 MANUALLY OPERATED SHADES WITH SINGLE ROLLERS

A. Basis of Design Product Subject to compliance with requirements, provide MechoShade Systems; Mecho/5 roller-shade system, or comparable product by one of the following:

1. Draper Inc.
2. Hunter Douglas Contract.
3. Lutron Electronics Co., Inc.
4. OEM Shades Inc.

B. Chain-and-Clutch Operating Mechanisms: With continuous-loop bead chain and clutch that stops shade movement when bead chain is released; permanently adjusted and lubricated.

1. Bead Chains: Manufacturer's standard.

    a. Loop Length: Full length of roller shade.
    b. Limit Stops: Provide upper and lower ball stops.
    c. Chain-Retainer Type: Clip, jamb mount.

C. Rollers: Corrosion-resistant steel or extruded-aluminum tubes of diameters and wall thicknesses required to accommodate operating mechanisms and weights and widths of shadebands indicated without deflection. Provide with permanently lubricated drive-end assemblies and idle-end assemblies designed to facilitate removal of shadebands for service.

1. Roller Drive-End Location: Right side of interior face of shade.
2. Direction of Shadeband Roll: Regular, from back (exterior face) of roller.
3. Shadeband-to-Roller Attachment: Manufacturer's standard method.

D. Mounting Hardware: Brackets or endcaps, corrosion resistant and compatible with roller assembly, operating mechanism, installation accessories, and mounting location and conditions indicated.

E. Shadebands:

1. Shadeband Material: Light-filtering fabric, and Black-out fabric at locations indicated in Section 090600.
2. Shadeband Bottom (Hem) Bar: Steel or extruded aluminum.

    a. Type: Enclosed in sealed pocket of shadeband material.
    b. Color and Finish: Refer to Section 090600.

F. Installation Accessories:

1. Front Fascia: Aluminum extrusion that conceals front and underside of roller and operating mechanism and attaches to roller endcaps without exposed fasteners.

    a. Shape: L-shaped.
    b. Height: Manufacturer's standard height required to conceal roller and shadeband assembly when shade is fully open, but not less than 4 inches.
    c. Color: As selected by Architect from manufacturer's full range.

2. Exposed Headbox: Rectangular, extruded-aluminum enclosure including front fascia, top and back covers, endcaps, and removable bottom closure.

    a. Height: Manufacturer's standard height required to enclose roller and shadeband assembly when shade is fully open, but not less than 4 inches.

2.3 SHADEBAND MATERIALS

A. Shadeband Material Flame-Resistance Rating: Comply with NFPA 701. Testing by a qualified testing agency. Identify products with appropriate markings of applicable testing agency.

B. Light-Filtering Fabric: Woven fabric, stain and fade resistant.

1. MechShade ThermoVeil Dense Basket Weave, 1500 Series.
2. 3 percent open, 2 x 2 basketweave pattern.
3. 75 percent PVC (coating), 25 percent polyester (yarn).

4. NFPA 701-2004: Pass.
5. Color: As selected by Architect from manufacturer's full range.

C. Light-Blocking Fabric: Opaque fabric, stain and fade resistant.

1. MechShade Chelsea, 0250 Series.
2. Zero percent open, Opaque.
3. 50 percent polyester (base), 50 percent foam (backing).
4. NFPA 701-2010: Pass.
5. Color: Refer to Section 090600.

2.4 ROLLER SHADE FABRICATION

A. Product Safety Standard: Fabricate roller shades to comply with WCMA A 100.1, including requirements for flexible, chain-loop devices; lead content of components; and warning labels.

B. Unit Sizes: Fabricate units in sizes to fill window and other openings as follows, measured at 74 deg F:

1. Between (Inside) Jamb Installation: Width equal to jamb-to-jamb dimension of opening in which shade is installed less 1/4 inch per side or 1/2-inch total, plus or minus 1/8 inch. Length equal to head-to-sill or -floor dimension of opening in which shade is installed less 1/4 inch, plus or minus 1/8 inch.
2. Outside of Jamb Installation: Width and length as indicated, with terminations between shades of end-to-end installations at centerlines of mullion or other defined vertical separations between openings.

C. Shadeband Fabrication: Fabricate shadebands without battens or seams to greatest extent possible.

PART 3 - EXECUTION

3.1 EXAMINATION

A. Examine substrates, areas, and conditions, with Installer present, for compliance with requirements for installation tolerances, operational clearances, and other conditions affecting performance of the Work.

B. Proceed with installation only after unsatisfactory conditions have been corrected.

3.2 ROLLER SHADE INSTALLATION

A. Install roller shades level, plumb, and aligned with adjacent units according to manufacturer's written instructions.

3.3 ADJUSTING

A. Adjust and balance roller shades to operate smoothly, easily, safely, and free from binding or malfunction throughout entire operational range.

3.4 CLEANING AND PROTECTION

A. Clean roller shade surfaces, after installation, according to manufacturer's written instructions.

B. Provide final protection and maintain conditions, in a manner acceptable to manufacturer and Installer that ensure that roller shades are without damage or deterioration at time of Substantial Completion.

C. Replace damaged roller shades that cannot be repaired, in a manner approved by Architect, before time of Substantial Completion.

END OF SECTION

SECTION 123623.13

PLASTIC-LAMINATE-CLAD COUNTERTOPS

PART 1 - GENERAL

1.1 RELATED DOCUMENTS

A. Drawings and general provisions of the Contract, including General and Supplementary Conditions and Division 01 Specification Sections, apply to this Section.

1.2 SUMMARY

A. Section includes plastic-laminate-clad countertops.

1.3 ACTION SUBMITTALS

A. Product Data: For each type of product.

B. Shop Drawings: For plastic-laminate-clad countertops.

1. Include plans, sections, details, and attachments to other work. Detail fabrication and installation, including field joints.
2. Show locations and sizes of cutouts and holes for items installed in plastic-laminate-clad countertops.
3. Apply AWI Quality Certification Program label to Shop Drawings.

C. Samples for Initial Selection: For plastic laminates.

D. Samples for Verification: As follows:

1. Plastic Laminates: For each type, color, pattern, and surface finish required, 8 by 10 inches in size.

E. Qualification Data: For Installer and fabricator.

F. Product Certificates: For the following:

1. Composite wood and agrifiber products.
2. High-pressure decorative laminate.
3. Adhesives.

G. Quality Standard Compliance Certificates: AWI Quality Certification Program.

1.4 QUALITY ASSURANCE

A. Fabricator Qualifications: Shop that employs skilled workers who custom fabricate products similar to those required for this Project and whose products have a record of successful in-service performance.

1. Shop Certification: AWI's Quality Certification Program accredited participant.

B. Installer Qualifications: AWI's Quality Certification Program accredited participant.

1.5 DELIVERY, STORAGE, AND HANDLING

A. Deliver countertops only after casework and supports on which they will be installed have been completed in installation areas.

B. Store countertops in areas where environmental conditions comply with requirements specified in "Field Conditions" Article.

C. Keep surfaces of countertops covered with protective covering during handling and installation.

1.6 FIELD CONDITIONS

A. Environmental Limitations: Do not deliver or install countertops until building is enclosed, wet work is complete, and HVAC system is operating and maintaining temperature and relative humidity at occupancy levels during the remainder of the construction period.

B. Field Measurements: Where countertops are indicated to fit to other construction, verify dimensions of other construction by field measurements before fabrication and indicate measurements on Shop Drawings. Coordinate fabrication schedule with construction progress to avoid delaying the Work.

PART 2 - PRODUCTS

2.1 PLASTIC-LAMINATE-CLAD COUNTERTOPS

A. Quality Standard: Unless otherwise indicated, comply with the "Architectural Woodwork Standards" for grades of plastic-laminate-clad countertops indicated for construction, finishes, installation, and other requirements.

B. Grade: Custom.

C. High-Pressure Decorative Laminate: NEMA LD 3, Grade HGS.

1. Manufacturers: Subject to compliance with requirements, available manufacturers offering products that may be incorporated into the Work include, but are not limited to, the following:

a. Wilsonart.

D. Colors, Patterns, and Finishes: Refer to Section 090600.

E. Edge Treatment: Same as laminate cladding on horizontal surfaces.

F. Core Material: Particleboard.

G. Core Thickness: 1-1/4 inch.

H. Backer Sheet: Provide plastic-laminate backer sheet, NEMA LD 3, Grade BKL, on underside of countertop substrate.

I. Backsplash: 3/4 by 4 inches.

2.2 WOOD MATERIALS

A. Composite Wood and Agrifiber Products: Provide materials that comply with requirements of referenced quality standard for each type of countertop and quality grade specified unless otherwise indicated.

1. Particleboard: ANSI A208.1, Grade M-2.

2.3 MISCELLANEOUS MATERIALS

A. Adhesives: Type recommended by plastic laminate manufacturer.

2.4 FABRICATION

A. Fabricate countertops to dimensions, profiles, and details indicated. Provide front and end overhang of 1 inch over base cabinets.

B. Complete fabrication, including assembly, to maximum extent possible before shipment to Project site. Disassemble components only as necessary for shipment and installation. Where necessary for fitting at site, provide ample allowance for scribing, trimming, and fitting.

C. Shop cut openings to maximum extent possible to receive appliances, plumbing fixtures, electrical work, and similar items. Locate openings accurately, and use templates or roughing-in diagrams to produce accurately sized and shaped openings. Sand edges of cutouts to remove splinters and burrs.

D. Provide tops in continuous lengths (as long as practical). Provide field glued splines at joints. No joints closer than 24 inches either side of sink cutout.

PART 3 - EXECUTION

3.1 PREPARATION

A. Before installation, condition countertops to average prevailing humidity conditions in installation areas.

B. Before installing countertops, examine shop-fabricated work for completion and complete work as required, including removal of packing.

3.2 INSTALLATION

A. Grade: Install countertops to comply with same grade as item to be installed.

B. Assemble countertops and complete fabrication at Project site to the extent that it was not completed in the shop.

1. Provide cutouts for appliances, plumbing fixtures, electrical work, and similar items. Locate openings accurately, and use templates or roughing-in diagrams to produce accurately sized and shaped openings. Sand edges of cutouts to remove splinters and burrs.

C. Field Jointing: Where possible, make in the same manner as shop jointing, using splines, adhesives, and fasteners recommended by manufacturer. Prepare edges to be joined in shop so Project-site processing of top and edge surfaces is not required. Locate field joints where shown on Shop Drawings.

1. Secure field joints in plastic-laminate countertops with concealed clamping devices located within 6 inches of front and back edges and at intervals not exceeding 24 inches Tighten according to manufacturer's written instructions to exert a constant, heavy-clamping pressure at joints.

D. Install countertops level, plumb, true, and straight. Shim as required with concealed shims. Install level and plumb to a tolerance of 1/8 inch in 96 inches

E. Scribe and cut countertops to fit adjoining work, refinish cut surfaces, and repair damaged finish at cuts.

F. Countertops: Anchor securely by screwing through corner blocks of base cabinets or other supports into underside of countertop.

1. Install countertops with no more than 1/8 inch in 96-inchsag, bow, or other variation from a straight line.
2. Secure backsplashes to tops with concealed metal brackets at 16 inches o.c. and to walls with adhesive.
3. Seal junctures of tops, splashes, and walls with mildew-resistant silicone sealant or another permanently elastic sealing compound recommended by countertop material manufacturer.

3.3 ADJUSTING AND CLEANING

A. Repair damaged and defective countertops, where possible, to eliminate functional and visual defects. Where not possible to repair, replace countertops. Adjust joinery for uniform appearance.

B. Clean countertops on exposed and semiexposed surfaces.

C. Protection: Provide Kraft paper or other suitable covering over countertop surfaces, taped to underside of countertop at a minimum of 48 inches o.c. Remove protection at Substantial Completion.

END OF SECTION

SECTION 123661.16

SOLID SURFACING COUNTERTOPS

PART 1 - GENERAL

1.1 RELATED DOCUMENTS

A. Drawings and general provisions of the Contract, including General and Supplementary Conditions and Division 01 Specification Sections, apply to this Section.

1.2 SUMMARY

A. Section Includes:

1. Solid surface material countertops.
2. Solid surface material backsplashes.
3. Solid surface material end splashes.

1.3 ACTION SUBMITTALS

A. Product Data: For countertop materials.

B. Shop Drawings: For countertops. Show materials, finishes, edge and backsplash profiles, methods of joining, and cutouts for plumbing fixtures.

1. Show locations and details of joints.
2. Show direction of directional pattern, if any.

C. Samples for Initial Selection: For each type of material exposed to view.

D. Samples for Verification: For the following products:

1. Countertop material, 6 inches square.

1.4 INFORMATIONAL SUBMITTALS

A. Qualification Data: For fabricator.

1.5 CLOSEOUT SUBMITTALS

A. Maintenance Data: For solid surface material countertops to include in maintenance manuals. Include Product Data for care products used or recommended by Installer and names, addresses, and telephone numbers of local sources for products.

1.6 QUALITY ASSURANCE

A. Fabricator Qualifications: Shop that employs skilled workers who custom-fabricate countertops similar to that required for this Project, and whose products have a record of successful in-service performance.

B. Installer Qualifications: Fabricator of countertops.

C. Mockups: Build mockups to demonstrate aesthetic effects and to set quality standards for fabrication and execution.

1. Build mockup of typical countertop as shown on Drawings.

1.7 FIELD CONDITIONS

A. Field Measurements: Verify dimensions of countertops by field measurements after base cabinets are installed but before countertop fabrication is complete.

1.8 COORDINATION

A. Coordinate locations of utilities that will penetrate countertops or backsplashes.

PART 2 - PRODUCTS

2.1 SOLID SURFACE COUNTERTOP MATERIALS

A. Solid Surface Material: Homogeneous-filled plastic resin complying with ICPA SS-1.

1. Manufacturers: Subject to compliance with requirements, available manufacturers offering products that may be incorporated into the Work include, but are not limited to the following:

a. E. I. du Pont de Nemours and Company (Corian).

2. Type: Provide Standard type unless Special Purpose type is indicated.
3. Colors and Patterns: Refer to Section 090600.

B. Particleboard: ANSI A208.1, Grade M-2.

2.2 COUNTERTOP FABRICATION

A. Fabricate countertops according to solid surface material manufacturer's written instructions and to the AWI/AWMAC/WI's "Architectural Woodwork Standards."

1. Grade: Custom.

B. Configuration: As indicated on Drawings.

C. Countertops: 1/2-inch- thick, solid surface material with front edge built up to 1-1/2 inches with same material.

D. Backsplashes: 1/2-inch- thick, solid surface material.

E. Fabricate tops with shop-applied edges as indicated on Drawings, unless otherwise indicated. Comply with solid surface material manufacturer's written instructions for adhesives, sealers, fabrication, and finishing.

1. Fabricate with loose backsplashes for field assembly.

F. Joints: Fabricate countertops in sections for joining in field, with joints at locations indicated.

1. Joint Locations: Not within 18 inches of a sink or cooktop and not where a countertop section less than 36 inches long would result, unless unavoidable.

G. Cutouts and Holes:

1. Undercounter Plumbing Fixtures: Make cutouts for fixtures in shop using template or pattern furnished by fixture manufacturer. Form cutouts to smooth, even curves.

a. Provide vertical edges, slightly eased at juncture of cutout edges with top and bottom surfaces of countertop and projecting 3/16 inch into fixture opening.

2. Counter-Mounted Plumbing Fixtures: Prepare countertops in shop for field cutting openings for counter-mounted fixtures. Mark tops for cutouts and drill holes at corners of cutout locations. Make corner holes of largest radius practical.
3. Fittings: Drill countertops in shop for plumbing fittings, undercounter soap dispensers, and similar items.

2.3 INSTALLATION MATERIALS

A. Adhesive: Product recommended by solid surface material manufacturer.

B. Sealant for Countertops: Comply with applicable requirements in Section 079200 "Joint Sealants."

PART 3 - EXECUTION

3.1 EXAMINATION

A. Examine substrates to receive solid surface material countertops and conditions under which countertops will be installed, with Installer present, for compliance with requirements for installation tolerances and other conditions affecting performance of countertops.

B. Proceed with installation only after unsatisfactory conditions have been corrected.

3.2 INSTALLATION

A. Install countertops level to a tolerance of 1/8 inch in 8 feet, 1/4-inch maximum. Do not exceed 1/64-inch difference between planes of adjacent units.

B. Fasten subtops to cabinets by screwing through subtops into cornerblocks of base cabinets. Shim as needed to align subtops in a level plane.

C. Secure countertops to subtops with adhesive according to solid surface material manufacturer's written instructions. Align adjacent surfaces and, using adhesive in color to match countertop, form seams to comply with manufacturer's written instructions. Carefully dress joints smooth, remove surface scratches, and clean entire surface.

D. Bond joints with adhesive and draw tight as countertops are set. Mask areas of countertops adjacent to joints to prevent adhesive smears.

1. Clamp units to temporary bracing, supports, or each other to ensure that countertops are properly aligned and joints are of specified width.

E. Install backsplashes and end splashes by adhering to wall and countertops with adhesive. Mask areas of countertops and splashes adjacent to joints to prevent adhesive smears.

F. Install aprons to backing and countertops with adhesive. Mask areas of countertops and splashes adjacent to joints to prevent adhesive smears. Fasten by screwing through backing. Predrill holes for screws as recommended by manufacturer.

G. Complete cutouts not finished in shop. Mask areas of countertops adjacent to cutouts to prevent damage while cutting. Make cutouts to accurately fit items to be installed, and at right angles to finished surfaces unless beveling is required for clearance. Ease edges slightly to prevent snipping.

H. Apply sealant to gaps at walls; comply with Section 079200 "Joint Sealants."

END OF SECTION

SECTION 124813

ENTRANCE FLOOR MATS AND FRAMES

PART 1 - GENERAL

1.1 RELATED DOCUMENTS

A. Drawings and general provisions of the Contract, including General and Supplementary Conditions and Division 01 Specification Sections, apply to this Section.

1.2 SUMMARY

A. Section Includes:

1. Roll-up rail mats.
2. Recessed frames.

1.3 COORDINATION

A. Coordinate size and location of recesses in concrete to receive floor mats and frames.

1.4 ACTION SUBMITTALS

A. Product Data: For each type of product.

1. Include construction details, material descriptions, dimensions of individual components and profiles, and finishes for floor mats and frames.

B. Shop Drawings:

1. Items penetrating floor mats and frames, including door control devices.
2. Divisions between mat sections.
3. Perimeter floor frames.

C. Samples: For the following products, in manufacturer's standard sizes:

1. Floor Mat: Assembled sections of floor mat.
2. Tread Rail: Sample of each type and color.
3. Frame Members: Sample of each type and color.

1.5 CLOSEOUT SUBMITTALS

A. Maintenance Data: For floor mats and frames to include in maintenance manuals.

1.6 MAINTENANCE MATERIAL SUBMITTALS

A. Furnish extra materials that match products installed and that are packaged with protective covering for storage and identified with labels describing contents.

1. Resilient-Tile Entrance Mats: Full-size tile units equal to 2 percent of amount installed, but no fewer than 10 units.

PART 2 - PRODUCTS

2.1 ENTRANCE FLOOR MATS AND FRAMES, GENERAL

A. Structural Performance: Provide roll-up rail mats and frames capable of withstanding the following loads and stresses within limits and under conditions indicated:

1. Uniform floor load of 300 lbf/sq. ft.
2. Wheel load of 350 lb per wheel.

B. Accessibility Standard: Comply with applicable provisions in the DOJ's "2010 ADA Standards for Accessible Design" and ICC A117.1.

2.2 ROLL-UP RAIL MATS

A. Manufacturers: Subject to compliance with requirements, available manufacturers offering products that may be incorporated into the Work include, but are not limited to the following:

1. C/S Group.
2. Kadee Industries, Inc.
3. Musson Rubber Co.
4. Pawling Corporation.
5. Reese Enterprises, Inc.

B. Roll-up, Aluminum-Rail Hinged Mats: Extruded-aluminum tread rails 2 inches wide by 3/8-inch-thick, sitting on continuous vinyl cushions.

1. Tread Inserts: 1/4-inch-high, 28-oz./sq. yd. weight, level-cut, nylon-pile, fusion-bonded carpet.
2. Colors, Textures, and Patterns of Inserts: As selected by Architect from full range of industry colors.
3. Rail Color: Mill finish.
4. Hinges: Aluminum.
5. Mat Size: As indicated on Drawings.

2.3 FRAMES

A. Recessed Frames: Manufacturer's standard extrusion.

1. Extruded Aluminum: ASTM B 221, Alloy 6061-T6 or Alloy 6063-T5, T6, or T52.

a. Color: Mill finish.

2. Architectural Bronze: ASTM B 455, Alloy UNS No. C38500.

2.4 CONCRETE FILL AND GROUT MATERIALS

A. Provide concrete fill and grout equivalent in strength to cast-in-place concrete slabs for recessed mats and frames. Use aggregate no larger than one-third fill thickness.

2.5 FABRICATION

A. Floor Mats: Shop fabricate units to greatest extent possible in sizes indicated. Unless otherwise indicated, provide single unit for each mat installation; do not exceed manufacturer's recommended maximum sizes for units that are removed for maintenance and cleaning. Where joints in mats are necessary, space symmetrically and away from normal traffic lanes. Miter corner joints in framing elements with hairline joints or provide prefabricated corner units without joints.

B. Recessed Frames: As indicated, for permanent recessed installation, complete with corner pins or reinforcement and anchorage devices.

1. Fabricate edge-frame members in single lengths or, where frame dimensions exceed maximum available lengths, provide minimum number of pieces possible, with hairline joints equally spaced and pieces spliced together by straight connecting pins.

C. Coat concealed surfaces of aluminum frames that contact cementitious material with manufacturer's standard protective coating.

2.6 ALUMINUM FINISHES

A. Mill finish.

PART 3 - EXECUTION

3.1 EXAMINATION

A. Examine substrates and floor conditions for compliance with requirements for location, sizes, minimum recess depth, and other conditions affecting installation of floor mats and frames.

B. Proceed with installation only after unsatisfactory conditions have been corrected.

3.2 INSTALLATION

A. Install recessed mat frames and mats to comply with manufacturer's written instructions so that tops of mats will be flush with adjoining finished flooring. Set mats with tops at height recommended by manufacturer for most effective cleaning action; coordinate tops of mat surfaces with bottoms of doors that swing across mats to provide clearance between door and mat.

1. Install necessary shims, spacers, and anchorages for proper location, and secure attachment of frames.

2. Install grout and fill around frames and, if required to set mat tops at proper elevations, in recesses under mats. Finish grout and fill smooth and level.
3. Delay setting mats until construction traffic has ended.

3.3 PROTECTION

A. After completing frame installation and concrete work, provide temporary filler of plywood or fiberboard in recesses and cover frames with plywood protective flooring. Maintain protection until construction traffic has ended and Project is near Substantial Completion.

END OF SECTION

SECTION 142123.16

MACHINE ROOM-LESS ELECTRIC TRACTION PASSENGER ELEVATORS

PART 1 - GENERAL

1.1 RELATED DOCUMENTS

A. Drawings and general provisions of the Contract, including General and Supplementary Conditions and Division 01 Specification Sections, apply to this Section.

1.2 SUMMARY

A. Section includes machine-room-less electric traction passenger elevators.

1.3 DEFINITIONS

A. Definitions in ASME A17.1/CSA B44 apply to work of this Section.

1.4 ACTION SUBMITTALS

A. Product Data: For each type of product.

1. Include capacities, sizes, performances, operations, safety features, finishes, and similar information.
2. Include Product Data for car enclosures, hoistway entrances, and operation, control, and signal systems.

B. Shop Drawings:

1. Include plans, elevations, sections, and large-scale details indicating service at each landing, coordination with building structure, relationships with other construction, and locations of equipment.
2. Include large-scale layout of car-control station and standby power operation control panel.
3. Indicate maximum dynamic and static loads imposed on building structure at points of support, and maximum and average power demands.

1.5 INFORMATIONAL SUBMITTALS

A. Qualification Data: For Installer.

B. Seismic Qualification Certificates: For elevator equipment, accessories, and components, from manufacturer.

1. Basis for Certification: Indicate whether withstand certification is based on actual test of assembled components or on calculation.
2. Dimensioned Outline Drawings of Equipment Unit: Identify center of gravity and locate and describe mounting and anchorage provisions.
3. Detailed description of equipment anchorage devices on which the certification is based and their installation requirements.

C. Manufacturer Certificates: Signed by elevator manufacturer certifying that hoistway, pit, and control closet layout and dimensions, as shown on Drawings, and electrical service including standby power generator, as shown and specified, are adequate for elevator system being provided.

D. Sample Warranty: For special warranty.

1.6 CLOSEOUT SUBMITTALS

A. Operation and Maintenance Data: For elevators to include in emergency, operation, and maintenance manuals.

B. Inspection and Acceptance Certificates and Operating Permits: As required by authorities having jurisdiction for normal, unrestricted elevator use.

C. Continuing Maintenance Proposal: Submit a continuing maintenance proposal from Installer to Owner, in the form of a standard one-year maintenance agreement, starting on date initial maintenance service is concluded. State services, obligations, conditions, and terms for agreement period and for future renewal options.

1.7 QUALITY ASSURANCE

A. Installer Qualifications: Elevator manufacturer or an authorized representative who is trained and approved by manufacturer.

1.8 DELIVERY, STORAGE, AND HANDLING

A. Deliver, store, and handle materials, components, and equipment in manufacturer's protective packaging. Store materials, components, and equipment off of ground, under cover, and in a dry location.

1.9 COORDINATION

A. Coordinate installation of sleeves, block outs, elevator equipment with integral anchors, and other items that are embedded in concrete or masonry for elevator equipment. Furnish templates, sleeves, elevator equipment with integral anchors, and installation instructions and deliver to Project site in time for installation.

B. Coordinate locations and dimensions of other work relating to electric traction elevators including pit ladders; sumps and floor drains in pits; entrance subsills; electrical service; and electrical outlets, lights, and switches in hoistways, pits, and machine rooms.

1.10 WARRANTY

A. Manufacturer's Special Warranty: Manufacturer agrees to repair, restore, or replace elevator work that fails in materials or workmanship within specified warranty period.

1. Failures include, but are not limited to, operation or control system failure, including excessive malfunctions; performances below specified ratings; excessive wear; unusual deterioration or aging of materials or finishes; unsafe conditions; need for excessive maintenance; abnormal noise or vibration; and similar unusual, unexpected, and unsatisfactory conditions.
2. Warranty Period: 1 year from date of Substantial Completion.

PART 2 - PRODUCTS

2.1 MANUFACTURERS

A. Basis-of-Design Product: Subject to compliance with requirements, provide Otis Elevator Co.; Gen2 Gearless Traction Elevator, or comparable product by one of the following:

1. KONE, Inc.
2. Mitsubishi Electric Corporation.
3. Schindler Elevator Corp.
4. ThyssenKrupp Elevator.

B. Source Limitations: Obtain elevators from single manufacturer.

1. Major elevator components, including driving machines, controllers, signal fixtures, door operators, car frames, cars, and entrances, shall be manufactured by single manufacturer.

2.2 PERFORMANCE REQUIREMENTS

A. Regulatory Requirements: Comply with ASME A17.1/CSA B44.

B. Accessibility Requirements: Comply with requirements for accessible elevators in the United States Access Board's ADA-ABA Accessibility Guidelines and with ICC A117.1.

2.3 ELEVATORS

A. Elevator System, General: Manufacturer's standard elevator systems. Unless otherwise indicated, manufacturer's standard components shall be used, as included in standard elevator systems and as required for complete system.

B. Elevator Description:

1. Elevator Number(s): 1.
2. Machine Location: Hoistway; no machine room is provided.
3. Machine Type: Gearless traction.
4. Rated Load: 2500 lb.
5. Rated Speed: 150 fpm.
6. Operation System: Selective-collective automatic operation.
7. Auxiliary Operations:

a. Standby power operation.
b. Standby-powered lowering.
c. Battery-powered lowering.
d. Automatic dispatching of loaded car.
e. Nuisance call cancel.

8. Security Features:

a. Card-reader operation.
b. Access key switch at top & lowest floor in jamb.

9. Car Enclosures:

a. Inside Width: 6’ 5-9/16” from side wall to side wall.
b. Inside Depth: 4’ 3-9/16” from back wall to front wall (return panels).
c. Inside Height: 7’ 9” to underside of ceiling.
d. Front Walls (Return Panels): Satin stainless steel, No. 4 finish.
e. Side and Rear Wall Panels: As selected by Architect.
f. Reveals: Satin stainless steel, No. 4 finish.
g. Door Faces (Interior): Satin stainless steel, No. 4 finish.
h. Door Sills: Aluminum, mill finish.
i. Ceiling: Satin stainless steel, No. 4 finish.
j. Handrails: 1-1/2 inches round satin stainless steel, No. 4 finish, at rear of car.
k. Floor: Refer to Section 096519 Resilient Tile Flooring for Luxury Vinyl Tile.
l. Floor Thickness, Including Setting Materials: 3/4 inch above plywood subfloor.

10. Hoistway Entrances:

a. Width: 42 inches.
b. Height: As indicated.
c. Type: Single-speed center opening.
d. Frames at Ground Floor Lobby: Satin stainless steel, No. 4 finish.
e. Frames at Other Floors: Enameled steel.
f. Doors and Transoms at Ground Floor Lobby: Satin stainless steel, No. 4 finish.
g. Doors and Transoms at Other Floors: Enameled steel.
h. Sills: Aluminum, mill finish.

11. Hall Fixtures: Satin stainless steel, No. 4 finish.
12. Additional Requirements:

a. Provide inspection certificate in each car, mounted under acrylic cover with frame made from satin stainless steel, No. 4 finish.
b. Provide hooks for protective pads in all cars and one complete set(s) of full-height protective pads.

2.4 TRACTION SYSTEMS

A. Elevator Machines: Variable-voltage, variable-frequency, ac-type hoisting machines or variable-voltage dc-type hoisting machines and solid-state power converters.

1. Provide regenerative or nonregenerative system.
2. Where regenerative system is provided, limit total harmonic distortion of regenerated power to 5 percent per IEEE 519.

3. Provide means for absorbing regenerated power when elevator system is operating on standby power.
4. Provide line filters or chokes to prevent electrical peaks or spikes from feeding back into building power system.

B. Fluid for Hydraulic Buffers: If using hydraulic buffers, use only fire-resistant fluid.

C. Inserts: Furnish required concrete and masonry inserts and similar anchorage devices for installing guide rails, machinery, and other components of elevator work. Device installation is specified in another Section.

D. Machine Beams: Provide framing to support elevator hoisting machine and deflector sheaves from the building structure. Comply with Section 055000 "Metal Fabrications" for materials and fabrication.

E. Car Frame and Platform: Bolted- or welded-steel units.

F. Guides: Roller guides or polymer-coated, nonlubricated sliding guides. Provide guides at top and bottom of car and counterweight frames.

2.5 OPERATION SYSTEMS

A. General: Provide manufacturer's standard microprocessor operation systems as required to provide type of operation indicated.

B. Auxiliary Operations: In addition to primary operation system features, provide the following operational features for elevators where indicated:

1. Group Standby Power Operation: On activation of standby power, cars are returned to a designated floor and parked with doors open. One car is returned at a time, with priority given to loaded cars. If a car cannot be returned after two attempts, it is removed from the system. When all cars have been returned or removed from the system, one car is automatically placed in service. If car selected for service cannot operate within 60 seconds, the system removes car from service and places another car in service. Cars can be manually put in service on standby power, either for return operation or for regular operation, by switches in control panel located at main lobby. Manual operation causes automatic operation to cease.
2. Group Battery-Powered Automatic Evacuation: If power fails, cars that are at a floor remain at that floor, open their doors, and shut down. Cars that are between floors are moved one at a time to the next floor above or below, open their doors, and shut down. System includes rechargeable battery and automatic recharging system.
3. Automatic Dispatching of Loaded Car: When car load exceeds 80 percent of rated capacity, doors begin closing.
4. Nuisance Call Cancel: When car calls exceed a preset number while car load is less than a predetermined weight, all car calls are canceled. Preset number of calls and predetermined weight can be adjusted.

C. Security Features: Provide the following security features, where indicated. Security features shall not affect emergency firefighters' service.

1. Card-Reader Operation: System uses card readers at car-control stations to authorize calls. Security system determines which landings and at what times calls require authorization by card reader. Provide required conductors in traveling cable and panel in

machine room for interconnecting card readers, other security access system equipment, and elevator controllers. Allow space as indicated for card reader in car.

a. Coordinate security access system equipment with Owner's security vendor.

2. Keyswitch Operation: Push buttons are activated and deactivated by security keyswitches at car-control stations. Key is removable in either position.
3. Car-to-Lobby Feature: Feature, activated by keyswitch at main lobby, that causes car to return immediately to lobby and open doors for inspection. On deactivation by keyswitch, calls registered before keyswitch activation are completed and normal operation is resumed.

2.6 DOOR REOPENING DEVICES

A. Infrared Array: Provide door reopening device with uniform array of 36 or more microprocessor-controlled, infrared light beams projecting across car entrance. Interruption of one or more light beams shall cause doors to stop and reopen.

B. Nudging Feature: After car doors are prevented from closing for predetermined adjustable time, through activating door reopening device, a loud buzzer shall sound and doors shall begin to close at reduced kinetic energy.

2.7 CAR ENCLOSURES

A. General: Provide steel-framed car enclosures with nonremovable wall panels, with car roof, access doors, power door operators, and ventilation.

1. Provide standard railings complying with ASME A17.1/CSA B44 on car tops where required by ASME A17.1/CSA B44.

B. Materials and Finishes: Manufacturer's standards, but not less than the following:

1. Subfloor: Exterior, C-C Plugged grade plywood, not less than 7/8-inch nominal thickness.
2. Floor Finish: Thin set stone or ceramic tile.
3. Wall Panels: Colors as selected by Architect from manufacturer's full range.
4. Stainless-Steel Wall Panels: Flush, hollow-metal construction; fabricated from stainless-steel sheet.
5. Fabricate car with recesses and cutouts for signal equipment.
6. Fabricate car door frame integrally with front wall of car.
7. Stainless-Steel Doors: Flush, hollow-metal construction; fabricated from stainless-steel sheet.
8. Sight Guards: Provide sight guards on car doors.
9. Sills: Extruded metal, with grooved surface, 1/4 inch thick.
10. Metal Ceiling: Flush panels, with LED downlights. Align ceiling panel joints with joints between wall panels.
11. Handrails: Manufacturer's standard handrails, of shape, metal, and finish indicated.

2.8 HOISTWAY ENTRANCES

A. Hoistway Entrance Assemblies: Manufacturer's standard horizontal-sliding, door-and-frame hoistway entrances complete with track systems, hardware, sills, and accessories. Frame size and profile shall accommodate hoistway wall construction.

1. Where gypsum board wall construction is indicated, frames shall be self-supporting with reinforced head sections.

B. Fire-Rated Hoistway Entrance Assemblies: Door and frame assemblies shall comply with NFPA 80 and be listed and labeled by a testing and inspecting agency acceptable to authorities having jurisdiction based on testing at as close-to-neutral pressure as possible according to NFPA 252 or UL 10B.

1. Fire-Protection Rating: 1-1/2 hours.

C. Materials and Fabrication: Manufacturer's standards, but not less than the following:

1. Steel Subframes: Formed from cold- or hot-rolled steel sheet, with factory-applied enamel finish or rust-resistant primer. Fabricate to receive applied finish as indicated.
2. Stainless-Steel Frames: Formed from stainless-steel sheet. Install at ground floor lobby.
3. Stainless-Steel Doors: Flush, hollow-metal construction; fabricated from stainless-steel sheet. Install at ground floor lobby.
4. Sight Guards: Provide sight guards on doors matching door edges.
5. Sills: Extruded metal, with grooved surface, 1/4 inch thick.
6. Nonshrink, Nonmetallic Grout: Factory-packaged, nonstaining, noncorrosive, nongaseous grout complying with ASTM C 1107/C 1107M.

2.9 SIGNAL EQUIPMENT

A. General: Provide hall-call and car-call buttons that light when activated and remain lit until call has been fulfilled. Fabricate lighted elements with long-life lamps and acrylic or other permanent, non-yellowing translucent plastic diffusers or LEDs.

B. Swing-Return Car-Control Stations: Provide car-control stations mounted on rear of hinged return panel adjacent to car door and with buttons, switches, controls, and indicator lights projecting through return panel but substantially flush with face of return panel.

1. Mark buttons and switches for function. Use both tactile symbols and Braille.
2. Provide "No Smoking" sign matching car-control station, either integral with car-control station or mounted adjacent to it, with text and graphics as required by authorities having jurisdiction.

C. Emergency Communication System: Two-way voice communication system, with visible signal, which dials preprogrammed number of monitoring station and does not require handset use. System is contained in flush-mounted cabinet, with identification, instructions for use, and battery backup power supply.

D. Firefighters' Two-Way Telephone Communication Service: Provide flush-mounted cabinet in each car and required conductors in traveling cable for firefighters' two-way telephone communication service.

E. Car Position Indicator: Provide illuminated, digital-type car position indicator, located above car door or above car-control station. Also, provide audible signal to indicate to passengers that car is either stopping at or passing each of the floors served. Include travel direction arrows if not provided in car-control station.

F. Hall Push-Button Stations: Provide one hall push-button station at each landing.

1. Provide units with flat faceplate for mounting with body of unit recessed in wall.
2. Equip units with buttons for calling elevator and for indicating desired direction of travel.

G. Provide telephone jack in each unit for firefighters' two-way telephone communication service specified in Section 283100 "Fire Detection and Alarm."

1. Possibly insert a provision for either an "In Use" signal or a digital display of car position for single elevators.

H. Hall Lanterns: Units with illuminated arrows; but provide single arrow at terminal landings. Provide the following:

1. Units with flat faceplate for mounting with body of unit recessed in wall and with illuminated elements projecting from faceplate for ease of angular viewing.

I. Hall Annunciator: With each hall lantern, provide audible signals indicating car arrival and direction of travel. Signals sound once for up and twice for down.

1. At manufacturer's option, audible signals may be placed on cars.

J. Standby Power Elevator Selector Switches: Provide switches, as required by ASME A17.1/CSA B44, where indicated. Adjacent to switches, provide illuminated signal that indicates when normal power supply has failed. For each elevator, provide illuminated signals that indicate when they are operational and when they are at the designated emergency return level with doors open.

K. Fire-Command-Center Annunciator Panel: Provide panel containing illuminated position indicators for each elevator, clearly labeled with elevator designation; include illuminated signal that indicates when elevator is operational and when it is at the designated emergency return level with doors open. Provide standby power elevator selector switch(es), as required by ASME A17.1/CSA B44, adjacent to position indicators. Provide illuminated signal that indicates when normal power supply has failed.

L. Emergency Pictorial Signs: Fabricate from materials matching hall push-button stations, with text and graphics as required by authorities having jurisdiction, indicating that in case of fire, elevators are out of service and exits should be used instead. Provide one sign at each hall push-button station unless otherwise indicated.

2.10 FINISH MATERIALS

A. General: Provide the following materials for exposed parts of elevator car enclosures, car doors, hoistway entrance doors and frames, and signal equipment as indicated.

B. Cold-Rolled Steel Sheet: ASTM A 1008/A 1008M, commercial steel, Type B, exposed, matte finish.

C. Hot-Rolled Steel Sheet: ASTM A 1011/A 1011M, commercial steel, Type B, pickled.

D. Stainless-Steel Sheet: ASTM A 240/A 240M, Type 304.

E. Stainless-Steel Bars: ASTM A 276, Type 304.

F. Stainless-Steel Tubing: ASTM A 554, Grade MT 304.

G. Aluminum Extrusions: ASTM B 221, Alloy 6063.

PART 3 - EXECUTION

3.1 EXAMINATION

A. Examine elevator areas, with Installer present, for compliance with requirements for installation tolerances and other conditions affecting performance of the Work. Examine hoistways, hoistway openings, pits, and machine rooms as constructed; verify critical dimensions; and examine supporting structure and other conditions under which elevator work is to be installed.

B. Prepare written report, endorsed by Installer, listing conditions detrimental to performance of the Work.

C. Proceed with installation only after unsatisfactory conditions have been corrected.

3.2 INSTALLATION

A. Comply with manufacturer's written instructions.

B. Welded Construction: Provide welded connections for installing elevator work where bolted connections are not required for subsequent removal or for normal operation, adjustment, inspection, maintenance, and replacement of worn parts. Comply with AWS standards for workmanship and for qualifications of welding operators.

C. Sound Isolation: Mount rotating and vibrating equipment on vibration-isolating mounts to minimize vibration transmission to structure and structure-borne noise due to elevator system.

D. Lubricate operating parts of systems, including ropes, as recommended by manufacturers.

E. Alignment: Coordinate installation of hoistway entrances with installation of elevator guide rails for accurate alignment of entrances with car. Where possible, delay final adjustment of sills and doors until car is operable in shaft. Reduce clearances to minimum, safe, workable dimension at each landing.

F. Leveling Tolerance: 1/8 inch, up or down, regardless of load and travel direction.

G. Set sills flush with finished floor surface at landing. Fill space under sill solidly with nonshrink, nonmetallic grout.

H. Locate hall signal equipment for elevators as follows unless otherwise indicated:

1. For groups of elevators, locate hall push-button stations between two elevators at center of group or at location most convenient for approaching passengers.
2. Place hall lanterns either above or beside each hoistway entrance.
3. Mount hall lanterns at a minimum of 72 inches above finished floor.

3.3 FIELD QUALITY CONTROL

A. Acceptance Testing: On completion of elevator installation and before permitting elevator use (either temporary or permanent), perform acceptance tests as required and recommended by ASME A17.1/CSA B44 and by governing regulations and agencies.

B. Advise Owner, Architect, and authorities having jurisdiction in advance of dates and times that tests are to be performed on elevators.

3.4 PROTECTION

A. Temporary Use: Comply with the following requirements for elevator used for construction purposes:

1. Provide car with temporary enclosure, either within finished car or in place of finished car, to protect finishes from damage.
2. Provide strippable protective film on entrance and car doors and frames.
3. Provide padded wood bumpers on entrance door frames covering jambs and frame faces.
4. Provide other protective coverings, barriers, devices, signs, and procedures as needed to protect elevator and elevator equipment.
5. Do not load elevators beyond their rated weight capacity.
6. Engage elevator Installer to provide full maintenance service. Include preventive maintenance, repair or replacement of worn or defective components, lubrication, cleanup, and adjustment as necessary for proper elevator operation at rated speed and capacity. Provide parts and supplies same as those used in the manufacture and installation of original equipment.
7. Engage elevator Installer to restore damaged work, if any, so no evidence remains of correction. Return items that cannot be refinished in the field to the shop, make required repairs and refinish entire unit, or provide new units as required.

3.5 DEMONSTRATION

A. Engage a factory-authorized service representative to train Owner's maintenance personnel to operate, adjust, and maintain elevator(s).

B. Check operation of elevator with Owner's personnel present before date of Substantial Completion and again not more than one month before end of warranty period. Determine that operation systems and devices are functioning properly.

3.6 MAINTENANCE

A. Initial Maintenance Service: Beginning at Substantial Completion, maintenance service shall include 12 months' full maintenance by skilled employees of elevator Installer. Include monthly preventive maintenance, repair or replacement of worn or defective components, lubrication, cleaning, and adjusting as required for proper elevator operation at rated speed and capacity. Parts and supplies shall be manufacturer's authorized replacement parts and supplies.

1. Perform maintenance during normal working hours.
2. Include 24-hour-per-day, 7-day-per-week emergency callback service with response time of one hour or less.

END OF SECTION

SECTION 144200

WHEELCHAIR LIFTS

PART 1 - GENERAL

1.1 RELATED DOCUMENTS

A. Drawings and general provisions of the Contract, including General and Supplementary Conditions and Division 01 Specification Sections, apply to this Section.

1.2 SUMMARY

A. Section Includes:

1. Vertical platform wheelchair lift.

1.3 ACTION SUBMITTALS

A. Product Data: For each type of product.

1. Submit manufacturer’s installation instructions, including preparation, storage and handling requirements.
2. Include complete description of performance and operating characteristics.
3. Show maximum and average power demands.

B. Shop Drawings: For each lift.

1. Show typical details of assembly, erection and anchorage.
2. Include wiring diagrams for power, control, and signal systems.
3. Show complete layout and location of equipment, including required clearances and coordination with shaftway.

C. Selection Samples: For each finished product specified provide, two complete sets of color chips representing manufacturer's full range of available colors and patterns.

1.4 QUALITY ASSURANCE

A. Manufacturer Qualifications: Firm with minimum 10 years experience in manufacturing of vertical platform lifts, with evidence of experience with similar installations of type specified.

B. Installer Qualifications: Licensed to install equipment of this scope, with evidence of experience with specified equipment. Installer shall maintain an adequate stock of replacement parts, have qualified people available to ensure fulfillment of maintenance and callback service without unreasonable loss of time in reaching project site.

1.5 DELIVERY, STORAGE, AND HANDLING

A. Store products in manufacturer's unopened packaging until ready for installation.

B. Store components off the ground in a dry covered area, protected from adverse weather conditions.

1.6 FIELD CONDITIONS

A. Do not use wheelchair lift for hoisting materials or personnel during construction period.

1.7 WARRANTY

A. Warranty: Manufacturer shall warrant the wheelchair lift materials and workmanship for one year following completion of installation.

PART 2 - PRODUCTS

2.1 PERFORMANCE REQUIREMENTS

A. Accessibility Requirements: Comply with applicable provisions in the U.S. Architectural & Transportation Barriers Compliance Board's ADA-ABA Accessibility Guidelines and ICC A117.1.

B. Regulatory Requirements: Provide platform lifts in compliance with:

1. ASME A18.1 - Safety Standard for Platform Lifts and Stairway Chairlifts.
2. NFPA 70 - National Electric Code.

2.2 VERTICAL PLATFORM LIFT

A. Unenclosed Vertical Wheelchair Platform Lift.

1. Basis-of-Design Product: Subject to compliance with requirements, provide National Wheel-O-Vator Co., Inc.: Model CDE-60, or comparable product by one of the following:

a. Concord Elevator.
b. Garaventa Lift.
c. Inclinator Company of America.
d. Liftavator, Inc.

B. Drive System:

1. Acme Screw: Motor minimum of 3/4 HP, instant reverse, 1750 RPM, 115 VAC, single phase (220 volt optional). Back-up safety nut and auto-lubrication system.

C. Platform shall be constructed of 12 gauge minimum zinc clad steel. If unit is not installed in a 3” pit, a stationary ramp shall be provided that extends under the lower landing gate/door.

D. Platform side panels must be 42” high (36” residential). Side panel framework shall be a minimum of 1”x 1 1/2”x .065 steel tubing for indoor units and 1x1 1/2x .125 aluminum tubing for outdoor unit. Solid infill panels shall be a minimum of 18 gauge zinc clad steel.

E. Platform Size and Clear Platform Dimensions:

1. Standard: 37 inches x 51 inches clear platform dimensions.

F. Platform Configuration: As indicated on Drawings.

G. The mainframe support tubings shall be a combination of square and rectangular steel tubing with a minimum .120 wall thickness.

H. Carriage arms shall be a minimum of 1”x2” steel flat bar along with 1/2” thick steel flat bar uprights. Cam rollers shall be used for axial carriage guidance and wear pads used for horizontal stability. On Hydraulic units, cam rollers shall be supported by a minimum 6.25#/ft. “T” rail with tongue and groove ends mated at the split sections of the machine tower.

I. Upper and lower limit switches

J. Upper final limit switch

K. Secondary safety nut (Acme Screw).

L. 24V low voltage controls

M. Grounded electrical system

N. Non-skid platform and access ramp

O. Platform safety pan or runway enclosure

P. Emergency stop button

Q. Top and bottom landing gates/doors provided with combination mechanical lock with positive opening electrical contacts. (Local code may vary)

R. Grab rail

S. Machine Tower

1. Acme Screw: Machine tower structural side plates shall be of 12 gauge steel and front and back covers shall be 18 gauge zinc clad steel minimum.

2.3 FINISHES

A. Steel Factory Finish:

1. Powder-Coat Finish: After cleaning and pretreating, apply manufacturer's standard two-coat, baked-on finish consisting of prime coat and thermosetting topcoat to a minimum dry film thickness of 2 mils.

a. Color and Gloss: As selected by Architect from manufacturer's full range.

PART 3 - EXECUTION

3.1 EXAMINATION

A. Examine substrates, areas, and conditions, with Installer present, for compliance with requirements for installation tolerances, critical dimensions, and other conditions affecting performance of the Work.

B. Do not begin installation until substrates have been properly prepared.

C. Verify shaft and machine space are of correct size and within tolerances.

D. Verify required landings and openings are of correct size and within tolerances.

E. Verify electrical rough-in is at correct location.

F. If substrate preparation is the responsibility of another installer, notify Architect of unsatisfactory preparation before proceeding.

3.2 PREPARATION

A. Clean surfaces thoroughly prior to installation.

B. Prepare surfaces using the methods recommended by the manufacturer for achieving the best result for the substrate under the project conditions.

3.3 INSTALLATION

A. Install platform lifts in accordance with applicable regulatory requirements including ASME A 17.1, ASME A 18.1 and the manufacturer's instructions.

B. Install system components and connect to building utilities.

C. Accommodate equipment in space indicated.

D. Startup equipment in accordance with manufacturer’s instructions.

E. Adjust for smooth operation.

3.4 FIELD QUALITY CONTROL

A. Acceptance Testing: On completion of lift installation and before permitting use of lifts, perform acceptance tests as required and recommended by ASME A18.1 and authorities having jurisdiction.

B. Operating Test: In addition to acceptance testing, load lifts to rated capacity and operate continuously for 30 minutes between lowest and highest landings served. Readjust stops, signal equipment, and other devices for accurate stopping and operation of system.

C. Advise Owner, Architect, and authorities having jurisdiction in advance of dates and times tests are to be performed on lifts.

3.5 MAINTENANCE SERVICE

A. Initial Maintenance Service: Beginning at Substantial Completion, maintenance service shall include 12 months' full maintenance by skilled employees of lift Installer. Include quarterly preventive maintenance, repair or replacement of worn or defective components, lubrication, cleaning, and adjusting as required for proper lift operation. Parts and supplies shall be manufacturer's authorized replacement parts and supplies.

3.6 PROTECTION

A. Protect installed products until completion of project.

B. Touch-up, repair or replace damaged products before Substantial Completion.

3.7 DEMONSTRATION

A. Engage a factory-authorized service representative to train Owner's maintenance personnel to adjust, operate, and maintain lifts. Include a review of emergency systems and emergency procedures to be followed at time of operational failure and other building emergencies.

B. Check operation of lifts with Owner's personnel present and before date of Substantial Completion. Determine that operating systems and devices are functioning properly.

C. Check operation of lifts with Owner's personnel present not more than one month before end of warranty period. Determine that operating systems and devices are functioning properly.

END OF SECTION